FINERPOWER
TRANSMISSIONS

Belts & Pulleys

PIX Strongbelt PowerTwistPlus Fenner Drives NU T LINK V-BELTS donl dye EAGLE Polyurethane Belting Aetna

2.1. V-BELTS

Dimensions and Standards 2.1.4
Classical V-Belts 2.1.7
Wedge V-Belts 2.1.8
Cogged (REC) V-Belts 2.1.9
Automotive (Cogged) V-Belts 2.1.10
Automotive (Ribbed) V-Belts 2.1.11
Double Sided V-Belts 2.1.12
FRAS (Fire Resistant Anti Static) V-Belts 2.1.12
Lawn and Garden V-Belts 2.1.13
Poly V-Belts 2.1.14
Banded Belts 2.1.15
Spectra (Centre Corded Raw Edge) V-Belts 2.1.16
Variable Speed V-Belts 2.1.17
Muscle (High Power - Low Maintenance) V-Belts 2.1.18
Terminator (Heavy-duty, Aramid-corded) V-Belts 2.1.19
V-Belt Tensioning 2.1.20
- Pulley Gauges 2.1.20
- Groove Checking Procedure 2.1.20
- Belt Length Measuring Device 2.1.20
- Groove Checking Procedure 2.1.20
- Belt Tension Tester 2.1.21
- Tension Measurement Procedure 2.1.21
- Important Notes 2.1.21

Belt Crossover: Narrow & Wedge Belts 2.1.23

2.2. TIMING BELTS

Classical Timing Belts 2.2.4
- XL Section - Classical Timing Belts 2.2.5
- L Section - Classical Timing Belts 2.2.5
- H Section - Classical Timing Belts 2.2.5

Classical Timing Belts - Precut 2.2.6
- XL Section - Classical Timing Belts Precut 2.2.6
- L Section - Classical Timing Belts Precut 2.2.6
- H Section - Classical Timing Belts Precut 2.2.7

HTD Timing Belts 2.2.8
- 3M HTD Timing Belts 2.2.9
- 5M HTD Timing Belts 2.2.9
- 8M HTD Timing Belts 2.2.10
- 14M HTD Timing Belts 2.2.10

HTD Timing Belts - Precut 2.2.11
- 3M HTD Timing Belts - Precut 2.2.11
- 5M HTD Timing Belts - Precut 2.2.11
- 8M HTD Timing Belts - Precut 2.2.12
- 14M HTD Timing Belts - Precut 2.2.13

Polyurethane Timing Belts 2.2.14
- T2.5 Polyurethane Timing Belts 2.2.14
- T5 Polyurethane Timing Belts 2.2.14
- T10 Polyurethane Timing Belts 2.2.15
- AT5 Polyurethane Timing Belts 2.2.15
- AT10 Polyurethane Timing Belts 2.2.15

Double Sided Timing Belts 2.2.16
- D8M HTD Double Sided Timing Belts 2.2.16
- DT5 Double Sided Timing Belts 2.2.16
- DT10 Double Sided Timing Belts 2.2.16

Open Ended Timing Belts 2.2.17
Timing Belt Clamping Plates 2.2.18

2.3. LINK BELTING & POLY CORD

PowerTwist V Belts 2.3.4
NutLink V Belts 2.3.5
Poly Cord Belts 2.3.6
- Eagle Green 89 Textured 2.3.6
- Eagle Red 85 Quick Connect 2.3.6

Every effort has been taken to ensure that the data listed in this catalogue is correct.
Finer Power Transmissions P/L will not accept liability for any damage or loss caused as a result of the data in this catalogue.

2.4. PULLEYS

Classical Timing Pulleys 2.4.5
XL037 series Classical Timing Pulleys (Pilot Bore) 2.4.5
L050 series Classical Timing Pulleys (Taper Lock) 2.4.6
L100 series Classical Timing Pulleys (Taper Lock) 2.4.7
H100 series Classical Timing Pulleys (Taper Lock) 2.4.8
H150 series Classical Timing Pulleys (Taper Lock) 2.4.9
H200 series Classical Timing Pulleys (Taper Lock) 2.4.10
HTD Timing Pulleys 2.4.11
3M HTD Timing Pulleys (Pilot Bore) 2.4.11
5M HTD Timing Pulleys (Pilot Bore) 2.4.12
HTD Timing Pulley - Types 2.4.14
8M HTD Timing Pulleys (Taper Lock) 2.4.15
14M HTD Timing Pulleys (Taper Lock) 2.4.17
T5 & T10 Timing Pulleys 2.4.19
Mi-Lock Pulleys 2.4.22
V-Pulley Selection 2.4.23
V-Pulley Types 2.4.24
SPA V-Pulleys (Taper Lock) 2.4.25
SPB V-Pulleys (Taper Lock) 2.4.29
SPC V-Pulleys (Taper Lock) 2.4.33
SPZ Pulleys (Taper Lock) 2.4.37
Pilot Bore Pulleys 2.4.40
SPA Pilot Bore Pulleys 2.4.40
SPB Pilot Bore Pulleys 2.4.40
Aluminium V-Pulleys 2.4.41
A Section Aluminium Pulleys 2.4.41
B Section Aluminium Pulleys 2.4.42
M Section Aluminium Pulleys 2.4.44

2.5. IDLERS PULLEYS

V-Belt Idler Pulleys (High Speed) 2.5.6
High Speed Pulleys - Single Row Bearings 2.5.6
V-Belt Idlers 2.5.6
Flat Flanged Idler Pulleys (High Speed) 2.5.7
High Speed Pulleys - Single Row Bearings 2.5.7
Flat Flanged Idlers 2.5.7
High Speed Pulleys - Double Row Bearings 2.5.8
Flat Face Idler Pulleys (High Speed) . . . 2.5.9
High Speed Pulleys - Double Row Bearings 2.5.9
Flat Face Idlers 2.5.9
V-Belt Idler Pulleys (4 Point Heavy Duty) 2.5.10
4 Point Heavy Duty Pulleys 2.5.10
V-Belt Idlers 2.5.10
Round Belt Idler Pulleys (4 Point Heavy Duty) 2.5.11
Round Belt Idlers 2.5.11
Flat Face Idler Pulleys (4 Point Heavy Duty) 2.5.12
4 Point Heavy Duty Pulleys 2.5.12
Flat Face Idlers 2.5.12
Flat Single Flange Idler Pulleys (4 Point Heavy Duty) 2.5.13
Flat Single Flange Idlers 2.5.13
Flat Flanged Idler Pulleys (4 Point Heavy Duty) 2.5.14
Flat Flanged Idlers 2.5.14
Tyre Idler Pulleys 2.5.15
Tyre Idlers 2.5.15
V-Belt Idler Pulleys (Single Row Bearing) 2.5.16
Single Row Bearing Idler Pulleys 2.5.16
V-Belt Idlers 2.5.16
V-Belt Idlers Cont. 2.5.17
Flat Flanged Idler Pulleys (Single Row Bearing) 2.5.18
Single Row Bearing Idler Pulleys 2.5.18
Flat Flanged Idlers 2.5.18
Flat Flanged Idlers Cont. 2.5.19
V-Belt Idler Pulleys (Double Row Bearing) 2.5.20
Double Row Bearing Idler Pulleys 2.5.20
V-Belt Idlers 2.5.20
Flat Flanged Idler Pulleys (Double Row Bearing) 2.5.21
Double Row Bearing Idler Pulleys 2.5.21
Flat Flanged Idlers 2.5.21
Flat Faced Idler Pulleys (Double Row Bearing) 2.5.22
Double Row Bearing Idler Pulleys 2.5.22
Flat Faced Idlers 2.5.22
Flat Face Idlers Cont. 2.5.23
Part Number Index - Aetna 2.5.24
Part Number Index - Don Dye 2.5.25

Every effort has been taken to ensure that the data listed in this catalogue is correct.
Finer Power Transmissions P/L will not accept liability for any damage or loss caused as a result of the data in this catalogue.

FINERPOWER TRANSMISSIONS

PIX Power Transmission Solutions

Driving growth!

V-Belts

V-BELTS

Dimensions and Standards 2.1.4
Classical V-Belts 2.1.7
Wedge V-Belts 2.1.8
Cogged (REC) V-Belts 2.1.9
Automotive (Cogged) V-Belts 2.1.10
Automotive (Ribbed) V-Belts 2.1.11
Double Sided V-Belts 2.1.12
FRAS (Fire Resistant Anti Static) V-Belts 2.1.12
Lawn and Garden V-Belts 2.1.13
Poly V-Belts 2.1.14
Banded Belts 2.1.15
Spectra (Centre Corded Raw Edge) V-Belts 2.1.16
Variable Speed V-Belts 2.1.17
Muscle (High Power - Low Maintenance) V-Belts 2.1.18
Terminator (Heavy-duty, Aramid-corded) V-Belts 2.1.19
V-Belt Tensioning 2.1.20
- Pulley Gauges 2.1.20
- Groove Checking Procedure 2.1.20
- Belt Length Measuring Device 2.1.20
- Groove Checking Procedure 2.1.20
- Belt Tension Tester 2.1.21
- Tension Measurement Procedure 2.1.21
- Important Notes 2.1.21

Belt Crossover: Narrow & Wedge Belts 2.1.23

Every effort has been taken to ensure that the data listed in this catalogue is correct.
Finer Power Transmissions P/L will not accept liability for any damage or loss caused as a result of the data in this catalogue.

WRAPPED V-BELTS

PIX-X'set® CLASSICAL BELTS

Section	Dimensions		Angle (Deg)	Pitch width (Wp)	Standard	Min Pulley Dia.(mm)	Manufacturing Range		Belt Length Factor		
	Tw (mm)	Th (mm)					Min Inch/mm	Max Inch/mm	Lp tp la (mm)	Li to Lp (mm)	Li to La (mm)
8	8.0	5.0	40	6.7	DIN 2215-1975	40	39/990	174/4420	12	19	31
Z	10.0	6.0	40	8.5	IS 2494,BS 3790, ISO 4184	50	9.5/240	176/4470	16	22	38
A	13.0	8.0	40	11.0	IS 2494, BS 3790, ISO 4184	71	13/330	357/90 70	14	36	50
B	17.0	11.0	40	14.0	IS 2494, BS 3790, ISO 4184	112	16/405	900/22860	26	43	69
20	20.0	13.0	40	17.0	DIN 2215-1975	160	31.5/800	900/22860	31	48	79
C	22.0	14.0	40	19.0	IS 2494,BS 3790, ISO 4184	180	31/785	900/22860	32	56	88
25	25.0	16.0	40	21.0	DIN 2215-1975	250	57/1445	900/22860	39	61	100
D	32.0	19.0	40	27.0	IS 2494,BS 3790, ISO 4184	355	44.5/1130	900/22860	40	79	119
E	38.0	23.0	40	32.0	IS 2494	500	90/2285	900/22860	53	92	145

PIX-X'set® WEDGE BELTS

Section	Dimensions		Angle (Deg)	Pitch width (Wp)	Standard	Min Pulley Dia.(mm)	Manufacturing Range		Belt Length Factor			Length Designation
	Tw (mm)	Th (mm)					Min Inch/mm	Max Inch/mm	Lp tp la (mm)	Li to Lp (mm)	Li to La (mm)	
SPZ	10.0	8.0	40	8.5	BS 3790	63	365mm	4000mm	13	37	50	Lp
SPA	13.0	10.0	40	11.0	BS 3790	90	576mm	9110mm	18	45	63	Lp
SPB	17.0	14.0	40	14.0	BS 3790	140	1000mm	16824mm	28	60	88	Lp
19	19.0	15.0	40	16.0	DIN 7753	180	2253mm	9137mm	25	69	94	Lp
SPC	22.0	18.0	40	19.0	BS 3790	224	1861mm	22943mm	30	83	113	Lp

PIX-X'set® NARROW BELTS

Section	Dimensions		Angle (Deg)	Pitch width (Wp)	Standard	Min Pulley Dia. (mm)	Manufacturing Range		Belt Length Factor		
	Tw (mm)	Th (mm)					Min Inch/mm	Max Inch/mm	Lp tp la (mm)	Li to Lp (mm)	Li to La (mm)
3V	9.7	8.0	40	9.7	RMA IP 22	63	19.5/495	160/4064	13	37	50
5V	15.8	14.0	40	15.8	RMA IP 22	140	47/1194	657/16688	25	60	85
8V	25.4	23.0	40	25.4	RMA IP 22	335	100/2540	905/22987	53	92	145

PIX-X'set® MB BANDED BELTS

HA	13.0 mm	10.0 mm	40	15.9	ISO 5291	80 de	33"	280"	Li
HB	17.0 mm	13.0 mm	40	19.0	ISO 5291	130 de	41"	628"	Li
HC	22.0 mm	16.0 mm	40	25.5	ISO 5291	210 de	46"	658"	Li
HD	32.0 mm	21.5 mm	40	37.0	ISO 5291	370 de	90"	658"	Li
HE	38.0 mm	27.0 mm	40	44.5	PIX	520 de	90"	658"	Li
HZ	10.0 mm	8.5 mm	40	10.3	PIX	55 de	45"	171"	Li
HSPZ	10.0 mm	10.0 mm	40	12.0	BS 3790	67 dp	1168 mm	9042 mm	Lp
HSPA	13.0 mm	12.0 mm	40	15.0	BS 3790	100 dp	914 mm	5000 mm	Lp
HSPB	17.0 mm	16.0 mm	40	19.0	BS 3790	160 dp	1778 mm	9144 mm	Lp
HSPC	22.0 mm	20.0 mm	40	25.5	BS 3790	224 dp	2235 mm	16688 mm	Lp
H3V	9.7 mm	10.0 mm	40	10.3	ISO 5290	67 de	35.5"	178"	La
H5V	15.8 mm	16.0 mm	40	17.5	ISO 5290	180 de	48"	660"	La
H8V	25.4 mm	25.0 mm	40	28.6	ISO 5290	317 de	98"	664"	La

PIX-X'tra® CLASSICAL BELTS

ZX	10.0	6.0	36	IS 2494, BS 3790, ISO 4184	40	23"	200"	Li
AX	13.0	8.0	36	IS 2494, BS 3790, ISO 4184	63	22"	200"	Li
BX	17.0	11.0	36	IS 2494, BS 3790, ISO 4184	90	21"	200"	Li
CX	22.0	14.0	36	IS 2494, BS 3790, ISO 4184	140	21"	200"	Li

PIX-X'tra® WEDGE BELTS

XPZ	10.0	8.0	36	BS 3790	56	590 mm	5117 mm	Lp
XPA	13.0	10.0	36	BS 3790	71	590 mm	5125 mm	Lp
XPB	17.0	14.0	36	BS 3790	112	600 mm	5140 mm	Lp
XPC	22.0	18.0	36	BS 3790	180	600 mm	5163 mm	Lp

PIX-X'tra® NARROW BELTS

3VX	9.7	8.0	38	RMA IP 22	56	24"	202"	La
5VX	15.8	14.0	38	RMA IP 22	112	24"	203"	La
8VX	25.4	23.0	38	RMA IP 22	254	98"	200"	La

PIX-X'tra® MB BANDED BELTS

HAX	13.0	10.0	36	IISO 5291	15.9	23.5"	200"	Li
HBX	17.0	13.0	36	ISO 5291	19.0	23.5"	200"	Li
HCX	22.0	16.0	36	ISO 5291	25.5	23.5"	200"	Li
HXPZ	10.0	10.0	36	BS 3790	12.0	600 mm	5080 mm	Lp
HXPA	13.0	12.0	36	BS 3790	15.0	600 mm	5080 mm	Lp
HXPB	17.0	16.0	36	BS 3790	19.0	600 mm	5080 mm	Lp
HXPC	22.0	20.0	36	BS 3790	25.5	600 mm	5080 mm	Lp
H3VX	9.7	10.0	36	ISO 5290	10.3	23.5"	200"	La
H5VX	15.8	16.0	36	ISO 5290	17.5	23.5"	200"	La

Every effort has been taken to ensure that the data listed in this catalogue is correct.
Finer Power Transmissions P/L will not accept liability for any damage or loss caused as a result of the data in this catalogue.

BOOK 2: BELTS & PULLEYS CONTENTS

2.1 V-BELTS CONTENTS

RIBBED BELTS

PIX-X'ceed® INDUSTRIAL POLY V-BELTS

PH	2.9	1.60	13	280 mm	5080 mm
PJ	3.8	2.34	20	280 mm	5080 mm
PK	4.5	3.56	50	280 mm	5080 mm
PL	7.6	4.70	75	280 mm	5080 mm
PM	13.3	9.40	180	280 mm	5080 mm

PIX-X'ceed® DS DOUBLE SIDED POLY V-BELTS

DPK	2 to 13 ribs	1195 mm	3105 mm
DPL	2 to 11 ribs	1200 mm	3105 mm

PIX-X'ceed® EL ELASTICATED POLY V-BELT(PJ)

EL nPJ	2 to 20	600 mm	3105 mm

Note: n = no. of ribs

PIX-X'ceed® HT EPDM POLY V-BELTS

Features:
- Working Temperature up to 130°C.
- Abrasion & Flex cracking resistance is very high.
- Longer service life as compared to regular belts.
- Good dimensional stability.
- Higher power transmission.

Applications:
Automobiles, High Speed Engines.

SPECIAL CONSTRUCTION BELTS

PIX-X'set® PT-0

B (17x14)	17 mm	14 mm	3 mm	85"	658"	Li
B (17x16)	17 mm	16 mm	5 mm	85"	658"	Li
A (13x13)	13 mm	13 mm	5 mm	48"	257"	Li
37 x 25	37 mm	25 mm	5 mm	4064 mm	16713 mm	Lp

PIX-X'set® PT-HC HONEY COMB BELTS

B (17x17)	17 mm	17 mm	6 mm	32"	658"	Li
C (22x20)	22 mm	20 mm	6 mm	38"	658"	Li

PIX-X'set® PT-6

B (17x22)	17 mm	22 mm	11 mm	85"	375"	Li
B (17x26)	17 mm	26 mm	15 mm	66"	375"	Li
B (17x21)	17 mm	21 mm	10 mm	42"	79"	Li
C (22x25)	22 mm	25 mm	11 mm	73"	350"	Li

PIX-X'set® PT-7

37(37x25)	37 mm	25 mm	7 mm	4064 mm	8890 mm	Lp
D (32x26)	32 mm	26 mm	7 mm	142"	633"	Li

PIX-X'set® DS HEXAGONAL BELTS

AA	13.0 mm	10.0 mm	40	IS 11038, ISO 5289	80 mm	43"	260"	Li
BB	17.0 mm	14.0 mm	40	IS 11038, ISO 5289	125 mm	40"	660"	Li
CC	22.0 mm	17.0 mm	40	IS 11038, ISO 5289	224 mm	73"	658"	Li
25	25.0 mm	22.0 mm	40	RMA IP 21, IS 11038, ISO 5289	280 mm	89"	681"	Le

Every effort has been taken to ensure that the data listed in this catalogue is correct.
Finer Power Transmissions P/L will not accept liability for any damage or loss caused as a result of the data in this catalogue.

SPECIAL CONSTRUCTION BELTS

PIX-X'set® HP
HIGH POWER BELTS

PIX-X'tra® HP
HIGH POWER BELTS

FEATURES:
- Enhanced power rating by 20% - 30%
- Enhanced belt life
- Minimal belt stretch

PIX
ARAMID / KEVLAR CORD BELTS

FEATURES:
- High tensile strength
- Low stretch
- Enhanced life

PIX-X'tra® DS
DOUBLE COG BELTS

FEATURES:
- High power transmission capacity
- Better heat dissipation
- Extremely flexible

PIX
ASYMMETRIC BELTS

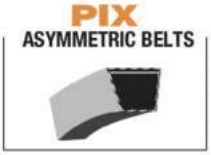

FEATURES:
- Used in torque converter systems
- Used in gold cart, snow mobiles etc.

PIX FRAS BELTS
FIRE RESISTANT & ANTISTATIC BELTS

FEATURES:
- Fire resistant belts
- Antistatic
- Certified by ATEX

PIX-X'tra®
RAW EDGE PLAIN & LAMINATED BELTS

Standards, Dimensions & Product Range:
Same as Raw Edge Moulded Cogged Belts

PIX-X'set® DC
DRY COVER BELTS

FEATURES:
- Available in Aramid / Kevlar Cord
- Suitable for drives with clutch applications

LIGHT DUTY SINGLE V-BELTS

Series	3L	4L	5L
Top width (mm)	10	13	17
Thickness (mm)	6	8	10
Angle (deg)	40	40	40
Range La (inches)	10.5-160	15-360	21-220

Series	2LX	3LX	4LX	5LX
Top width (mm)	6	10	13	17
Thickness (mm)	4	6	8	10
Angle (deg)	38	38	38	38
Range La (inches)	24-201	24-201	24-202	24-202

PIX MUSCLE HP MF BELTS

PIX-X'set® MUSCLE HP MF

FEATURES:
- High power
- Maintenance free
- REACH compliant
- ECO friendly
- Space saving
- Reduced wear
- Smoother running

RAW EDGE COGGED VARIABLE SPEED BELTS

PIX-X'tra® VS VARIABLE SPEED BELTS

V21/6x700-1500	21.0mm	6.0mm	700-1500mm	Li
V28/8x670-1500	28.0mm	8.0mm	670-1500mm	Li
V37/10x800-1800	37.0mm	10.0mm	800-1800mm	Li
V47/13x960-1800	47.0mm	13.0mm	960-1800mm	Li

Every effort has been taken to ensure that the data listed in this catalogue is correct.
Finer Power Transmissions P/L will not accept liability for any damage or loss caused as a result of the data in this catalogue.

A SECTION						
A-17	A-36	A-55	A-74	A-93	A-112	A-131
A-18	A-37	A-56	A-75	A-94	A-113	A-132
A-19	A-38	A-57	A-76	A-95	A-114	A-133
A-20	A-39	A-58	A-77	A-96	A-115	A-134
A-21	A-40	A-59	A-78	A-97	A-116	A-135
A-22	A-41	A-60	A-79	A-98	A-117	A-136
A-23	A-42	A-61	A-80	A-99	A-118	A-137
A-24	A-43	A-62	A-81	A-100	A-119	A-138
A-25	A-44	A-63	A-82	A-101	A-120	A-139
A-26	A-45	A-64	A-83	A-102	A-121	A-140
A-27	A-46	A-65	A-84	A-103	A-122	A-142
A-28	A-47	A-66	A-85	A-104	A-123	A-144
A-29	A-48	A-67	A-86	A-105	A-124	A-148
A-30	A-49	A-68	A-87	A-106	A-125	A-150
A-31	A-50	A-69	A-88	A-107	A-126	A-154
A-32	A-51	A-70	A-89	A-108	A-127	A-158
A-33	A-52	A-71	A-90	A-109	A-128	A-160
A-34	A-53	A-72	A-91	A-110	A-129	A-162
A-35	A-54	A-73	A-92	A-111	A-130	A-173
B SECTION						
B-20	B-46	B-72	B-99	B-125	B-154	B-206
B-21	B-47	B-73	B-100	B-126	B-155	B-208
B-22	B-48	B-74	B-101	B-127	B-158	B-204
B-23	B-49	B-75	B-102	B-128	B-160	B-205
B-24	B-50	B-76	B-103	B-129	B-162	B-210
B-25	B-51	B-77	B-104	B-130	B-164	B-212
B-26	B-52	B-78	B-105	B-131	B-166	B-214
B-27	B-53	B-79	B-106	B-132	B-168	B-215
B-28	B-54	B-80	B-107	B-133	B-170	B-220
B-29	B-55	B-81	B-108	B-134	B-172	B-223
B-30	B-56	B-82	B-109	B-135	B-173	B-225
B-31	B-57	B-83	B-110	B-136	B-174	B-230
B-32	B-58	B-84	B-111	B-137	B-175	B-235
B-33	B-59	B-85	B-112	B-138	B-177	B-236
B-34	B-60	B-86	B-113	B-139	B-180	B-238
B-35	B-61	B-87	B-114	B-140	B-184	B-240
B-36	B-62	B-89	B-115	B-142	B-183	B-255
B-37	B-63	B-90	B-116	B-144	B-187	B-256
B-38	B-64	B-91	B-117	B-145	B-188	B-268
B-39	B-65	B-92	B-118	B-146	B-190	B-270
B-40	B-66	B-93	B-119	B-147	B-193	B-275
B-41	B-67	B-94	B-120	B-148	B-195	B-287
B-42	B-68	B-95	B-121	B-150	B-197	B-290
B-43	B-69	B-96	B-122	B-152	B-199	B-295
B-44	B-70	B-97	B-123	B-154	B-201	B-300
B-45	B-71	B-98	B-124	B-156	B-203	B-394
C SECTION						
C-38	C-60	C-82	C-104	C-126	C-162	C-228
C-39	C-61	C-83	C-105	C-127	C-163	C-238
C-40	C-62	C-84	C-106	C-128	C-164	C-240
C-41	C-63	C-85	C-107	C-129	C-166	C-248
C-42	C-64	C-86	C-108	C-130	C-168	C-253
C-43	C-65	C-87	C-109	C-131	C-170	C-255
C-44	C-66	C-88	C-110	C-132	C-173	C-256
C-45	C-68	C-91	C-114	C-140	C-180	C-286
C-46	C-69	C-92	C-115	C-142	C-185	C-298
C-47	C-70	C-93	C-116	C-144	C-190	C-300
C-48	C-71	C-94	C-117	C-146	C-195	C-328
C-49	C-72	C-95	C-118	C-148	C-204	C-330
C-50	C-73	C-96	C-119	C-150	C-210	C-337
C-51	C-74	C-97	C-120	C-152	C-215	C-358
C-52	C-75	C-98	C-121	C-153	C-216	C-360
C-53	C-76	C-99	C-122	C-154	C-223	C-376
C-54	C-77	C-100	C-123	C-156	C-224	C-418
C-55	C-78	C-101	C-124	C-158	C-225	
C-56	C-79	C-102	C-125	C-160	C-250	
C-57	C-80	C-103	C-133	C-174	C-268	
C-58	C-81	C-111	C-134	C-175	C-270	
C-59	C-89	C-112	C-136	C-176	C-276	
C-67	C-90	C-113	C-138	C-178	C-280	
D SECTION						
D-94	D-136	D-169	D-215	D-260	D-313	D-420
D-97	D-144	D-173	D-220	D-268	D-314	D-475
D-101	D-148	D-175	D-226	D-270	D-330	D-480
D-110	D-150	D-180	D-237	D-275	D-360	D-510
D-112	D-158	D-195	D-240	D-285	D-390	
D-120	D-160	D-206	D-246	D-286	D-410	
D-128	D-162	D-210	D-250	D-300	D-418	
E SECTION						
E-147	E-195	E-240	E-300	E-360	E-440	E-540
E-180	E-210	E-270	E-340	E-420	E-470	
M SECTION						
M-15	M-23	M-31	M-39	M-47	M-55	M-63
M-16	M-24	M-32	M-40	M-48	M-56	M-64
M-17	M-25	M-33	M-41	M-49	M-57	M-65
M-18	M-26	M-34	M-42	M-50	M-58	M-66
M-19	M-27	M-35	M-43	M-51	M-59	
M-20	M-28	M-36	M-44	M-52	M-60	
M-21	M-29	M-37	M-45	M-53	M-61	
M-22	M-30	M-38	M-46	M-54	M-62	

Every effort has been taken to ensure that the data listed in this catalogue is correct.
Finer Power Transmissions P/L will not accept liability for any damage or loss caused as a result of the data in this catalogue.

SPA SECTION									
SPA-775	SPA-1060	SPA-1300	SPA-1550	SPA-1757	SPA-2057	SPA-2332	SPA-2732	SPA-3550	
SPA-800	SPA-1082	SPA-1307	SPA-1557	SPA-1782	SPA-2060	SPA-2360	SPA-2800	SPA-3750	
SPA-825	SPA-1090	SPA-1320	SPA-1582	SPA-1800	SPA-2082	SPA-2382	SPA-2832	SPA-3900	
SPA-832	SPA-1120	SPA-1332	SPA-1600	SPA-1832	SPA-2120	SPA-2430	SPA-2882	SPA-4000	
SPA-850	SPA-1150	SPA-1357	SPA-1607	SPA-1850	SPA-2132	SPA-2432	SPA-2900	SPA-4250	
SPA-875	SPA-1157	SPA-1360	SPA-1632	SPA-1857	SPA-2150	SPA-2450	SPA-2932	SPA-4500	
SPA-900	SPA-1160	SPA-1382	SPA-1650	SPA-1882	SPA-2180	SPA-2500	SPA-2982	SPA-4700	
SPA-925	SPA-1180	SPA-1400	SPA-1657	SPA-1900	SPA-2182	SPA-2532	SPA-3000		
SPA-950	SPA-1200	SPA-1407	SPA-1660	SPA-1907	SPA-2200	SPA-2580	SPA-3100		
SPA-975	SPA-1207	SPA-1450	SPA-1682	SPA-1932	SPA-2207	SPA-2582	SPA-3150		
SPA-982	SPA-1220	SPA-1457	SPA-1700	SPA-1950	SPA-2232	SPA-2607	SPA-3182		
SPA-1000	SPA-1232	SPA-1482	SPA-1725	SPA-1957	SPA-2240	SPA-2632	SPA-3270		
SPA-1030	SPA-1250	SPA-1500	SPA-1732	SPA-2000	SPA-2282	SPA-2650	SPA-3282		
SPA-1032	SPA-1280	SPA-1532	SPA-1750	SPA-2032	SPA-2300	SPA-2682	SPA-3350		

SPB SECTION									
SPB-1250	SPB-1520	SPB-1850	SPB-2200	SPB-2450	SPB-2850	SPB-3350	SPB-4310	SPB-5600	SPB-8000
SPB-1260	SPB-1525	SPB-1900	SPB-2240	SPB-2500	SPB-2900	SPB-3450	SPB-4500	SPB-5680	SPB-8500
SPB-1320	SPB-1540	SPB-1950	SPB-2280	SPB-2530	SPB-2950	SPB-3550	SPB-4560	SPB-5990	SPB-9000
SPB-1340	SPB-1590	SPB-2000	SPB-2310	SPB-2580	SPB-2990	SPB-3650	SPB-4750	SPB-6000	
SPB-1400	SPB-1600	SPB-2020	SPB-2330	SPB-2600	SPB-3000	SPB-3750	SPB-4820	SPB-6300	
SPB-1410	SPB-1650	SPB-2030	SPB-2360	SPB-2640	SPB-3070	SPB-3800	SPB-5000	SPB-6340	
SPB-1430	SPB-1690	SPB-2060	SPB-2400	SPB-2650	SPB-3150	SPB-3870	SPB-5070	SPB-6700	
SPB-1450	SPB-1700	SPB-2120	SPB-2410	SPB-2680	SPB-3170	SPB-4000	SPB-5300	SPB-7100	
SPB-1500	SPB-1750	SPB-2150	SPB-2430	SPB-2800	SPB-3250	SPB-4060	SPB-5310	SPB-7500	
SPB-1510	SPB-1800	SPB-2180	SPB-2440	SPB-2840	SPB-3300	SPB-4250	SPB-5380	SPB-7900	

SPC SECTION									
SPC-2000	SPC-2360	SPC-2800	SPC-3350	SPC-4250	SPC-5600	SPC-6875	SPC-8000	SPC-10600	SPC-16500
SPC-2025	SPC-2380	SPC-3000	SPC-3550	SPC-4500	SPC-6000	SPC-7000	SPC-8500	SPC-11200	SPC-13800
SPC-2100	SPC-2500	SPC-3100	SPC-3750	SPC-4750	SPC-6300	SPC-7100	SPC-9000	SPC-11800	
SPC-2120	SPC-2650	SPC-3150	SPC-3780	SPC-5000	SPC-6500	SPC-7250	SPC-9500	SPC-12500	
SPC-2240	SPC-2750	SPC-3300	SPC-4000	SPC-5300	SPC-6700	SPC-7500	SPC-10000	SPC-13500	

SPZ SECTION									
SPZ-512	SPZ-760	SPZ-940	SPZ-1080	SPZ-1220	SPZ-1362	SPZ-1560	SPZ-1800	SPZ-2120	SPZ-2650
SPZ-562	SPZ-787	SPZ-962	SPZ-1100	SPZ-1237	SPZ-1387	SPZ-1562	SPZ-1837	SPZ-2137	SPZ-2690
SPZ-570	SPZ-800	SPZ-975	SPZ-1112	SPZ-1250	SPZ-1412	SPZ-1587	SPZ-1862	SPZ-2160	SPZ-2840
SPZ-587	SPZ-812	SPZ-987	SPZ-1120	SPZ-1262	SPZ-1420	SPZ-1600	SPZ-1887	SPZ-2187	SPZ-2990
SPZ-612	SPZ-825	SPZ-1000	SPZ-1137	SPZ-1270	SPZ-1437	SPZ-1637	SPZ-1900	SPZ-2240	SPZ-3000
SPZ-630	SPZ-837	SPZ-1010	SPZ-1140	SPZ-1280	SPZ-1450	SPZ-1650	SPZ-1937	SPZ-2250	SPZ-3150
SPZ-662	SPZ-850	SPZ-1024	SPZ-1150	SPZ-1287	SPZ-1462	SPZ-1662	SPZ-1987	SPZ-2280	SPZ-3170
SPZ-670	SPZ-862	SPZ-1030	SPZ-1162	SPZ-1300	SPZ-1470	SPZ-1687	SPZ-2000	SPZ-2287	SPZ-3550
SPZ-687	SPZ-875	SPZ-1037	SPZ-1180	SPZ-1312	SPZ-1487	SPZ-1700	SPZ-2030	SPZ-2360	
SPZ-710	SPZ-900	SPZ-1047	SPZ-1187	SPZ-1320	SPZ-1500	SPZ-1750	SPZ-2037	SPZ-2410	
SPZ-737	SPZ-912	SPZ-1060	SPZ-1190	SPZ-1340	SPZ-1520	SPZ-1762	SPZ-2060	SPZ-2500	
SPZ-750	SPZ-925	SPZ-1077	SPZ-1200	SPZ-1360	SPZ-1537	SPZ-1787	SPZ-2087	SPZ-2540	
SPZ-775	SPZ-950	SPZ-1090	SPZ-1240	SPZ-1400	SPZ-1575	SPZ-1850	SPZ-2140	SPZ-2800	

Every effort has been taken to ensure that the data listed in this catalogue is correct.
Finer Power Transmissions P/L will not accept liability for any damage or loss caused as a result of the data in this catalogue.

AX SECTION											
AX-20	AX-27	AX-34	AX-41	AX-48	AX-55	AX-62	AX-69	AX-76	AX-83	AX-90	AX-97
AX-21	AX-28	AX-35	AX-42	AX-49	AX-56	AX-63	AX-70	AX-77	AX-84	AX-91	AX-98
AX-22	AX-29	AX-36	AX-43	AX-50	AX-57	AX-64	AX-71	AX-78	AX-85	AX-92	AX-99
AX-23	AX-30	AX-37	AX-44	AX-51	AX-58	AX-65	AX-72	AX-79	AX-86	AX-93	AX-100
AX-24	AX-31	AX-38	AX-45	AX-52	AX-59	AX-66	AX-73	AX-80	AX-87	AX-94	AX-105
AX-25	AX-32	AX-39	AX-46	AX-53	AX-60	AX-67	AX-74	AX-81	AX-88	AX-95	AX-136
AX-26	AX-33	AX-40	AX-47	AX-54	AX-61	AX-68	AX-75	AX-82	AX-89	AX-96	AX-144
BX SECTION											
BX-24	BX-32	BX-40	BX-48	BX-56	BX-64	BX-72	BX-80	BX-88	BX-96	BX-112	
BX-25	BX-33	BX-41	BX-49	BX-57	BX-65	BX-73	BX-81	BX-89	BX-97	BX-115	
BX-26	BX-34	BX-42	BX-50	BX-58	BX-66	BX-74	BX-82	BX-90	BX-98	BX-118	
BX-27	BX-35	BX-43	BX-51	BX-59	BX-67	BX-75	BX-83	BX-91	BX-99	BX-120	
BX-28	BX-36	BX-44	BX-52	BX-60	BX-68	BX-76	BX-84	BX-92	BX-100	BX-124	
BX-29	BX-37	BX-45	BX-53	BX-61	BX-69	BX-77	BX-85	BX-93	BX-103	BX-133	
BX-30	BX-38	BX-46	BX-54	BX-62	BX-70	BX-78	BX-86	BX-94	BX-105	BX-144	
BX-31	BX-39	BX-47	BX-55	BX-63	BX-71	BX-79	BX-87	BX-95	BX-108	BX-180	
CX SECTION											
CX-42	CX-51	CX-60	CX-70	CX-78	CX-87	CX-105	CX-116	CX-136	CX-173		
CX-45	CX-56	CX-62	CX-72	CX-81	CX-90	CX-108	CX-120	CX-144	CX-180		
CX-46	CX-57	CX-65	CX-75	CX-83	CX-96	CX-109	CX-125	CX-158			
CX-48	CX-58	CX-68	CX-76	CX-85	CX-100	CX-110	CX-128	CX-166			

XPA SECTION											
XPA-630	XPA-925	XPA-1090	XPA-1232	XPA-1400	XPA-1600	XPA-1900	XPA-2240	XPA-3000			
XPA-800	XPA-950	XPA-1120	XPA-1250	XPA-1430	XPA-1650	XPA-1950	XPA-2360	XPA-3150			
XPA-825	XPA-975	XPA-1140	XPA-1280	XPA-1450	XPA-1700	XPA-2000	XPA-2500	XPA-3350			
XPA-850	XPA-1000	XPA-1150	XPA-1320	XPA-1500	XPA-1750	XPA-2060	XPA-2580	XPA-3550			
XPA-875	XPA-1030	XPA-1180	XPA-1357	XPA-1532	XPA-1800	XPA-2120	XPA-2650	XPA-4000			
XPA-900	XPA-1060	XPA-1220	XPA-1360	XPA-1550	XPA-1850	XPA-2180	XPA-2800				
XPB SECTION											
XPB-1000	XPB-1260	XPB-1410	XPB-1590	XPB-1750	XPB-2000	XPB-2180	XPB-2500	XPB-2800	XPB-3250	XPB-4000	XPB-4820
XPB-1120	XPB-1270	XPB-1450	XPB-1600	XPB-1800	XPB-2020	XPB-2240	XPB-2530	XPB-2840	XPB-3350	XPB-4060	
XPB-1150	XPB-1320	XPB-1500	XPB-1650	XPB-1850	XPB-2060	XPB-2280	XPB-2610	XPB-3000	XPB-3550	XPB-4250	
XPB-1180	XPB-1340	XPB-1525	XPB-1690	XPB-1900	XPB-2120	XPB-2360	XPB-2650	XPB-3150	XPB-3750	XPB-4500	
XPB-1250	XPB-1400	XPB-1550	XPB-1700	XPB-1950	XPB-2150	XPB-2410	XPB-2680	XPB-3170	XPB-3800	XPB-4750	
XPC SECTION											
XPC-2000	XPC-2240	XPC-2500	XPC-2800	XPC-3150	XPC-3550	XPC-4000	XPC-4500	XPC-4900			
XPC-2120	XPC-2360	XPC-2650	XPC-3000	XPC-3350	XPC-3750	XPC-4250	XPC-4750				
XPZ SECTION											
XPZ-610	XPZ-760	XPZ-850	XPZ-950	XPZ-1080	XPZ-1200	XPZ-1280	XPZ-1420	XPZ-1550	XPZ-1750	XPZ-2030	
XPZ-612	XPZ-772	XPZ-875	XPZ-980	XPZ-1090	XPZ-1220	XPZ-1287	XPZ-1450	XPZ-1560	XPZ-1800	XPZ-2160	
XPZ-630	XPZ-787	XPZ-900	XPZ-1000	XPZ-1120	XPZ-1240	XPZ-1320	XPZ-1470	XPZ-1600	XPZ-1850	XPZ-2280	
XPZ-670	XPZ-800	XPZ-910	XPZ-1010	XPZ-1140	XPZ-1250	XPZ-1340	XPZ-1500	XPZ-1637	XPZ-1900	XPZ-2410	
XPZ-710	XPZ-825	XPZ-925	XPZ-1030	XPZ-1150	XPZ-1262	XPZ-1360	XPZ-1520	XPZ-1650	XPZ-1950	XPZ-2650	
XPZ-750	XPZ-830	XPZ-940	XPZ-1060	XPZ-1180	XPZ-1270	XPZ-1400	XPZ-1525	XPZ-1700	XPZ-2000	XPZ-3000	

Every effort has been taken to ensure that the data listed in this catalogue is correct.
Finer Power Transmissions P/L will not accept liability for any damage or loss caused as a result of the data in this catalogue.

10A SECTION									
10A-550	10A-650	10A-675	10A-750						
11A SECTION									
11A-545	11A-760	11A-875	11A-965	11A-1065	11A-1140	11A-1230	11A-1345	11A-1475	11A-1675
11A-610	11A-775	11A-890	11A-980	11A-1070	11A-1145	11A-1245	11A-1360	11A-1485	11A-1700
11A-650	11A-785	11A-900	11A-990	11A-1075	11A-1155	11A-1255	11A-1370	11A-1500	11A-1725
11A-660	11A-800	11A-915	11A-1005	11A-1080	11A-1165	11A-1270	11A-1385	11A-1510	11A-1780
11A-685	11A-815	11A-920	11A-1015	11A-1090	11A-1170	11A-1285	11A-1395	11A-1525	
11A-710	11A-825	11A-925	11A-1030	11A-1095	11A-1180	11A-1295	11A-1410	11A-1550	
11A-725	11A-840	11A-940	11A-1040	11A-1105	11A-1195	11A-1310	11A-1420	11A-1560	
11A-735	11A-850	11A-950	11A-1055	11A-1120	11A-1205	11A-1320	11A-1450	11A-1575	
11A-750	11A-865	11A-955	11A-1060	11A-1130	11A-1220	11A-1335	11A-1460	11A-1600	
13A SECTION									
13A-620	13A-815	13A-940	13A-1040	13A-1130	13A-1220	13A-1320	13A-1420	13A-1560	13A-1725
13A-660	13A-825	13A-950	13A-1050	13A-1135	13A-1230	13A-1325	13A-1425	13A-1575	13A-1755
13A-675	13A-840	13A-955	13A-1055	13A-1140	13A-1245	13A-1335	13A-1435	13A-1585	13A-1780
13A-700	13A-850	13A-965	13A-1060	13A-1145	13A-1250	13A-1345	13A-1440	13A-1590	13A-1805
13A-735	13A-865	13A-975	13A-1065	13A-1150	13A-1255	13A-1350	13A-1450	13A-1600	13A-1830
13A-750	13A-870	13A-980	13A-1070	13A-1155	13A-1260	13A-1370	13A-1460	13A-1625	13A-1840
13A-760	13A-875	13A-990	13A-1080	13A-1170	13A-1270	13A-1375	13A-1475	13A-1640	13A-1855
13A-775	13A-890	13A-1000	13A-1090	13A-1175	13A-1275	13A-1385	13A-1485	13A-1650	13A-1880
13A-785	13A-900	13A-1005	13A-1100	13A-1180	13A-1285	13A-1390	13A-1500	13A-1665	13A-1980
13A-795	13A-915	13A-1015	13A-1105	13A-1195	13A-1295	13A-1395	13A-1525	13A-1675	
13A-800	13A-920	13A-1020	13A-1120	13A-1200	13A-1300	13A-1400	13A-1535	13A-1690	
13A-810	13A-925	13A-1030	13A-1125	13A-1205	13A-1310	13A-1410	13A-1550	13A-1700	

15A SECTION									
15A-815	15A-980	15A-1080	15A-1155	15A-1230	15A-1305	15A-1370	15A-1495	15A-1645	
15A-850	15A-1005	15A-1085	15A-1160	15A-1235	15A-1310	15A-1385	15A-1500	15A-1665	
15A-865	15A-1015	15A-1100	15A-1170	15A-1245	15A-1320	15A-1410	15A-1535	15A-1685	
15A-870	15A-1030	15A-1105	15A-1175	15A-1255	15A-1325	15A-1415	15A-1540	15A-1690	
15A-875	15A-1040	15A-1110	15A-1180	15A-1260	15A-1335	15A-1450	15A-1575	15A-1715	
15A-890	15A-1055	15A-1125	15A-1195	15A-1270	15A-1340	15A-1465	15A-1585	15A-1740	
15A-925	15A-1060	15A-1130	15A-1205	15A-1285	15A-1355	15A-1480	15A-1590	15A-1755	
15A-965	15A-1065	15A-1145	15A-1220	15A-1290	15A-1360	15A-1485	15A-1640	15A-1830	
17A SECTION									
17A-640	17A-925	17A-1030	17A-1140	17A-1210	17A-1795				
17A-800	17A-1015	17A-1065	17A-1160	17A-1625					
20A SECTION									
20A-990	20A-1055	20A-1130	20A-1200	20A-1275	20A-1310	20A-1360	20A-1475		
20A-1020	20A-1075	20A-1155	20A-1220	20A-1295	20A-1325	20A-1395	20A-1500		
20A-1045	20A-1090	20A-1180	20A-1250	20A-1305	20A-1335	20A-1435	20A-1525		

Every effort has been taken to ensure that the data listed in this catalogue is correct.
Finer Power Transmissions P/L will not accept liability for any damage or loss caused as a result of the data in this catalogue.

3PK SECTION (3 RIBS)										
3PK-620	3PK-735	3PK-815	3PK-825	3PK-855	3PK-880	3PK-895	3PK-915	3PK-1055		
3PK-635	3PK-760	3PK-820	3PK-835	3PK-875	3PK-890	3PK-900	3PK-990	3PK-1080		
4PK SECTION (4 RIBS)										
4PK-600	4PK-685	4PK-790	4PK-830	4PK-865	4PK-900	4PK-945	4PK-980	4PK-1040	4PK-1100	4PK-1195
4PK-605	4PK-700	4PK-800	4PK-835	4PK-875	4PK-910	4PK-950	4PK-990	4PK-1050	4PK-1120	4PK-1245
4PK-615	4PK-735	4PK-805	4PK-845	4PK-880	4PK-915	4PK-955	4PK-1000	4PK-1065	4PK-1130	4PK-1325
4PK-620	4PK-760	4PK-810	4PK-850	4PK-885	4PK-925	4PK-960	4PK-1005	4PK-1070	4PK-1145	4PK-1360
4PK-635	4PK-775	4PK-815	4PK-855	4PK-890	4PK-935	4PK-970	4PK-1015	4PK-1080	4PK-1180	
4PK-640	4PK-785	4PK-825	4PK-860	4PK-895	4PK-940	4PK-975	4PK-1030	4PK-1090	4PK-1190	
5PK SECTION (5 RIBS)										
5PK-710	5PK-825	5PK-870	5PK-910	5PK-965	5PK-1010	5PK-1060	5PK-1110	5PK-1170	5PK-1240	5PK-1325
5PK-716	5PK-840	5PK-875	5PK-915	5PK-975	5PK-1015	5PK-1065	5PK-1120	5PK-1195	5PK-1245	5PK-1345
5PK-725	5PK-850	5PK-880	5PK-925	5PK-980	5PK-1030	5PK-1080	5PK-1135	5PK-1205	5PK-1280	5PK-1385
5PK-785	5PK-855	5PK-890	5PK-940	5PK-990	5PK-1040	5PK-1100	5PK-1145	5PK-1210	5PK-1300	5PK-1750
5PK-820	5PK-865	5PK-900	5PK-955	5PK-1000	5PK-1055	5PK-1105	5PK-1165	5PK-1220	5PK-1320	
6PK SECTION (6 RIBS)										
6PK-825	6PK-1095	6PK-1195	6PK-1540	6PK-1750	6PK-2065	6PK-2210	6PK-2325	6PK-2405	6PK-2580	6PK-2825
6PK-870	6PK-1105	6PK-1215	6PK-1555	6PK-1790	6PK-2070	6PK-2225	6PK-2335	6PK-2415	6PK-2590	6PK-2830
6PK-1015	6PK-1107	6PK-1300	6PK-1575	6PK-1855	6PK-2155	6PK-2230	6PK-2345	6PK-2500	6PK-2685	6PK-2845
6PK-1019	6PK-1110	6PK-1320	6PK-1590	6PK-1885	6PK-2160	6PK-2240	6PK-2350	6PK-2510	6PK-2690	6PK-2870
6PK-1035	6PK-1130	6PK-1385	6PK-1625	6PK-1900	6PK-2170	6PK-2275	6PK-2370	6PK-2515	6PK-2720	
6PK-1050	6PK-1165	6PK-1460	6PK-1650	6PK-1980	6PK-2190	6PK-2285	6PK-2375	6PK-2530	6PK-2725	
6PK-1065	6PK-1180	6PK-1510	6PK-1660	6PK-1995	6PK-2200	6PK-2300	6PK-2380	6PK-2553	6PK-2805	
6PK-1080	6PK-1190	6PK-1515	6PK-1740	6PK-2020	6PK-2205	6PK-2315	6PK-2385	6PK-2555	6PK-2810	
7PK SECTION (7 RIBS)										
7PK-597	7PK-990	7PK-1035	7PK-1275	7PK-1345	7PK-1350	7PK-1515	7PK-1580	7PK-1590	7PK-1640	7PK-1925
7PK-1935	7PK-2120	7PK-2120	7PK-2120							
8PK SECTION (8 RIBS)										
8PK-915	8PK-1255	8PK-1400	8PK-1485	8PK-1590	8PK-1660	8PK-1740	8PK-1830	8PK-1955	8PK-2325	
8PK-955	8PK-1285	8PK-1425	8PK-1500	8PK-1600	8PK-1675	8PK-1755	8PK-1840	8PK-1965	8PK-2415	
8PK-1035	8PK-1295	8PK-1435	8PK-1530	8PK-1615	8PK-1690	8PK-1780	8PK-1855	8PK-1980	8PK-2460	
8PK-1170	8PK-1345	8PK-1445	8PK-1535	8PK-1625	8PK-1700	8PK-1800	8PK-1900	8PK-2060	8PK-2630	
8PK-1180	8PK-1365	8PK-1460	8PK-1550	8PK-1640	8PK-1715	8PK-1805	8PK-1910	8PK-2130		
8PK-1230	8PK-1385	8PK-1475	8PK-1575	8PK-1650	8PK-1725	8PK-1820	8PK-1930	8PK-2172		
9PK SECTION (9 RIBS)										
9PK-1175	9PK-2010	9PK-2250								
10PK SECTION (10 RIBS)										
10PK-1470	10PK-1550	10PK-1875	10PK-1880	10PK-2055	10PK-2060					
12PK SECTION (12 RIBS)										
12PK-2215	12PK-2290	12PK-2315	12PK-2367	12PK-2380	12PK-2489					

Every effort has been taken to ensure that the data listed in this catalogue is correct.
Finer Power Transmissions P/L will not accept liability for any damage or loss caused as a result of the data in this catalogue.

DOUBLE SIDED A SECTION						
AA-51	AA-67	AA-75	AA-86	AA-105	AA-113	
AA-55	AA-71	AA-77	AA-90	AA-110		
AA-60	AA-72	AA-80	AA-96	AA-108		
AA-66	AA-73	AA-85	AA-102	AA-112		

DOUBLE SIDED B SECTION						
BB-41	BB-72	BB-93	BB-110	BB-132	BB-173	
BB-45	BB-73	BB-94	BB-112	BB-136	BB-180	
BB-51	BB-75	BB-96	BB-117	BB-144	BB-190	
BB-55	BB-81	BB-97	BB-118	BB-150	BB-195	
BB-60	BB-85	BB-100	BB-120	BB-155	BB-199	
BB-68	BB-88	BB-102	BB-123	BB-158	BB-210	
BB-70	BB-90	BB-105	BB-128	BB-162	BB-270	
BB-71	BB-92	BB-108	BB-130	BB-168		

DOUBLE SIDED C SECTION						
CC-81	CC-104	CC-120	CC-144	CC-162	CC-195	CC-240
CC-90	CC-105	CC-128	CC-148	CC-164	CC-210	CC-360
CC-96	CC-112	CC-140	CC-158	CC-180		

FRAS (Fire Resistant Anti Static) V-Belts

A FRAS SECTION						
A24-FRAS	A34-FRAS	A43-FRAS	A51-FRAS	A59-FRAS	A67-FRAS	A80-FRAS
A25-FRAS	A36-FRAS	A44-FRAS	A52-FRAS	A60-FRAS	A68-FRAS	A85-FRAS
A26-FRAS	A37-FRAS	A45-FRAS	A53-FRAS	A61-FRAS	A69-FRAS	A90-FRAS
A27-FRAS	A38-FRAS	A46-FRAS	A54-FRAS	A62-FRAS	A70-FRAS	
A30-FRAS	A39-FRAS	A47-FRAS	A55-FRAS	A63-FRAS	A72-FRAS	
A31-FRAS	A40-FRAS	A48-FRAS	A56-FRAS	A64-FRAS	A74-FRAS	
A32-FRAS	A41-FRAS	A49-FRAS	A57-FRAS	A65-FRAS	A75-FRAS	
A33-FRAS	A42-FRAS	A50-FRAS	A58-FRAS	A66-FRAS	A79-FRAS	

B FRAS SECTION						
B31-FRAS	B40-FRAS	B48-FRAS	B56-FRAS	B67-FRAS	B80-FRAS	B112-FRAS
B32-FRAS	B42-FRAS	B49-FRAS	B57-FRAS	B68-FRAS	B81-FRAS	B117-FRAS
B33-FRAS	B43-FRAS	B50-FRAS	B59-FRAS	B69-FRAS	B92-FRAS	B131-FRAS
B34-FRAS	B44-FRAS	B52-FRAS	B60-FRAS	B71-FRAS	B93-FRAS	B144-FRAS
B35-FRAS	B45-FRAS	B53-FRAS	B62-FRAS	B74-FRAS	B100-FRAS	
B36-FRAS	B46-FRAS	B54-FRAS	B63-FRAS	B75-FRAS	B103-FRAS	
B38-FRAS	B47-FRAS	B55-FRAS	B64-FRAS	B77-FRAS	B105-FRAS	

C FRAS SECTION						
C52-FRAS	C64-FRAS	C85-FRAS	C112-FRAS	C125-FRAS	C173-FRAS	C240-FRAS
C57-FRAS	C68-FRAS	C90-FRAS	C120-FRAS	C144-FRAS	C222-FRAS	C276-FRAS
C63-FRAS	C81-FRAS	C96-FRAS				

Every effort has been taken to ensure that the data listed in this catalogue is correct.
Finer Power Transmissions P/L will not accept liability for any damage or loss caused as a result of the data in this catalogue.

AK (KEVLAR) SECTION									
AK19	AK33	AK47	AK61	AK75	AK89	AK103	AK117	AK131	AK145
AK20	AK34	AK48	AK62	AK76	AK90	AK104	AK118	AK132	AK146
AK21	AK35	AK49	AK63	AK77	AK91	AK105	AK119	AK133	AK147
AK22	AK36	AK50	AK64	AK78	AK92	AK106	AK120	AK134	AK148
AK23	AK37	AK51	AK65	AK79	AK93	AK107	AK121	AK135	AK149
AK24	AK38	AK52	AK66	AK80	AK94	AK108	AK122	AK136	AK150
AK25	AK39	AK53	AK67	AK81	AK95	AK109	AK123	AK137	AK151
AK26	AK40	AK54	AK68	AK82	AK96	AK110	AK124	AK138	AK152
AK27	AK41	AK55	AK69	AK83	AK97	AK111	AK125	AK139	AK153
AK28	AK42	AK56	AK70	AK84	AK98	AK112	AK126	AK140	AK154
AK29	AK43	AK57	AK71	AK85	AK99	AK113	AK127	AK141	AK155
AK30	AK44	AK58	AK72	AK86	AK100	AK114	AK128	AK142	AK156
AK31	AK45	AK59	AK73	AK87	AK101	AK115	AK129	AK143	AK158
AK32	AK46	AK60	AK74	AK88	AK102	AK116	AK130	AK144	AK160
									AK162

BK (KEVLAR) SECTION									
BK25	BK40	BK55	BK70	BK85	BK100	BK115	BK130	BK146	BK172
BK26	BK41	BK56	BK71	BK86	BK101	BK116	BK131	BK148	BK173
BK27	BK42	BK57	BK72	BK87	BK102	BK117	BK132	BK150	BK175
BK28	BK43	BK58	BK73	BK88	BK103	BK118	BK133	BK152	BK178
BK29	BK44	BK59	BK74	BK89	BK104	BK119	BK134	BK154	BK180
BK30	BK45	BK60	BK75	BK90	BK105	BK120	BK135	BK156	BK182
BK31	BK46	BK61	BK76	BK91	BK106	BK121	BK136	BK157	BK193
BK32	BK47	BK62	BK77	BK92	BK107	BK122	BK137	BK158	BK195
BK33	BK48	BK63	BK78	BK93	BK108	BK123	BK138	BK159	BK300
BK34	BK49	BK64	BK79	BK94	BK109	BK124	BK139	BK160	
BK35	BK50	BK65	BK80	BK95	BK110	BK125	BK140	BK162	
BK36	BK51	BK66	BK81	BK96	BK111	BK126	BK141	BK164	
BK37	BK52	BK67	BK82	BK97	BK112	BK127	BK142	BK166	
BK38	BK53	BK68	BK83	BK98	BK113	BK128	BK143	BK168	
BK39	BK54	BK69	BK84	BK99	BK114	BK129	BK144	BK170	

MK (KEVLAR) SECTION									
MK19	MK24	MK27	MK30	MK33	MK36	MK39	MK42	MK45	
MK22	MK25	MK28	MK31	MK34	MK37	MK40	MK43		
MK23	MK26	MK29	MK32	MK35	MK38	MK41	MK44		

OEM KEVLAR SECTION								
A-265025	A-265494	A-37X57	A-37X86	A-7540355	AK-37X65	MTD-7540281		
A-265124	A-300680	A-37X61	A-37X88	AK-265793	AK-37X74	MTD-7540329A		
A-265488	A-37X40	A-37X62	A-7540280	AK-37X63	AK-7540371A	SPA-DRY-K-2625		

Every effort has been taken to ensure that the data listed in this catalogue is correct.
Finer Power Transmissions P/L will not accept liability for any damage or loss caused as a result of the data in this catalogue.

J-SECTION (POLY-V BELTS - MULTI RIBBED BELTS)

METRIC NUMBER		IMPERIAL NUMBER	METRIC NUMBER		IMPERIAL NUMBER	METRIC NUMBER		IMPERIAL NUMBER
J-	286	112	J -	635	250	J -	1244	490
J-	305	120	J -	660	260	J-	1270	500
J -	330	130	J-	711	280	J-	1285	506
J-	343	135	J-	723	285	J-	1290	508
J -	356	135	J -	762	300	J-	1321	520
J -	360	140	J -	787	310	J-	1355	533
J -	381	150	J -	813	320	J -	1397	550
J -	406	160	J -	838	330	J -	1475	581
J -	432	170	J -	864	340	J -	1549	610
J -	450	177	J -	914	360	J -	1600	630
J -	457	180	J -	965	380	J -	1651	650
J -	483	190	J -	991	390	J -	1752	690
J -	508	200	J -	1016	400	J -	1854	730
J -	533	210	J-	1041	410	J -	1956	770
J -	559	220	J -	1092	430	J -	2083	820
J-	584	230	J -	1143	450	J -	2210	870
J -	610	240	J -	1168	460	J -	2337	920
J -	630	248	J -	1200	472	J -	2489	980

L-SECTION (POLY-V BELTS - MULTI RIBBED BELTS)

METRIC NUMBER		IMPERIAL NUMBER	METRIC NUMBER		IMPERIAL NUMBER	METRIC NUMBER		IMPERIAL NUMBER
L -	1270	500	L -	1981	780	L -	2705	1065
L -	1295	510	L -	2020	795	L -	2921	1150
L -	1397	550	L -	2070	815	L -	2997	1180
L -	1422	560	L -	2095	825	L -	3086	1215
L -	1562	615	L -	2134	840	L -	3124	1230
L -	1613	635	L -	2197	865	L -	3289	1295
L -	1664	655	L -	2235	880	L -	3696	1455
L -	1715	675	L -	2324	915	L -	4051	1595
L -	1764	694	L -	2362	930	L -	4470	1760
L -	1803	710	L -	2476	975			
L -	1841	725	L -	2515	990			
L -	1943	765						

Every effort has been taken to ensure that the data listed in this catalogue is correct.
Finer Power Transmissions P/L will not accept liability for any damage or loss caused as a result of the data in this catalogue.

BOOK 2: BELTS & PULLEYS CONTENTS

2.1 V-BELTS CONTENTS

A SECTION	B SECTION		C SECTION	D SECTION	SPB SECTION	SPC SECTION	3VX* SECTION	5V SECTION	8V SECTION
HA-40	HB-55	HB-102	HC-78	HD-195	HSPB-1750	HSPC-2800	H3VX-400	H5V-600	H8V-2500
HA-42	HB-57	HB-103	HC-90		HSPB-1800	HSPC-3000	H3VX-425	H5V-710	H8V-2360/2
HA-55	HB-60	HB-105	HC-96		HSPB-1900	HSPC-3150	H3VX-450	H5V-850	
HA-62	HB-61	HB-106	HC-105		HSPB-2000	HSPC-3350	H3VX-475	H5V-900	
HA-102	HB-62	HB-107	HC-108		HSPB-2120	HSPC-3550	H3VX-500	H5V-1000	
HA-118	HB-64	HB-108	HC-112		HSPB-2150	HSPC-3750	H3V-530	H5V-1040	
HA-134	HB-65	HB-112	HC-120		HSPB-2240	HSPC-4000	H3V-600	H5V-1060	
	HB-66	HB-116	HC-124		HSPB-2360	HSPC-4250	H3V-670	H5V-1120	
	HB-68	HB-120	HC-128		HSPB-2500	HSPC-4500	H3V-710	H5V-1250	
	HB-71	HB-124	HC-144		HSPB-2650	HSPC-4750	H3V-750	H5V-1320	
	HB-72	HB-126	HC-152		HSPB-2800	HSPC-5000	H3V-800	H5V-1400	
	HB-73	HB-128	HC-158		HSPB-3000	HSPC-5600	H3V-850	H5V-1500	
	HB-75	HB-132	HC-180		HSPB-3150	HSPC-6000	H3V-1250	H5V-1600	
	HB-76	HB-133	HC-185		HSPB-3350	HSPC-6300	H3V-1320	H5V-1700	
	HB-77	HB-136	HC-195		HSPB-3550	HSPC-6700	H3V-1400	H5V-2000	
	HB-78	HB-140	HC-204		HSPB-3750	HSPC-7100	H3V-1600	H5V-2240	
	HB-79	HB-144			HSPB-4000	HSPC-7500		H5V-2650	
	HB-80	HB-148			HSPB-4250	HSPC- 8000		H5V-3000	
	HB-81	HB-152			HSPB-4500	HSPC-9500		H5V-3550	
	HB-82	HB-154			HSPB-4750				
	HB-83	HB-158			HSPB-5000				
	HB-84	HB-162							
	HB-85	HB-166							
	HB-87	HB-173							
	HB-89	HB-180							
	HB-88	HB-188							
	HB-90	HB-190							
	HB-92	HB-195							
	HB-93	HB-210							
	HB-95								
	HB-96								
	HB-97								
	HB-99								

*Previously stock as 3V and transitioning to 3VX (Raw Edge Cogged version).

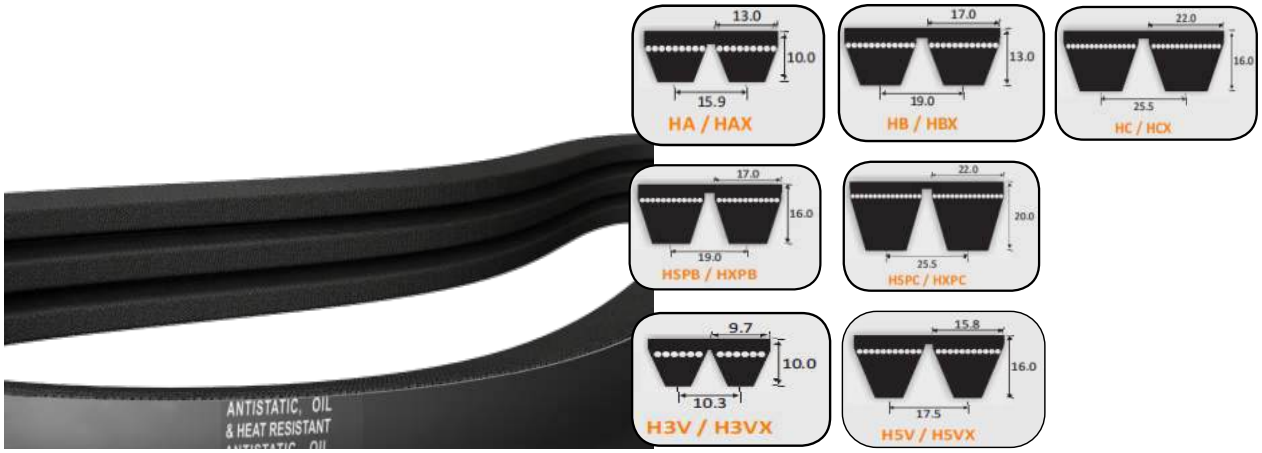

Every effort has been taken to ensure that the data listed in this catalogue is correct.
Finer Power Transmissions P/L will not accept liability for any damage or loss caused as a result of the data in this catalogue.

A-SECTION					
A24S	A40S	A56S	A72S	A88S	A112S
A25S	A41S	A57S	A73S	A89S	A120S
A26S	A42S	A58S	A74S	A90S	A124S
A27S	A43S	A59S	A75S	A91S	A128S
A28S	A44S	A60S	A76S	A92S	A136S
A29S	A45S	A61S	A77S	A93S	A144S
A30S	A46S	A62S	A78S	A94S	A148S
A31S	A47S	A63S	A79S	A95S	A150S
A32S	A48S	A64S	A80S	A96S	A154S
A33S	A49S	A65S	A81S	A97S	A158S
A34S	A50S	A66S	A82S	A98S	A164S
A35S	A51S	A67S	A83S	A100S	A173S
A36S	A52S	A68S	A84S	A102S	A180S
A37S	A53S	A69S	A85S	A103S	
A38S	A54S	A70S	A86S	A105S	
A39S	A55S	A71S	A87S	A110S	

B-SECTION						
B24S	B40S	B56S	B72S	B88S	B105S	B144S
B25S	B41S	B57S	B73S	B89S	B106S	B148S
B26S	B42S	B58S	B74S	B90S	B108S	B150S
B27S	B43S	B59S	B75S	B91S	B110S	B154S
B28S	B44S	B60S	B76S	B92S	B112S	B158S
B29S	B45S	B61S	B77S	B93S	B115S	B162S
B30S	B46S	B62S	B78S	B94S	B116S	B173S
B31S	B47S	B63S	B79S	B95S	B118S	B180S
B32S	B48S	B64S	B80S	B96S	B120S	B191S
B33S	B49S	B65S	B81S	B97S	B123S	B195S
B34S	B50S	B66S	B82S	B98S	B124S	
B35S	B51S	B67S	B83S	B99S	B126S	
B36S	B52S	B68S	B84S	B100S	B128S	
B37S	B53S	B69S	B85S	B101S	B133S	
B38S	B54S	B70S	B86S	B102S	B136S	
B39S	B55S	B71S	B87S	B103S	B140S	

C-SECTION
C128S

Every effort has been taken to ensure that the data listed in this catalogue is correct.
Finer Power Transmissions P/L will not accept liability for any damage or loss caused as a result of the data in this catalogue.

METHOD OF ORDERING		
21	6	700
Top Width (mm)	Tooth Depth (mm)	Inside Length (mm)

VARIABLE SPEED BELTS					
21 X 6 X 700	21 X 6 X 1185	28 X 8 X 900	28 X 8 X 1500	37 X 10 X 1320	47 X 13 X 1180
21 X 6 X 750	21 X 6 X 1250	28 X 8 X 950	37 X 10 X 800	37 X 10 X 1400	47 X 13 X 1250
21 X 6 X 800	21 X 6 X 1320	28 X 8 X 1000	37 X 10 X 850	37 X 10 X 1500	47 X 13 X 1320
22 X 6 X 830	21 X 6 X 1400	28 X 8 X 1060	37 X 10 X 900	37 X 10 X 1600	47 X 13 X 1400
21 X 6 X 850	21 X 6 X 1500	28 X 8 X 1120	37 X 10 X 950	37 X 10 X 1700	47 X 13 X 1500
21 X 6 X 900	28 X 8 X 670	28 X 8 X 1180	37 X 10 X 1000	37 X 10 X 1800	47 X 13 X 1600
21 X 6 X 950	28 X 8 X 700	28 X 8 X 1250	37 X 10 X 1060	47 X 13 X 960	47 X 13 X 1700
21 X 6 X 1000	28 X 8 X 750	28 X 8 X 1320	37 X 10 X 1120	47 X 13 X 1000	47 X 13 X 1800
21 X 6 X 1060	28 X 8 X 800	28 X 8 X 1400	37 X 10 X 1180	47 X 13 X 1060	
21 X 6 X 1150	28 X 8 X 850	28 X 8 X 1450	37 X 10 X 1250	47 X 13 X 1120	

NARROW BELTS (8V SECTION)						
8V-990	8V-1310	8V-1600	8V-1990	8V-2230	8V-2500	8V-3150
8V-1050	8V-1350	8V-1700	8V-2000	8V-2240	8V-2680	8V-3350
8V-1110	8V-1390	8V-1800	8V-2090	8V-2360	8V-2800	8V-3540
8V-1240	8V-1500	8V-1900	8V-2120	8V-2490	8V-3000	8V-3940

BELT & PULLEY MEASURING TOOLS	
PIX-PULLEY-GAUGE	**PIX PULLEYGAUGE**
LM1	BELT LENGTH MEASURER
LM2	RIBBED BELT MEASURER

Belt Length Measurer

Every effort has been taken to ensure that the data listed in this catalogue is correct.
Finer Power Transmissions P/L will not accept liability for any damage or loss caused as a result of the data in this catalogue.

PIX MUSCLE SPB SECTION					
MB-SPB-1250	MB-SPB-1800	MB-SPB-2500	MB-SPB-3550	MB-SPB-5000	MB-SPB-7100
MB-SPB-1320	MB-SPB-1900	MB-SPB-2650	MB-SPB-3750	MB-SPB-5300	MB-SPB-7500
MB-SPB-1400	MB-SPB-2000	MB-SPB-2800	MB-SPB-4000	MB-SPB-5600	MB-SPB-8000
MB-SPB-1500	MB-SPB-2120	MB-SPB-3000	MB-SPB-4250	MB-SPB-6000	
MB-SPB-1600	MB-SPB-2240	MB-SPB-3150	MB-SPB-4500	MB-SPB-6300	
MB-SPB-1700	MB-SPB-2360	MB-SPB-3350	MB-SPB-4750	MB-SPB-6700	

PIX MUSCLE SPC SECTION					
MB-SPC-2000	MB-SPC-2650	MB-SPC-3550	MB-SPC-4750	MB-SPC-6300	MB-SPC-8500
MB-SPC-2120	MB-SPC-2800	MB-SPC-3750	MB-SPC-5000	MB-SPC-6700	MB-SPC-9000
MB-SPC-2240	MB-SPC-3000	MB-SPC-4000	MB-SPC-5300	MB-SPC-7100	MB-SPC-9500
MB-SPC-2360	MB-SPC-3150	MB-SPC-4250	MB-SPC-5600	MB-SPC-7500	MB-SPC-10000
MB-SPC-2500	MB-SPC-3350	MB-SPC-4500	MB-SPC-6000	MB-SPC-8000	

PIX's overwhelming desire to be at the "cutting edge" in this field has culminated in the launch of the MUSCLE range of belts. Put simply, PIX MUSCLE belts are the ultimate V-belt – superhigh power rating, maintenance-free, and eco-friendly.

Years of consultation with customers, and taking into account the new requirements of the changing world we find ourselves in, has resulted in PIX providing the "perfect solution".

MUSCLE belts are produced to comply with the latest REACH directives, RoHS regulations, and exclude all restricted chemicals as listed by the EPA in the US.

The MUSCLE belt compound does not emit any toxic substances during manufacturing or when running in use.

The revolutionary design of the compound performs well in adverse conditions, such as high temperatures, UV or Ozone exposure, and chemically aggressive environments.

MUSCLE shows remarkable performance characteristics in terms of elongation and slippage – minimising energy loss.

Every effort has been taken to ensure that the data listed in this catalogue is correct.
Finer Power Transmissions P/L will not accept liability for any damage or loss caused as a result of the data in this catalogue.

PIX TERMINATOR SPB SECTION					
TR-SPB-1250	TR-SPB-1700	TR-SPB-2360	TR-SPB-3350	TR-SPB-4750	TR-SPB-6700
TR-SPB-1260	TR-SPB-1800	TR-SPB-2500	TR-SPB-3550	TR-SPB-5000	TR-SPB-7100
TR-SPB-1320	TR-SPB-1900	TR-SPB-2650	TR-SPB-3750	TR-SPB-5300	TR-SPB-7500
TR-SPB-1400	TR-SPB-2000	TR-SPB-2800	TR-SPB-4000	TR-SPB-5600	TR-SPB-8000
TR-SPB-1500	TR-SPB-2120	TR-SPB-3000	TR-SPB-4250	TR-SPB-6000	
TR-SPB-1600	TR-SPB-2240	TR-SPB-3150	TR-SPB-4500	TR-SPB-6300	

PIX TERMINATOR SPC SECTION					
TR-SPC-2000	TR-SPC-2650	TR-SPC-3550	TR-SPC-4750	TR-SPC-6300	SPC-8500
TR-SPC-2120	TR-SPC-2800	TR-SPC-3750	TR-SPC-5000	TR-SPC-6700	SPC-9000
TR-SPC-2240	TR-SPC-3000	TR-SPC-4000	TR-SPC-5300	TR-SPC-7100	SPC-9500
TR-SPC-2360	TR-SPC-3150	TR-SPC-4250	TR-SPC-5600	TR-SPC-7500	SPC-10000
TR-SPC-2500	TR-SPC-3350	TR-SPC-4500	TR-SPC-6000	TR-SPC-8000	

Every effort has been taken to ensure that the data listed in this catalogue is correct.
Finer Power Transmissions P/L will not accept liability for any damage or loss caused as a result of the data in this catalogue.

Pulley Gauges

PIX Pulley Gauges are specially designed for checking the profiles of the grooves of various types of pulleys.

Groove Checking Procedure

1. Identify the pulley gauge to be used according to section and its diameter.
2. Measure the groove by inserting the gauge and identify if any clearance lies between the side wall of groove and the gauge.
3. Measure the present clearance using the Feeler Gauge.

Belt Length Measuring Device

PIX Belt Length Measuring Devices are used for determining the length of a belt when the size of the belt is not clearly visible. They can also be used to confirm the size of the belt. The maximum belt length that can be measured is 120 inches or 3050mm.

Groove Checking Procedure

1. Place the belt on the fixed upper half of the pulley.
2. Slide down the lower half of pulley until the belt is sufficently stretched.
3. The markers on the lower position of the bottom half will show the belt length.

Every effort has been taken to ensure that the data listed in this catalogue is correct.
Finer Power Transmissions P/L will not accept liability for any damage or loss caused as a result of the data in this catalogue.

Belt Tension Tester

Proper belt tension is essential for optimum power transmission and vital to the life of the belt. To ensure optimum V-belt drive operation it is recommended to check the tension of the belts by measuring the deflection force value with the help of a tension tester.

Belt tension in most drives can be checked with adequate reliability by using the PIX tension tester.

Tension Measurement Procedure

Measure the span length of the belt in mm.
Tie a string on the two pulleys along witht the length of the belt and mark the centre of the span on the belt.
Calculate 1.5% of the span ("x") for belt length less than 1000mm and 1% of the span for belt length more than 1000mm. Adjust the lower side of the bottom ring on the tension tester to coincide with "x" on the mm scale then adjust the lower side of the top ring to 0.00 N.
Place tension tester at the centre of the span of the belt. Apply force with the help of the tension tester perpendicular to the span until the lower surfce of the bottom ring touches the string.
Take the deflection force value (N) by the lower side of the top ring.
Compare the deflection force value (N) with the values show on the next page - the deflection force should be between the minimum and maxium vales given.
Deflection force less than the minimum recommended value indicates an under tensioned drive.
Deflection force greater than the maximum recommended value indicates an over tensioned drive.

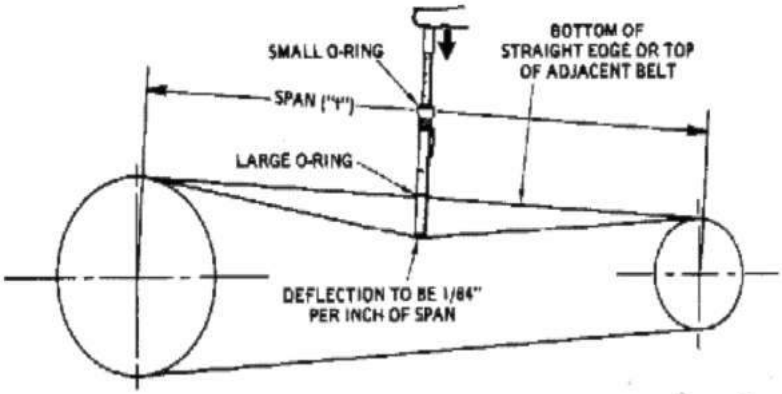

Important

For new belts, deflection force value (N) should be kept at the maximum.
Maximum deflection force value (N) is recommended for pulsating & shock loads.
It is recommended to re-check the tension on new belts after approx. 24 hours of running and if necessary, adjust accordingly.

Notes

Every effort has been taken to ensure that the data listed in this catalogue is correct.
Finer Power Transmissions P/L will not accept liability for any damage or loss caused as a result of the data in this catalogue.

Deflection Force Required for Measuring Tension in V-Belt Drives								
Cross Section		Smaller Pulley Dia (mm)	Condition 1			Condition 2		
			Delfection @ 1.0% of span, if span length is more than 1000 mm			Delfection @ 1.5% of span, if span length is more than 1000 mm		
			Required deflection force F at the centre of span for belt speed			Required deflection force F at the centre of span for belt speed		
			0 m/s to 10 m/s	10 m/s to 20 m/s	20 m/s to 30 m/s	0 m/s to 10 m/s	10 m/s to 20 m/s	20 m/s to 30 m/s
			Range (N)					
Wrapped Belts	**Classical Belts**							
	M	50-100	4-6	4-5	3-4	5-8	5-7	4-5
		100+	6-9	6-7	5-6	8-12	8-9	7-8
	A	71-140	8-12	7-10	6-8	11-16	9-13	8-11
		140+	12-18	10-14	8-12	16-24	13-19	11-16
	B	112-200	16-24	13-19	10-16	21-32	17-25	13-21
		200+	24-35	19-29	16-24	32-47	25-39	21-32
	C	180-400	31-46	26-38	20-31	41-61	35-51	27-41
		400+	46-70	38-58	31-46	61-93	51-77	41-61
	D	315-600	62-90	52-76	42-62	83-120	69-101	56-83
		600+	90-134	76-115	62-90	120-179	101-153	83-120
	E	450-915	108-160	90-137	73-109	144-213	120-183	97-145
		915+	160-240	137-205	109-160	213-320	183-273	145-213
	Wedge Belts							
	SPZ	63-95	8-12	7-10	6-9	11-16	9-13	8-12
		95+	12-17	10-16	9-14	16-23	13-21	12-19
	SPA	90-140	14-20	12-17	10-14	19-27	16-23	13-19
		140+	20-31	17-26	14-22	27-41	23-35	19-29
	SPB	140-265	25-36	20-32	18-27	33-48	27-43	24-36
		265+	36-46	32-41	27-37	48-61	43-55	36-49
	SPC	224-355	46-66	38-58	32-52	61-88	51-77	43-69
		355+	66-85	58-76	52-70	88-113	77-101	69-93
	8V	335-520	81-107	68-90	56-73	108-143	91-120	75-97
		520+	107-167	90-140	73-113	143-223	120-187	97-151
Raw Edge Belts	**Classical Belts**							
	AX	63-140	9-14	8-12	7-9	12-18	11-15	9-12
		140+	14-21	12-16	9-14	18-28	15-21	12-18
	BX	90-200	18-28	15-22	12-18	25-37	20-29	15-25
		200+	28-40	22-33	18-28	37-54	29-44	25-37
	CX	140-400	36-53	30-44	23-36	48-71	40-58	31-48
		400+	53-81	44-67	36-53	71-107	58-89	48-71
	Wedge Belts							
	XPZ	56-95	9-14	8-12	7-10	12-18	11-15	9-14
		95+	14-20	12-18	10-16	18-26	15-25	14-51
	XPA	71-140	16-23	14-20	12-16	21-31	18-26	15-21
		140+	23-36	20-30	16-25	31-48	26-40	21-34
	XPB	112-265	29-41	23-37	21-31	38-55	31-49	28-41
		265+	41-53	37-47	31-43	55-71	49-63	41-57
	XPC	180-355	53-76	44-67	37-60	71-101	58-89	49-80
		355+	76-98	67-87	60-81	101-130	89-117	80-107

Every effort has been taken to ensure that the data listed in this catalogue is correct.
Finer Power Transmissions P/L will not accept liability for any damage or loss caused as a result of the data in this catalogue.

Belt Crossover: Narrow & Wedge Belts

				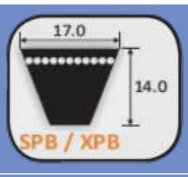					
Belt Designation				Belt Designation				Belt Designation	
SPZ / XPZ	3V / 3VX	SPZ / XPZ	3V / 3VX	SPB / XPB	5V / 5VX	SPB / XPB	5V / 5VX	Metric	8V
630	250	1420	560	1250	-	2840	1120	-	990
670	-	1450	-	1260	500	2850	-	2540	-
710	280	1470	580	1320	-	2900	-	-	1050
750	-	1500	-	1340	530	2990	-	-	1110
760	300	1520	600	1400	-	3000	1180	2840	-
800	315	1560	617	1410	560	3070	-	-	1240
825	-	1600	630	1430	-	3150	-	3180	-
850	335	1650	650	1450	-	3170	1250	-	1310
875	-	1700	670	1500	595	3250	-	-	1390
900	355	1750	-	1510	-	3300	-	3550	-
925	-	1800	710	1520	-	3350	1320	3810	1500
940	370	1850	730	1525	-	3450	-	4060	1600
950	-	1900	750	1540	-	3550	1400	-	1700
975	-	2000	800	1590	-	3750	-	4570	1800
1000	-	2030	-	1600	630	3800	1500	-	1900
1010	400	2120	-	1650	-	4000	-	-	1990
1030	-	2140	-	1700	-	4060	1600	5080	2000
1060	-	2160	850	1750	-	4250	-	-	2090
1080	425	2240	-	1800	710	4310	1700	-	2120
1090	-	2280	900	1850	-	4500	-	5690	2230
1120	-	2360	-	1900	750	4560	1800	-	2360
1140	450	2410	950	1950	-	4750	-	-	2490
1150	-	2500	-	2000	790	4820	1900	6350	2500
1180	-	2540	1000	2020	800	5000	-	-	2680
1190	-	2650	-	2060	-	5070	2000	7100	2800
1200	475	2690	1060	2120	-	5310	-	-	3000
1220	-	2800	-	2150	850	5380	2120	8000	3150
1240	-	2840	1120	2180	-	5600	-	-	3350
1250	-	2990	-	2240	-	5680	2240	9000	3540
1270	500	3000	1180	2280	900	5990	-	-	3940
1280	-	3150	-	2310	-	6000	2360		
1320	-	3170	1250	2360	950	6300	-		
1340	530	3550	1400	2400	-	6340	2500		
1360	-			2410	1000	6700	-		
1400	550			2500	-	7100	2800	Finer Power Transmissions stock the metric range shown in bold. NB. This cross reference is for single belts only - banded belts cannot be interchanged.	
				2530	-	7900	-		
				2640	1060	8000	3150		
				2650	-	8500	-		
				2680	-	9000	-		
				2800	-				

Every effort has been taken to ensure that the data listed in this catalogue is correct.
Finer Power Transmissions P/L will not accept liability for any damage or loss caused as a result of the data in this catalogue.

FINERPOWER TRANSMISSIONS

PIX Power Transmission Solutions

Strongbelt Power Transmission

Timing- Belts

TIMING-BELTS

Classical Timing Belts **2.2.4**
XL Section - Classical Timing Belts 2.2.5
L Section - Classical Timing Belts 2.2.5
H Section - Classical Timing Belts 2.2.5
Classical Timing Belts - Precut **2.2.6**
XL Section - Classical Timing Belts Precut 2.2.6
L Section - Classical Timing Belts Precut 2.2.6
H Section - Classical Timing Belts Precut 2.2.7
HTD Timing Belts **2.2.8**
3M HTD Timing Belts 2.2.9
5M HTD Timing Belts 2.2.9
8M HTD Timing Belts 2.2.10
14M HTD Timing Belts 2.2.10
HTD Timing Belts - Precut **2.2.11**
3M HTD Timing Belts - Precut 2.2.11
5M HTD Timing Belts - Precut 2.2.11
8M HTD Timing Belts - Precut 2.2.12
14M HTD Timing Belts - Precut 2.2.13
Polyurethane Timing Belts **2.2.14**
T2.5 Polyurethane Timing Belts 2.2.14
T5 Polyurethane Timing Belts 2.2.14
T10 Polyurethane Timing Belts 2.2.15
AT5 Polyurethane Timing Belts 2.2.15
AT10 Polyurethane Timing Belts 2.2.15
Double Sided Timing Belts **2.2.16**
D8M HTD Double Sided Timing Belts 2.2.16
DT5 Double Sided Timing Belts 2.2.16
DT10 Double Sided Timing Belts 2.2.16
Open Ended Timing Belts **2.2.17**
Timing Belt Clamping Plates **2.2.18**

Every effort has been taken to ensure that the data listed in this catalogue is correct.
Finer Power Transmissions P/L will not accept liability for any damage or loss caused as a result of the data in this catalogue.

TIMING / SYNCHRONOUS BELTS

PIX-X'act® CT CLASSICAL TIMING BELTS

XL	5.080	130XL - 450XL
L	9.525	124L - 720L
H	12.700	230H - 1700H

BELT DESIGNATION:

PIX-X'act® CT 270 XL XL 025
PIX-X'act® CT 270 XL XL 025

270 XL 025		
270	XL	025
Pitch Length 27"	Section (Tooth pitch 5.080 mm)	Belt Width 0.25"

Note : Maximum sleeve width is available up to 450 mm

PIX-X'act® HTD TIMING BELTS

5M	5.00	330 5M - 2100 5M
8M	8.00	424 8M - 3600 8M
14M	14.00	966 14M - 3850 14M

BELT DESIGNATION:

PIX-X'act® HTD 800 8M 8M 30
PIX-X'act® HTD 800 8M 8M 30

800 8M 30		
800	8M	30
Pitch Length 800 mm	Section (Tooth pitch 8.0 mm)	Belt Width 30 mm

Note : Maximum sleeve width is available up to 450 mm

PIX-X'act® STD TIMING BELTS

S5M	5.00	STD S 5M 375 - STD S 5M 2525
S8M	8.00	STD S 8M 376 - STD S 8M 2600

BELT DESIGNATION:

PIX-X'act® STD S 5M 650 S 5M 15
PIX-X'act® STD S 5M 650 S 5M 15

STD 150 S 5M 650		
STD 150	S 5M	650
Belt Top Width 15 mm	Section (Tooth pitch 5.0 mm)	Pitch Length 650 mm

Note : Maximum sleeve width is available up to 450 mm

PIX-X'act® TOP COAT TIMING BELTS

FEATURES:
- Timing belt with profile top rubber
- Hardness (Shore A 45 & 75) provides excellent cushioning with elasticity

APPLICATIONS:
- Packaging industry

RANGE: Classical Timing Belt "L" section
Other sections can be provided on request.

Every effort has been taken to ensure that the data listed in this catalogue is correct.
Finer Power Transmissions P/L will not accept liability for any damage or loss caused as a result of the data in this catalogue.

XL Section - Classical Timing Belts

Belt	No. Teeth	Belt	No. Teeth	Belt	No. Teeth	Belt	No. Teeth
80 -XL	40	142 -XL	71	210 - XL	105	270 - XL	135
96-XL	48	150 - XL	75	220 - XL	110	280 - XL	140
100 -XL	50	160 - XL	80	230 - XL	115	300 - XL	150
110 -XL	55	170 - XL	85	240 - XL	120	330 - XL	165
120 -XL	60	180 - XL	90	260 - XL	130		
130 -XL	65	190 - XL	95	412 - XL	206		
140 - XL	70	200 - XL	100	450 - XL	225		

L Section - Classical Timing Belts

Belt	No. Teeth	Belt	No. Teeth	Belt	No. Teeth	Belt	No. Teeth
124 - L	33	240 - L	64	330 - L	88	510 - L	136
135 - L	36	255 - L	68	345 - L	92	525 - L	140
150 - L	40	263 - L	70	367 - L	98	540 - L	144
180 - L	48	270 - L	72	390 - L	104	600 - L	160
187 - L	50	285 - L	76	420 - L	112	630 - L	168
203 - L	54	300 - L	80	435 - L	116	720 - L	192
210 - L	56	315 -L	84	450 - L	120		
225 - L	60	322 - L	86	480 - L	128		

H Section - Classical Timing Belts

Belt	No. Teeth	Belt	No. Teeth	Belt	No. Teeth	Belt	No. Teeth
230 - H	46	400 - H	80	630 - H	126	1000 - H	200
240 - H	48	410 - H	82	650 - H	130	1050 - H	210
255 - H	51	420 - H	84	660 - H	132	1100 - H	220
270 - H	54	430 - H	86	670 - H	134	1120 - H	224
280 - H	56	450 - H	90	700 - H	140	1140 - H	228
285 - H	57	465 - H	93	725 - H	145	1150 - H	230
300 - H	60	470 - H	94	730 - H	146	1200 - H	240
320 - H	64	480 - H	96	750 - H	150	1250 - H	250
330 - H	66	490 - H	98	770 - H	154	1325 - H	265
340 - H	68	510 - H	102	800 - H	160	1350 - H	270
350 - H	70	520 - H	104	810 - H	162	1400 - H	280
360 - H	72	540 - H	108	820 - H	164	1450 - H	290
370 - H	74	560 - H	112	850 - H	170	1600 - H	320
375 - H	75	570 - H	114	900 - H	180	1700 - H	340
390 -H	78	600 -H	120	950 -H	190		

Every effort has been taken to ensure that the data listed in this catalogue is correct.
Finer Power Transmissions P/L will not accept liability for any damage or loss caused as a result of the data in this catalogue.

XL Section - Classical Timing Belts Precut

Belts	Descriptions
120-XL-037	Timing Belt Classical PIX 120XL 5.08mm Pitch 60 Teeth 3/8
130-XL-037	Timing Belt Classical PIX 130XL 5.08mm Pitch 65 Teeth 3/8
140-XL-037	Timing Belt Classical PIX 140XL 5.08mm Pitch 70 Teeth 3/8
142-XL-037	Timing Belt Classical PIX 142XL 5.08mm Pitch 71 Teeth 3/8
150-XL-037	Timing Belt Classical PIX 150XL 5.08mm Pitch 75 Teeth 3/8
160-XL-037	Timing Belt Classical PIX 160XL 5.08mm Pitch 80 Teeth 3/8
160-XL-050	Timing Belt Classical PIX 160XL 5.08mm Pitch 80 Teeth 1/2
170-XL-050	Timing Belt Classical PIX 170XL 5.08mm Pitch 85 Teeth 1/2
180-XL-037	Timing Belt Classical PIX 180XL 5.08mm Pitch 90 Teeth 3/8
190-XL-037	Timing Belt Classical PIX 190XL 5.08mm Pitch 95 Teeth 3/8
190-XL-050	Timing Belt Classical PIX 190XL 5.08mm Pitch 95 Teeth 1/2
200-XL-037	Timing Belt Classical PIX 200XL 5.08mm Pitch 100 Teeth 3/8
210-XL-037	Timing Belt Classical PIX 210XL 5.08mm Pitch 105 Teeth 3/8
220-XL-037	Timing Belt Classical PIX 220XL 5.08mm Pitch 110 Teeth 3/8

L Section - Classical Timing Belts Precut

Belts	Descriptions
150-L-037	Timing Belt Classical PIX 150L 3/8
150-L-050	Timing Belt Classical PIX 150L 3/8
203-L-075	Timing Belt Classical PIX 203L 3/8
210-L-050	Timing Belt Classical PIX 210L 3/8
210-L-075	Timing Belt Classical PIX 210L 3/8
210-L-100	Timing Belt Classical PIX 210L 3/8
225-L-050	Timing Belt Classical PIX 225L 3/8
225-L-075	Timing Belt Classical PIX 225L 3/8
225-L-100	Timing Belt Classical PIX 225L 3/8
240-L-075	Timing Belt Classical PIX 240L 3/8
255-L-050	Timing Belt Classical PIX 255L 3/8
255-L-075	Timing Belt Classical PIX 255L 3/8
255-L-100	Timing Belt Classical PIX 255L 3/8
270-L-050	Timing Belt Classical PIX 270L 3/8
270-L-075	Timing Belt Classical PIX 270L 3/8
270-L-100	Timing Belt Classical PIX 270L 3/8
285-L-050	Timing Belt Classical PIX 285L 3/8
285-L-075	Timing Belt Classical PIX 285L 3/8
300-L-100	Timing Belt Classical PIX 300L 3/8
322-L-050	Timing Belt Classical PIX 322L 3/8
322-L-100	Timing Belt Classical PIX 322L 3/8
345-L-050	Timing Belt Classical PIX 345L 3/8

Every effort has been taken to ensure that the data listed in this catalogue is correct.
Finer Power Transmissions P/L will not accept liability for any damage or loss caused as a result of the data in this catalogue.

L Section - Classical Timing Belts Precut

Belts	Descriptions
345-L-100	Timing Belt Classical PIX 345L 3/8
367-L-100	Timing Belt Classical PIX 367L 3/8
390-L-050	Timing Belt Classical PIX 390L 3/8
390-L-100	Timing Belt Classical PIX 390L 3/8
390-L-150	Timing Belt Classical PIX 390L 3/8
390-L-200	Timing Belt Classical PIX 390L 3/8
420-L-150	Timing Belt Classical PIX 420L 3/8
450-L-050	Timing Belt Classical PIX 450L 3/8

H Section - Classical Timing Belts Precut

Belts	Descriptions
1100-H-200	Timing Belt Classical PIX 1100H 1/2
1250-H-200	Timing Belt Classical PIX 1250H 12.7mm or 1/2 Inch Pitch 250 Teeth
240-H-075	Timing Belt Classical PIX 240H 1/2
240-H-100	Timing Belt Classical PIX 240H 1/2
240-H-150	Timing Belt Classical PIX 240H 1/2
270-H-100	Timing Belt Classical PIX 270H 1/2
270-H-150	Timing Belt Classical PIX 270H 1/2
300-H-100	Timing Belt Classical PIX 300H 1/2
300-H-150	Timing Belt Classical PIX 300H 1/2
300-H-200	Timing Belt Classical PIX 300H 1/2
300-H-300	Timing Belt Classical PIX 300H 1/2
330-H-100	Timing Belt Classical PIX 330H 1/2
330-H-150	Timing Belt Classical PIX 330H 1/2
360-H-100	Timing Belt Classical PIX 360H 1/2
420-H-100	Timing Belt Classical PIX 420H 1/2
420-H-150	Timing Belt Classical PIX 420H 1/2
480-H-100	Timing Belt Classical PIX 480H 1/2
480-H-150	Timing Belt Classical PIX 480H 1/2
510-H-100	Timing Belt Classical PIX 510H 1/2
510-H-150	Timing Belt Classical PIX 510H 1/2
540-H-100	Timing Belt Classical PIX 540H 1/2
540-H-150	Timing Belt Classical PIX 540H 1/2
600-H-100	Timing Belt Classical PIX 600H 1/2
600-H-200	Timing Belt Classical PIX 600H 1/2
630-H-100	Timing Belt Classical PIX 630H 1/2
700-H-037	Timing Belt Classical PIX 700H 1/2
700-H-050	Timing Belt Classical PIX 700H 1/2
700-H-200	Timing Belt Classical PIX 700H 1/2
850-H-200	Timing Belt Classical PIX 850H 1/2
900-H-100	Timing Belt Classical PIX 900H 1/2

Every effort has been taken to ensure that the data listed in this catalogue is correct.
Finer Power Transmissions P/L will not accept liability for any damage or loss caused as a result of the data in this catalogue.

The PIX HTD Timing belt is a positive synchronous drive belt. HTD Timing belts have curved teeth, which engage with their pulley. These teeth prevent slip, any slip which does occur is extremely minor and is primarily due to belt stretch or erosion of the grooves. These belts are used for power transfer and for synchronised drives to ensure that the driven pulley is always rotating at a fixed speed ratio to the driving pulley.
Finer Power Transmissions carry a range of PIX HTD Timing belts in 3M, 5M, 8M and 14M

Features

- Modified tooth profile for improved stress distribution
- Reduced tooth jump due to deeper tooth design
- High efficiency due to positive engagement between belt teeth and pulley grooves
- Reduced operating costs due to increase in efficiency
- Lower noise level
- No re-tensioning required
- Free from maintenance
- Increased power transmission capacity
- No high tension required

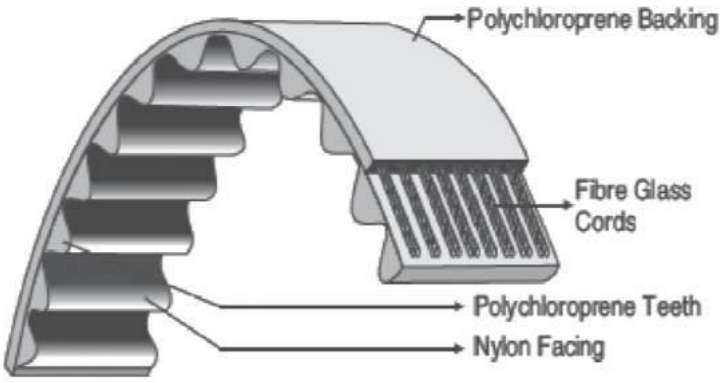

Section	Pitch (B)	Tooth Height (C)	Thickness	FPT Range
3M	3.00	1.1	2.4	111-1569
5M	5.00	2.10	3.80	180-2525
8M	8.00	3.48	6.00	424-2800
14M	14.00	6.25	10.00	966-2800

Every effort has been taken to ensure that the data listed in this catalogue is correct.
Finer Power Transmissions P/L will not accept liability for any damage or loss caused as a result of the data in this catalogue.

3M HTD Timing Belts

Belt	No. Teeth	Belt	No. Teeth	Belt	No. Teeth	Belt	No. Teeth	Belt	No. Teeth	Belt	No. Teeth
111 3M	37	195 3M	65	291 3M	97	384 3M	128	522 3M	174	675 3M	225
129 3M	43	201 3M	67	294 3M	98	390 3M	130	525 3M	175	711 3M	237
141 3M	47	204 3M	68	300 3M	100	420 3M	140	531 3M	177	738 3M	246
144 3M	48	207 3M	69	312 3M	104	426 3M	142	537 3M	179	804 3M	268
150 3M	50	210 3M	70	315 3M	105	447 3M	149	558 3M	186	816 3M	272
165 3M	55	213 3M	71	318 3M	106	462 3M	154	564 3M	188	843 3M	281
168 3M	56	225 3M	75	324 3M	108	474 3M	158	570 3M	190	882 3M	294
171 3M	57	240 3M	80	330 3M	110	480 3M	160	597 3M	199	888 3M	296
174 3M	58	252 3M	84	339 3M	113	486 3M	162	600 3M	200	1062 3M	354
177 3M	59	255 3M	85	345 3M	115	495 3M	165	606 3M	202	1569 3M	523
180 3M	60	267 3M	89	357 3M	119	501 3M	167	615 3M	205		
186 3M	62	285 3M	95	363 3M	121	513 3M	171	633 3M	211		
192 3M	64	288 3M	96	366 3M	122	519 3M	173	669 3M	223		

5M HTD Timing Belts

Belt	No. Teeth	Belt	No. Teeth	Belt	No. Teeth	Belt	No. Teeth	Belt	No. Teeth	Belt	No. Teeth
180 5M	36	385 5M	77	575 5M	115	740 5M	148	940 5M	188	1280 5M	256
225 5M	45	400 5M	80	580 5M	116	745 5M	149	950 5M	190	1380 5M	276
255 5M	51	415 5M	83	590 5M	118	750 5M	150	965 5M	193	1400 5M	280
265 5M	53	420 5M	84	600 5M	120	755 5M	151	975 5M	195	1420 5M	284
270 5M	54	425 5M	85	610 5M	122	775 5M	155	980 5M	196	1425 5M	285
280 5M	56	450 5M	90	615 5M	123	790 5M	158	985 5M	197	1500 5M	300
295 5M	59	460 5M	92	630 5M	126	800 5M	160	1000 5M	200	1595 5M	319
300 5M	60	475 5M	95	635 5M	127	825 5M	165	1025 5M	205	1690 5M	338
305 5M	61	490 5M	98	640 5M	128	830 5M	166	1035 5M	207	1790 5M	358
325 5M	65	500 5M	100	645 5M	129	835 5M	167	1050 5M	210	1800 5M	360
330 5M	66	520 5M	104	650 5M	130	850 5M	170	1100 5M	220	1870 5M	374
340 5M	68	525 5M	105	655 5M	131	860 5M	172	1125 5M	225	1895 5M	379
350 5M	70	535 5M	107	665 5M	133	885 5M	177	1135 5M	227	2000 5M	400
360 5M	72	540 5M	108	670 5M	134	890 5M	178	1160 5M	232	2110 5M	422
365 5M	73	550 5M	110	700 5M	140	900 5M	180	1200 5M	240	2250 5M	450
370 5M	74	560 5M	112	710 5M	142	925 5M	185	1270 5M	254	2350 5M	470
375 5M	75	565 5M	113	720 5M	144	935 5M	187	1275 5M	225	2525 5M	505

Every effort has been taken to ensure that the data listed in this catalogue is correct.
Finer Power Transmissions P/L will not accept liability for any damage or loss caused as a result of the data in this catalogue.

8M HTD Timing Belts

Belt	No. Teeth	Belt	No. Teeth	Belt	No. Teeth	Belt	No. Teeth	Belt	No. Teeth	Belt	No. Teeth
8M-400	50	8M-760	95	8M-1000	125	8M-1264	-	8M-1584	-	8M-2504	313
8M-424	53	8M-776	97	8M-1040	130	8M-1256	157	8M-1600	200	8M-2600	325
8M-480	60	8M-784	98	8M-1056	132	8M-1280	160	8M-1680	210	8M-2800	350
8M-512	64	8M-800	100	8M-1064	133	8M-1304	163	8M-1696	212	8M-3048	-
8M-520	65	8M-824	103	8M-1080	135	8M-1320	-	8M-1728	216	8M-3200	400
8M-560	70	8M-840	105	8M-1096	137	8M-1328	166	8M-1760	220	8M-3280	-
8M-576	72	8M-848	106	8M-1120	140	8M-1344	168	8M-1800	225	8M-3600	450
8M-600	75	8M-856	107	8M-1128	141	8M-1360	170	8M-1904	238	8M-4400	-
8M-608	76	8M-880	110	8M-1152	144	8M-1392	-	8M-1936	242		
8M-624	-	8M-896	112	8M-1160	145	8M-1400	175	8M-2000	250		
8M-632	79	8M-912	114	8M-1168	-	8M-1424	178	8M-2080	260		
8M-640	80	8M-920	115	8M-1184	148	8M-1432	-	8M-2104	263		
8M-656	82	8M-936	-	8M-1200	150	8M-1440	180	8M-2240	280		
8M-680	85	8M-960	120	8M-1216	152	8M-1480	-	8M-2248	281		
8M-712	89	8M-968	121	8M-1224	153	8M-1520	190	8M-2272	284		
8M-720	90	8M-976	122	8M-1248	156	8M-1552	194	8M-2400	300		

14M HTD Timing Belts

Belt	No. Teeth	Belt	No. Teeth	Belt	No. Teeth	Belt	No. Teeth	Belt	No. Teeth	Belt	No. Teeth
14M-966	69	14M-1260	90	14M-1610	115	14M-1890	135	14M-2310	165	14M-3150	225
14M-1092	78	14M-1400	100	14M-1750	125	14M-1960	140	14M-2450	175	14M-3360	240
14M-1120	80	14M-1512	108	14M-1778	127	14M-2100	150	14M-2590	185	14M-3500	250
14M-1190	85	14M-1540	110	14M-1820	130	14M-2240	160	14M-2800	200	14M-3850	-
										14M-4326	309

Every effort has been taken to ensure that the data listed in this catalogue is correct.
Finer Power Transmissions P/L will not accept liability for any damage or loss caused as a result of the data in this catalogue.

3M HTD Timing Belts - Precut

Belts	Descriptions
3M-180-09	Timing Belt HTD PIX 180-3M 3mm Pitch 60 Teeth 9mm Wide
3M-225-09	Timing Belt HTD PIX 225-3M 3mm Pitch 75 Teeth 9mm Wide
3M-225-15	Timing Belt HTD PIX 225-3M 3mm Pitch 75 Teeth 15mm Wide
3M-285-09	Timing Belt HTD PIX 285-3M 3mm Pitch 95 Teeth 9mm Wide
3M-300-09	Timing Belt HTD PIX 300-3M 3mm Pitch 100 Teeth 9mm Wide
3M-324-09	Timing Belt HTD PIX 324-3M 3mm Pitch 108 Teeth 9mm Wide
3M-330-09	Timing Belt HTD PIX 330-3M 3mm Pitch 110 Teeth 9mm Wide
3M-384-09	Timing Belt HTD PIX 384-3M 3mm Pitch 128 Teeth 9mm Wide
3M-390-09	Timing Belt HTD PIX 390-3M 3mm Pitch 130 Teeth 9mm Wide
3M-420-09	Timing Belt HTD PIX 420-3M 3mm Pitch 140 Teeth 9mm Wide
3M-537-09	Timing Belt HTD PIX 537-3M 3mm Pitch 179 Teeth 9mm Wide
3M-669-15	Timing Belt HTD PIX 669-3M 3mm Pitch 223 Teeth 15mm Wide

5M HTD Timing Belts - Precut

Belts	Descriptions
5M-295-09	Timing Belt HTD PIX 295-5M 5mm Pitch 59 Teeth 9mm Wide
5M-300-15	Timing Belt HTD PIX 300-5M 5mm Pitch 60 Teeth 15mm Wide
5M-325-09	Timing Belt HTD PIX 325-5M 5mm Pitch 65 Teeth 9mm Wide
5M-325-15	Timing Belt HTD PIX 325-5M 5mm Pitch 65 Teeth 15mm Wide
5M-325-25	Timing Belt HTD PIX 325-5M 5mm Pitch 65 Teeth 25mm Wide
5M-350-09	Timing Belt HTD PIX 350-5M 5mm Pitch 70 Teeth 9mm Wide
5M-360-15	Timing Belt HTD PIX 360-5M 5mm Pitch 72 Teeth 15mm Wide
5M-375-15	Timing Belt HTD PIX 375-5M 5mm Pitch 75 Teeth 15mm Wide
5M-425-15	Timing Belt HTD PIX 425-5M 5mm Pitch 85 Teeth 15mm Wide
5M-450-15	Timing Belt HTD PIX 450-5M 5mm Pitch 90 Teeth 15mm Wide
5M-475-15	Timing Belt HTD PIX 475-5M 5mm Pitch 95 Teeth 15mm Wide
5M-475-25	Timing Belt HTD PIX 475-5M 5mm Pitch 95 Teeth 25mm Wide
5M-500-15	Timing Belt HTD PIX 500-5M 5mm Pitch 100 Teeth 15mm Wide
5M-535-15	Timing Belt HTD PIX 535-5M 5mm Pitch 107 Teeth 15mm Wide
5M-540-09	Timing Belt HTD PIX 540-5M 5mm Pitch 108 Teeth 9mm Wide
5M-600-15	Timing Belt HTD PIX 600-5M 5mm Pitch 120 Teeth 15mm Wide
5M-700-09	Timing Belt HTD PIX 700-5M 5mm Pitch 140 Teeth 9mm Wide
5M-700-15	Timing Belt HTD PIX 700-5M 5mm Pitch 140 Teeth 15mm Wide
5M-740-15	Timing Belt HTD PIX 740-5M 5mm Pitch 148 Teeth 15mm Wide
5M-755-25	Timing Belt HTD PIX 755-5M 5mm Pitch 151 Teeth 25mm Wide
5M-800-25	Timing Belt HTD PIX 800-5M 5mm Pitch 160 Teeth 25mm Wide
5M-1420-15	Timing Belt HTD PIX 1420-5M 5mm Pitch 284 Teeth 15mm Wide

Every effort has been taken to ensure that the data listed in this catalogue is correct.
Finer Power Transmissions P/L will not accept liability for any damage or loss caused as a result of the data in this catalogue.

8M HTD Timing Belts - Precut

Belts	Descriptions
8M-480-20	Timing Belt HTD PIX 480-8M 8mm Pitch 60 Teeth 20mm Wide
8M-560-15	Timing Belt HTD PIX 560-8M 8mm Pitch 70 Teeth 15mm Wide
8M-600-20	Timing Belt HTD PIX 600-8M 8mm Pitch 75 Teeth 20mm Wide
8M-600-30	Timing Belt HTD PIX 600-8M 8mm Pitch 75 Teeth 30mm Wide
8M-640-20	Timing Belt HTD PIX 640-8M 8mm Pitch 80 Teeth 20mm Wide
8M-640-25	Timing Belt HTD PIX 640-8M 8mm Pitch 80 Teeth 25mm Wide
8M-640-30	Timing Belt HTD PIX 640-8M 8mm Pitch 80 Teeth 30mm Wide
8M-656-20	Timing Belt HTD PIX 656-8M 8mm Pitch 82 Teeth 20mm Wide
8M-720-20	Timing Belt HTD PIX 720-8M 8mm Pitch 90 Teeth 20mm Wide
8M-720-30	Timing Belt HTD PIX 720-8M 8mm Pitch 90 Teeth 30mm Wide
8M-800-20	Timing Belt HTD PIX 800-8M 8mm Pitch 100 Teeth 20mm Wide
8M-800-30	Timing Belt HTD PIX 800-8M 8mm Pitch 100 Teeth 30mm Wide
8M-800-50	Timing Belt HTD PIX 800-8M 8mm Pitch 100 Teeth 50mm Wide
8M-848-25	Timing Belt HTD PIX 848-8M 8mm Pitch 106 Teeth 25mm Wide
8M-856-20	Timing Belt HTD PIX 856-8M 8mm Pitch 107 Teeth 20mm Wide
8M-856-30	Timing Belt HTD PIX 856-8M 8mm Pitch 107 Teeth 30mm Wide
8M-880-30	Timing Belt HTD PIX 880-8M 8mm Pitch 110 Teeth 30mm Wide
8M-896-20	Timing Belt HTD PIX 896-8M 8mm Pitch 112 Teeth 20mm Wide
8M-912-30	Timing Belt HTD PIX 912-8M 8mm Pitch 114 Teeth 30mm Wide
8M-920-30	Timing Belt HTD PIX 920-8M 8mm Pitch 115 Teeth 30mm Wide
8M-960-20	Timing Belt HTD PIX 960-8M 8mm Pitch 120 Teeth 20mm Wide
8M-960-30	Timing Belt HTD PIX 960-8M 8mm Pitch 120 Teeth 30mm Wide
8M-1000-30	Timing Belt HTD PIX 1000-8M 8mm Pitch 125 Teeth 30mm Wide
8M-1040-20	Timing Belt HTD PIX 1040-8M 8mm Pitch 130 Teeth 20mm Wide
8M-1040-30	Timing Belt HTD PIX 1040-8M 8mm Pitch 130 Teeth 30mm Wide
8M-1080-30	Timing Belt HTD PIX 1080-8M 8mm Pitch 135 Teeth 30mm Wide
8M-1120-20	Timing Belt HTD PIX 1120-8M 8mm Pitch 140 Teeth 20mm Wide
8M-1120-30	Timing Belt HTD PIX 1120-8M 8mm Pitch 140 Teeth 30mm Wide
8M-1128-55	Timing Belt HTD PIX 1128-8M 8mm Pitch 141 Teeth 55mm Wide
8M-1168-30	Timing Belt HTD PIX 1168-8M 8mm Pitch 146 Teeth 30mm Wide
8M-1200-20	Timing Belt HTD PIX 1200-8M 8mm Pitch 150 Teeth 20mm Wide
8M-1200-30	Timing Belt HTD PIX 1200-8M 8mm Pitch 150 Teeth 30mm Wide
8M-1280-30	Timing Belt HTD PIX 1280-8M 8mm Pitch 160 Teeth 30mm Wide
8M-1280-50	Timing Belt HTD PIX 1280-8M 8mm Pitch 160 Teeth 50mm Wide
8M-1440-20	Timing Belt HTD PIX 1440-8M 8mm Pitch 180 Teeth 20mm Wide
8M-1440-50	Timing Belt HTD PIX 1440-8M 8mm Pitch 180 Teeth 50mm Wide
8M-1600-20	Timing Belt HTD PIX 1600-8M 8mm Pitch 200 Teeth 20mm Wide
8M-1600-30	Timing Belt HTD PIX 1600-8M 8mm Pitch 200 Teeth 30mm Wide
8M-1760-20	Timing Belt HTD PIX 1760-8M 8mm Pitch 220 Teeth 20mm Wide
8M-1760-30	Timing Belt HTD PIX 1760-8M 8mm Pitch 220 Teeth 30mm Wide
8M-1760-50	Timing Belt HTD PIX 1760-8M 8mm Pitch 220 Teeth 50mm Wide
8M-2000-20	Timing Belt HTD PIX 2000-8M 8mm Pitch 250 Teeth 20mm Wide
8M-2000-30	Timing Belt HTD PIX 2000-8M 8mm Pitch 250 Teeth 30mm Wide
8M-2080-30	Timing Belt HTD PIX 2080-8M 8mm Pitch 260 Teeth 30mm Wide

Every effort has been taken to ensure that the data listed in this catalogue is correct.
Finer Power Transmissions P/L will not accept liability for any damage or loss caused as a result of the data in this catalogue.

8M HTD Timing Belts - Precut

Belts	Descriptions
8M-2248-20	Timing Belt HTD PIX 2248-8M 8mm Pitch 281 Teeth 20mm Wide
8M-2248-30	Timing Belt HTD PIX 2248-8M 8mm Pitch 281 Teeth 30mm Wide
8M-3600-30	Timing Belt HTD PIX 3600-8M 8mm Pitch 450 Teeth 30mm Wide

14M HTD Timing Belts - Precut

Belts	Descriptions
14M-1190-40	Timing Belt HTD PIX 1190-14M 14mm Pitch 85 Teeth 40mm Wide
14M-1540-30	Timing Belt HTD PIX 1540-14M 14mm Pitch 110 Teeth 30mm Wide
14M-2310-50	Timing Belt HTD PIX 2310-14M 14mm Pitch 165 Teeth 50mm Wide
14M-2590-50	Timing Belt HTD PIX 2590-14M 14mm Pitch 185 Teeth 50mm Wide
14M-2800-40	Timing Belt HTD PIX 2800-14M 14mm Pitch 200 Teeth 40mm Wide

Every effort has been taken to ensure that the data listed in this catalogue is correct.
Finer Power Transmissions P/L will not accept liability for any damage or loss caused as a result of the data in this catalogue.

Timing belts made of Polyurethane with steel lacing tension cord and trapezoid formed teeth.

Applications:

Type T2.5: power transmission up to 0.5 kW, electro mechanical design, e.g. film cameras
Type T5: power transmission up to 2 kW, e.g. grinding, kitchen and office machines
Type T10: power transmission up to 20 kW, e.g. textile, printing and tool machines, pumps, compressors, bellows
Finer Power Transmissions stocks a range of Strongbelt sleeves, these are cut to ordered widths.

T2.5 Polyurethane Timing Belts

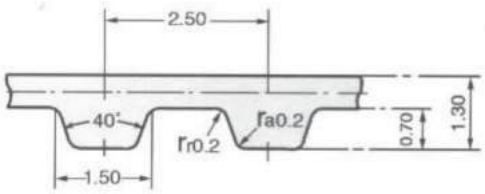

Belt Length	Teeth	Belt Length	Teeth	Belt Length	Teeth	Belt Length	Teeth	Belt Length	Teeth	Belt Length	Teeth
120	48	200	80	277.5	111	330	132	500	200	915	366
145	58	210	84	285	114	342.5	137	540	216	950	380
160	64	230	92	290	116	380	152	600	240		
177.5	71	245	98	305	122	420	168	650	260		
180	72	265	106	317.5	127	480	192	780	312		

T5 Polyurethane Timing Belts

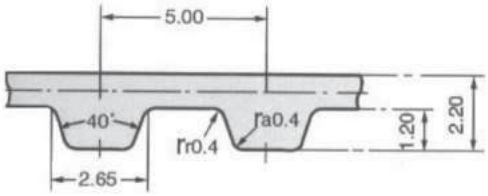

Belt Length	Teeth	Belt Length	Teeth	Belt Length	Teeth	Belt Length	Teeth	Belt Length	Teeth	Belt Length	Teeth
165	33	305	61	430	86	590	118	780	156	1140	228
185	37	320	64	440	88	600	120	800	160	1160	232
200	40	325	65	445	89	610	122	815	163	1200	240
215	43	330	66	450	90	620	124	830	166	1215	243
220	44	340	68	455	91	625	125	840	168	1275	255
225	45	350	70	460	92	630	126	850	170	1280	256
245	49	355	71	475	95	640	128	860	172	1315	263
250	50	360	72	480	96	650	130	885	177	1350	270
255	51	365	73	500	100	660	132	900	180	1355	271
260	52	375	75	510	102	675	135	940	188	1380	276
270	54	390	78	525	105	690	138	990	198	1440	288
275	55	400	80	545	109	700	140	1000	200	1955	-
280	56	410	82	550	110	720	144	1075	215-		
295	59	420	84	560	112	725	145	1100	220		
300	60	425	85	575	115	750	150	1115	223		

Every effort has been taken to ensure that the data listed in this catalogue is correct.
Finer Power Transmissions P/L will not accept liability for any damage or loss caused as a result of the data in this catalogue.

T10 Polyurethane Timing Belts

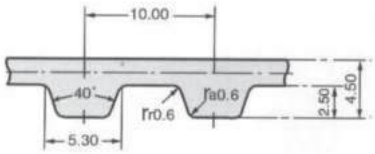

Belt Length	Teeth	Belt Length	Teeth	Belt Length	Teeth	Belt Length	Teeth	Belt Length	Teeth	Belt Length	Teeth
260	26	560	56	780	78	950	95	1200	120	1460	146
320	32	600	60	800	80	960	96	1210	121	1500	150
350	35	610	61	810	81	970	97	1240	124	1560	156
370	37	630	63	800	80	980	98	1250	125	1600	160
400	40	650	65	810	81	1000	100	1300	130	1610	161
410	41	660	66	840	84	1010	101	1320	132	1700	170
440	44	680	68	850	85	1050	105	1350	135	1750	175
450	45	690	69	880	88	1080	108	1390	139	1780	178
480	48	700	70	890	89	1100	110	1400	140	1800	180
500	50	720	72	900	90	1110	111	1420	142	1880	188
530	53	730	73	910	91	1140	114	1440	144	1960	196
550	55	750	75	920	92	1150	115	1450	145	2250	225

AT5 Polyurethane Timing Belts

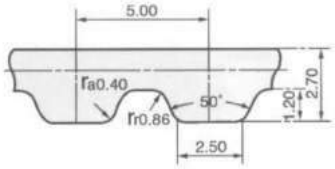

Belt Length	Teeth	Belt Length	Teeth	Belt Length	Teeth	Belt Length	Teeth	Belt Length	Teeth
225	45	390	78	600	120	750	150	1125	225
255	51	420	84	610	122	780	156	1500	300
280	56	450	90	630	126	825	165	2000	400
300	60	455	91	660	132	860	172		
340	68	500	100	710	142	975	195		
375	75	545	109	720	144	1050	210		

AT10 Polyurethane Timing Belts

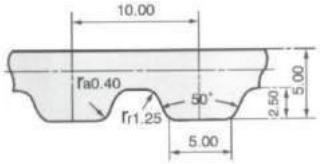

Belt Length	Teeth	Belt Length	Teeth	Belt Length	Teeth	Belt Length	Teeth	Belt Length	Teeth
500	50	800	80	1010	101	1300	130	1700	170
530	53	810	81	1050	105	1320	132	1720	172
560	56	840	84	1080	108	1350	135	1800	180
600	60	880	88	1100	110	1360	136	1860	186
610	61	890	89	1150	115	1400	140	1940	194
660	66	920	92	1200	120	1420	142		
700	70	960	96	1210	121	1480	148		
730	73	980	98	1250	125	1500	150		
780	78	1000	100	1280	128	1600	160		

Every effort has been taken to ensure that the data listed in this catalogue is correct.
Finer Power Transmissions P/L will not accept liability for any damage or loss caused as a result of the data in this catalogue.

D8M HTD Double Sided Timing Belts

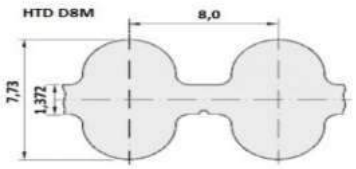

Belt	Teeth	Belt	Teeth	Belt	Teeth	Belt	Teeth	Belt	Teeth	Belt	Teeth
D8M-1152	144	D8M-1312	164	D8M-1424	178	D8M-1680	210	D8M-1920	240	D8M-2272	284
D8M-1160	145	D8M-1320	165	D8M-1432	179	D8M-1696	212	D8M-1928	241	D8M-2304	288
D8M-1168	146	D8M-1328	166	D8M-1440	180	D8M-1728	216	D8M-1936	242	D8M-2328	291
D8M-1184	148	D8M-1344	168	D8M-1456	182	D8M-1744	218	D8M-1952	244	D8M-2392	299
D8M-1192	149	D8M-1352	169	D8M-1464	183	D8M-1752	219	D8M-1992	249	D8M-2400	300
D8M-1200	150	D8M-1360	170	D8M-1480	185	D8M-1760	220	D8M-2000	250	D8M-2456	307
D8M-1208	151	D8M-1320	165	D8M-1512	189	D8M-1784	223	D8M-2056	257	D8M-2504	313
D8M-1216	152	D8M-1328	166	D8M-1520	190	D8M-1792	224	D8M-2080	260	D8M-2584	323
D8M-1224	153	D8M-1344	168	D8M-1536	192	D8M-1800	225	D8M-2096	262	D8M-2600	325
D8M-1240	155	D8M-1352	169	D8M-1552	194	D8M-1824	228	D8M-2104	263	D8M-2656	332
D8M-1248	156	D8M-1360	170	D8M-1560	195	D8M-1840	230	D8M-2136	267	D8M-2736	342
D8M-1256	157	D8M-1376	172	D8M-1576	197	D8M-1856	232	D8M-2160	270	D8M-2800	350
D8M-1264	158	D8M-1384	173	D8M-1584	198	D8M-1880	235	D8M-2200	275		
D8M-1272	159	D8M-1392	174	D8M-1600	200	D8M-1888	236	D8M-2208	276		
D8M-1280	160	D8M-1400	175	D8M-1640	205	D8M-1896	237	D8M-2240	280		
D8M-1304	163	D8M-1416	177	D8M-1648	206	D8M-1904	238	D8M-2248	281		

DT5 Double Sided Timing Belts

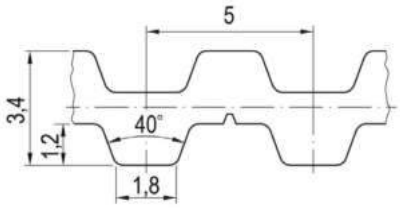

Belt	Teeth	Belt	Teeth	Belt	Teeth	Belt	Teeth	Belt	Teeth	Belt	Teeth
DT5-150	30	DT5-410	82	DT5-500	100	DT5-600	120	DT5-700	140	DT5-860	172
DT5-300	60	DT5-450	90	DT5-515	103	DT5-620	124	DT5-750	150	DT5-900	180
DT5-350	70	DT5-460	92	DT5-550	110	DT5-625	125	DT5-800	160	DT5-940	188
DT5-400	80	DT5-480	96	DT5-590	118	DT5-650	130	DT5-815	163	DT5-1100	220

DT10 Double Sided Timing Belts

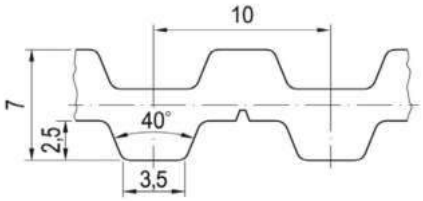

Belt	Teeth	Belt	Teeth	Belt	Teeth	Belt	Teeth	Belt	Teeth	Belt	Teeth
DT10-260	26	DT10-700	70	DT10-900	90	DT10-1210	121	DT10-1350	135	DT10-1610	161
DT10-530	53	DT10-720	72	DT10-980	98	DT10-1240	124	DT10-1400	140	DT10-1700	170
DT10-600	60	DT10-750	75	DT10-1000	100	DT10-1250	125	DT10-1420	142	DT10-1800	180
DT10-630	63	DT10-800	80	DT10-1100	110	DT10-1300	130	DT10-1500	150	DT10-1880	188
DT10-660	66	DT10-840	84	DT10-1200	120	DT10-1320	132	DT10-1600	160		

Every effort has been taken to ensure that the data listed in this catalogue is correct.
Finer Power Transmissions P/L will not accept liability for any damage or loss caused as a result of the data in this catalogue.

Section	Pitch	Tooth Height	Thickness	Cross Section	Roll Length
5M	5.00	2.10	3.8	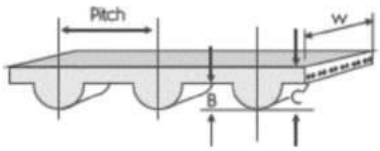	50
8M	8.00	3.48	6.0	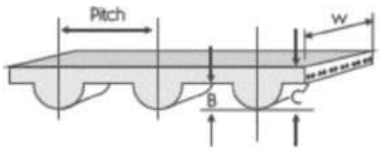	50
T5	5.00	1.2	2.2	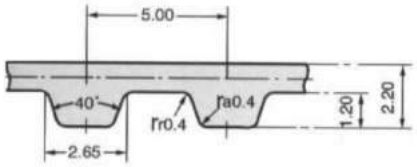	50
T10	10.00	2.5	4.5	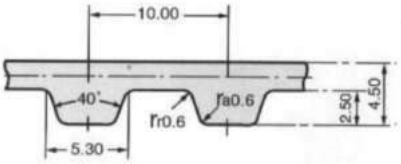	50
AT5	5.00	1.2	2.7	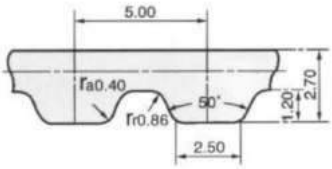	50
AT10	10.00	2.5	5	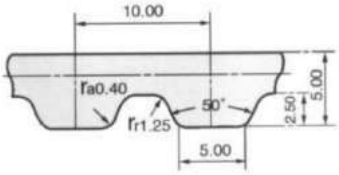	50
XL	5.080	1.27	2.3	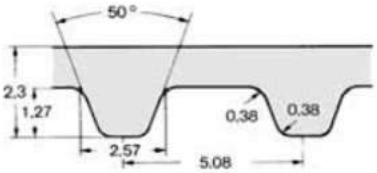	50
L	9.525	1.91	3.6	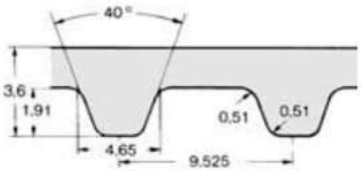	50
H	12.70	2.29	4.3	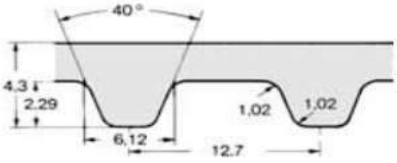	50

Every effort has been taken to ensure that the data listed in this catalogue is correct.
Finer Power Transmissions P/L will not accept liability for any damage or loss caused as a result of the data in this catalogue.

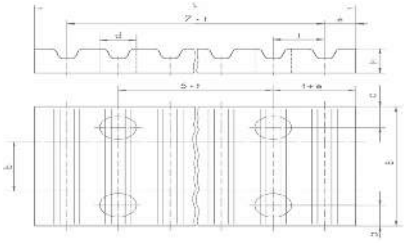

Part No.	Material	Pitch t (mm)	b (mm)	B (mm)	a (mm)	L (mm)	e (mm)	H (mm)	d (mm)	Weight (kg)
5M SECTION										
CP-5M-15	AL	5.000	15	34.0	6.00	41.80	3.20	15.00	8.00	0.022
CP-5M-25	AL	5.000	25	44.0	6.00	41.80	3.20	15.00	8.00	0.030
8M SECTION										
CP-8M-20	AL	8.000	20	45.0	8.00	66.00	3.50	15.00	9.00	0.100
CP-8M-25	AL	8.000	25	50.0	8.00	66.00	3.50	15.00	9.00	0.110
CP-8M-30	AL	8.000	30	55.0	8.00	66.00	3.50	15.00	9.00	0.120
CP-8M-50	AL	8.000	50	75.0	8.00	66.00	3.50	15.00	9.00	0.170
T5 SECTION										
CP-T5-16	AL	5.000	16	35.0	6.00	41.80	3.20	8.00	5.50	0.030
CP-T5-25	AL	5.000	25	44.0	6.00	41.80	3.20	8.00	5.50	0.036
CP-T5-32	AL	5.000	32	51.0	6.00	41.80	3.20	8.00	5.50	0.042
CP-T5-50	AL	5.000	50	69.0	6.00	41.80	3.20	8.00	5.50	0.051
T10 SECTION										
CP-T10-25	AL	10.000	25	50.0	8.00	80.00	5.00	15.00	9.00	0.140
CP-T10-32	AL	10.000	32	57.0	8.00	80.00	5.00	15.00	9.00	0.160
CP-T10-50	AL	10.000	50	75.0	8.00	80.00	5.00	15.00	9.00	0.215
AT5 SECTION										
CP-AT5-16	AL	5.000	16	35.0	6.00	41.80	3.20	8.00	5.50	0.024
CP-AT5-25	AL	5.000	25	44.0	6.00	41.80	3.20	8.00	5.50	0.031
AT10 SECTION										
CP-AT10-25	AL	10.000	25	50.0	8.00	80.00	5.00	15.00	9.00	0.135
CP-AT10-32	AL	10.000	32	57.0	8.00	80.00	5.00	15.00	9.00	0.155
CP-AT10-50	AL	10.000	50	75.0	8.00	80.00	5.00	15.00	9.00	0.205
XL SECTION										
CP-XL-037	AL	5.080	9.53	28.5	6.00	42.50	3.50	8.00	5.55	0.025
CP-XL-050	AL	5.080	12.70	32.0	6.00	42.50	3.50	8.00	5.55	0.027
CP-XL-075	AL	5.080	19.05	38.0	6.00	42.50	3.50	8.00	5.55	0.032
L SECTION										
CP-L-037	AL	9.525	9.53	36.0	8.00	76.60	5.00	15.00	9.00	0.095
CP-L-050	AL	9.525	12.70	39.0	8.00	76.60	5.00	15.00	9.00	0.104
CP-L-075	AL	9.525	19.05	45.0	8.00	76.60	5.00	15.00	9.00	0.121
CP-L-100	AL	9.525	25.40	51.5	8.00	76.60	5.00	15.00	9.00	0.140
CP-L-150	AL	9.525	38.10	64.0	8.00	76.60	5.00	15.00	9.00	0.177
H SECTION										
CP-H-050	AL	9.525	12.70	45.0	10.00	106.90	9.00	22.00	11.00	0.050
CP-H-075	AL	9.525	19.05	51.0	10.00	106.90	9.00	22.00	11.00	0.075
CP-H-100	AL	9.525	25.40	57.5	10.00	106.90	9.00	22.00	11.00	0.100
CP-H-150	AL	9.525	38.10	70.0	10.00	106.90	9.00	22.00	11.00	0.150

Every effort has been taken to ensure that the data listed in this catalogue is correct.
Finer Power Transmissions P/L will not accept liability for any damage or loss caused as a result of the data in this catalogue.

FINERPOWER TRANSMISSIONS

Fenner Drives®

NUTLINK V-BELTS

EAGLE Polyurethane Belting

PowerTwist Plus V-BELTS In Action

Link Belting & Poly Cord (FennerDrives)

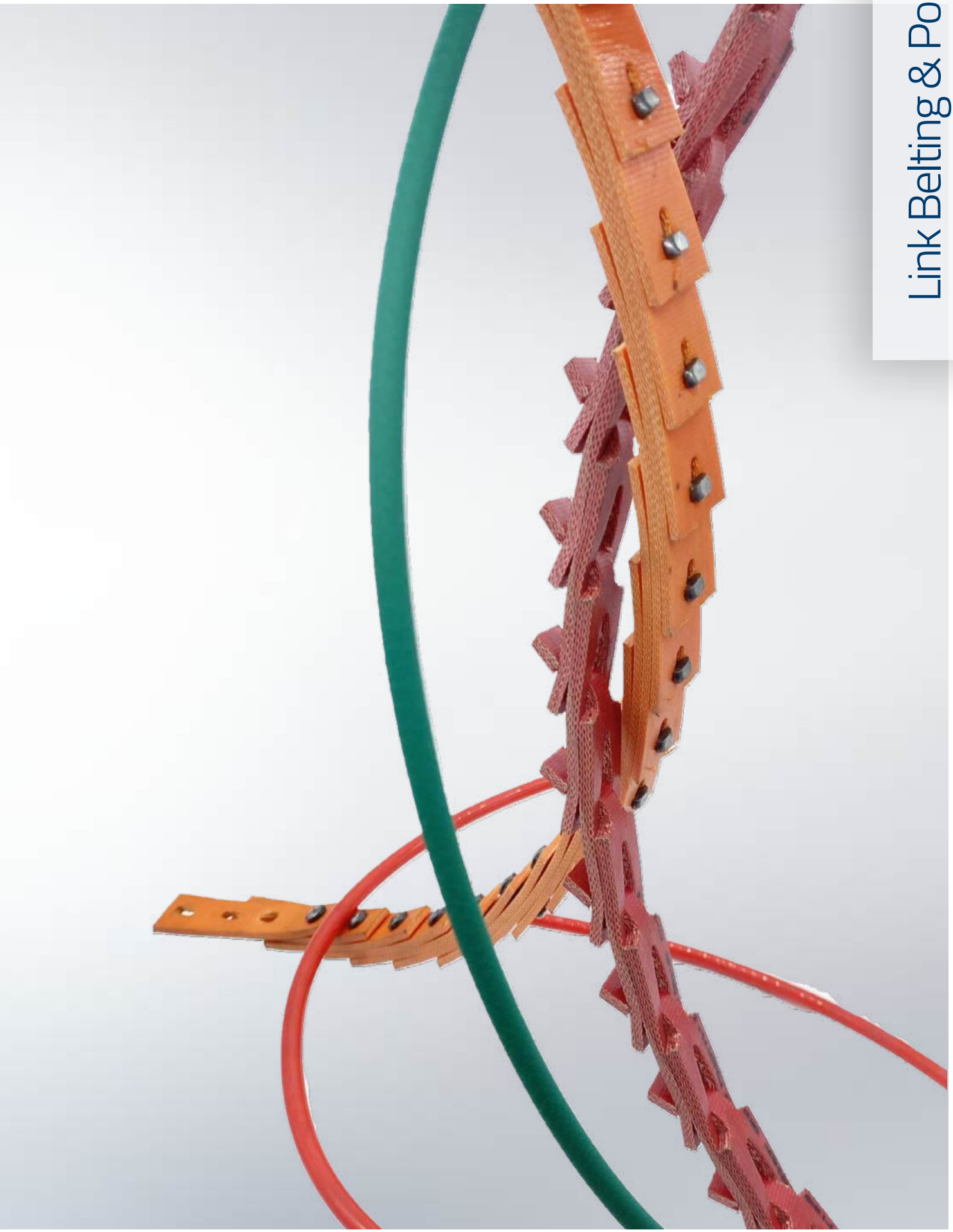

LINK BELTING & POLY CORD

PowerTwist V Belts **2.3.4**
NutLink V Belts **2.3.5**
Poly Cord Belts **2.3.6**
Eagle Green 89 Textured 2.3.6
Eagle Red 85 Quick Connect 2.3.6

Every effort has been taken to ensure that the data listed in this catalogue is correct.
Finer Power Transmissions P/L will not accept liability for any damage or loss caused as a result of the data in this catalogue.

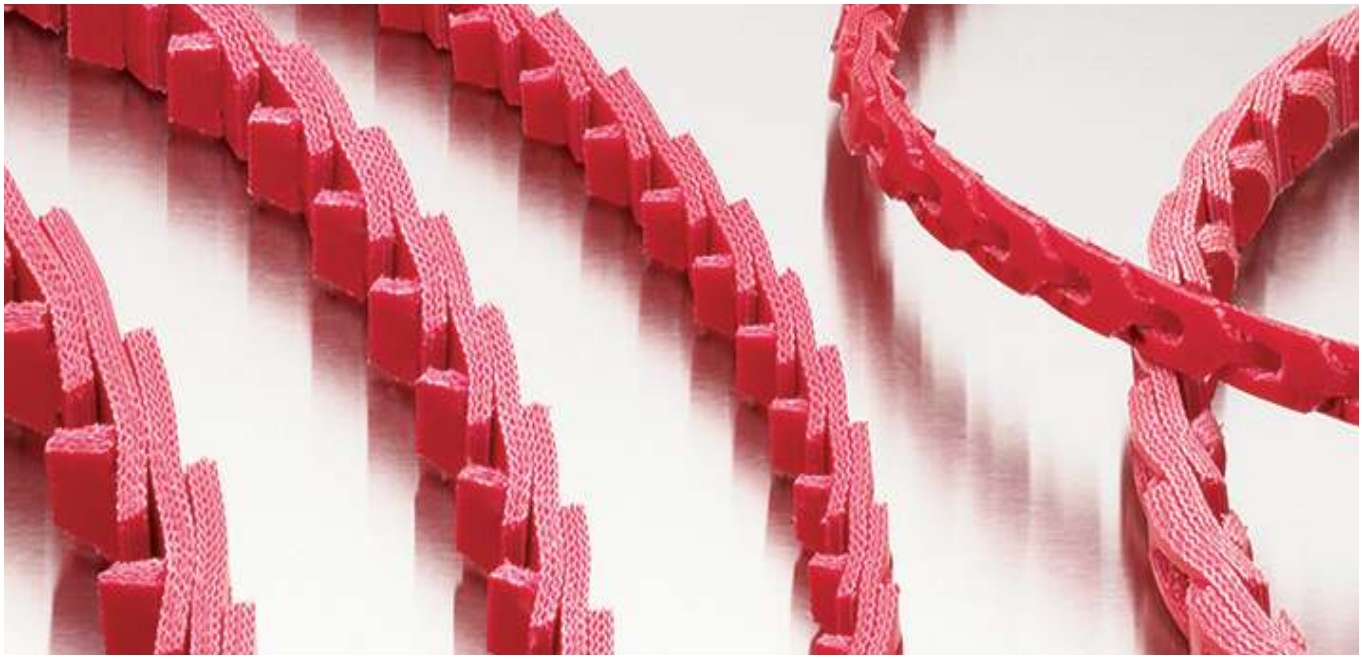

PowerTwist V Belts

Belt	Colour	Compliancy	Material	Temperature Range		Roll Length (m)	Weight
				°F	°C		kg/m
PowerTwist-A	Red	ROHS 2002/95/EC	Composite Polyester/Polyurethane	-22 to +150	-30 to +66	30	0.07
PowerTwist-B	Red	ROHS 2002/95/EC	Composite Polyester/Polyurethane	-22 to +150	-30 to +66	30	0.14
PowerTwist-C	Red	ROHS 2002/95/EC	Composite Polyester/Polyurethane	-22 to +150	-30 to +66	30	0.18
PowerTwist-Z	Red	RoHS	Composite Polyester/Polyurethane	-40 to +240	-40 to +116	-	-
PowerTwist-SPA	Blue	REACH, RoHS	Composite Polyester/Polyurethane	-40 to +240	-40 to +116	-	-

All sizes are available for purchase / mtr

Every effort has been taken to ensure that the data listed in this catalogue is correct.
Finer Power Transmissions P/L will not accept liability for any damage or loss caused as a result of the data in this catalogue.

NutLink V Belts

Belt	Colour	Compliancy	Material	Temperature Range		Roll Length (m)	Weight
				°F	°C		kg/m
NuTlink-Z	Orange	RoHS	Composite Polyester/Polyurethane Steel Rivets	-40 to +240	-40 to +116	20	0.10
NuTlink-A	Orange	RoHS	Composite Polyester/Polyurethane Steel Rivets	-40 to +240	-40 to +116	20	0.15
NuTlink-B	Orange	RoHS	Composite Polyester/Polyurethane Steel Rivets	-40 to +240	-40 to +116	20	0.20
NuTlink-C	Orange	RoHS	Composite Polyester/Polyurethane	-40 to +240	-40 to +116	-	-

All sizes are available for purchase / mtr

Every effort has been taken to ensure that the data listed in this catalogue is correct.
Finer Power Transmissions P/L will not accept liability for any damage or loss caused as a result of the data in this catalogue.

Eagle Green 89 Textured

Size	Dimensions (mm)	Minimum Pulley Ø (mm)	Working Load @ percent Tension								Weight
			4%		6%		8%		10%		
			lbs	N	lbs	N	lbs	N	lbs	N	kg/m
PC-3R	3	27	0.6	2.7	0.9	4	1.2	5.3	1.5	6.7	0.009
PC-4R	4	36	0.9	4.1	1.5	6.8	2.1	9.3	2.6	11.6	0.015
PC-5R	5	45	1.5	6.5	2.4	10.6	3.3	14.6	4.1	18.2	0.023
PC-6R	6	54	2.1	9.3	3.4	15.3	4.7	21	5.9	26.2	0.034
PC-8R	8	72	3.7	16.6	6.1	27.2	8.4	37.3	10.5	46.7	0.06
PC-10R	10	90	5.8	25.8	9.5	42.3	13.1	58.1	16.3	72.5	0.093
PC-12R	12	108	8.4	37.3	13.8	61.2	18.9	84.1	23.6	105.1	0.135

All sizes are available for purchase / mtr

Eagle Red 85 Quick Connect

Size	Dimensions (mm)		Minimum Pulley Ø (mm)	Working Load @ percent Tension								Weight
				4%		6%		8%		10%		
	OD	ID		lbs	N	lbs	N	lbs	N	lbs	N	kg/m
PC-6QC	6	2.5	48	0.7	3.2	1.1	5	1.5	6.7	1.9	8.3	0.028
PC-8QC	8	3.2	64	1.3	5.8	2	9	2.7	12.1	3.4	14.9	0.051
PC-10QC	10	3.8	80	2.1	9.3	3.2	14.4	4.3	19.3	5.3	23.8	0.081
PC-12QC	12	5.2	96	2.8	12.6	4.4	19.7	5.9	26.3	7.3	32.5	0.11

All sizes are available for purchase / mtr
Quick Connect Joiners sold seperately

Every effort has been taken to ensure that the data listed in this catalogue is correct.
Finer Power Transmissions P/L will not accept liability for any damage or loss caused as a result of the data in this catalogue.

FINERPOWER TRANSMISSIONS

Pulleys

PULLEYS

Classical Timing Pulleys **2.4.5**
XL037 series Classical Timing Pulleys (Pilot Bore) 2.4.5
L050 series Classical Timing Pulleys (Taper Lock) 2.4.6
L100 series Classical Timing Pulleys (Taper Lock) 2.4.7
H100 series Classical Timing Pulleys (Taper Lock) 2.4.8
H150 series Classical Timing Pulleys (Taper Lock) 2.4.9
H200 series Classical Timing Pulleys (Taper Lock) 2.4.10
HTD Timing Pulleys **2.4.11**
3M HTD Timing Pulleys (Pilot Bore) 2.4.11
5M HTD Timing Pulleys (Pilot Bore) 2.4.12
HTD Timing Pulley - Types 2.4.14
8M HTD Timing Pulleys (Taper Lock) 2.4.15
14M HTD Timing Pulleys (Taper Lock) 2.4.17
T5 & T10 Timing Pulleys **2.4.19**
Mi-Lock Pulleys **2.4.22**
V-Pulley Selection **2.4.23**
V-Pulley Types **2.4.24**
SPA V-Pulleys (Taper Lock) **2.4.25**
SPB V-Pulleys (Taper Lock) **2.4.29**
SPC V-Pulleys (Taper Lock) **2.4.33**
SPZ Pulleys (Taper Lock) **2.4.37**
Pilot Bore Pulleys **2.4.40**
SPA Pilot Bore Pulleys 2.4.40
SPB Pilot Bore Pulleys 2.4.40
Aluminium V-Pulleys **2.4.41**
A Section Aluminium Pulleys 2.4.41
B Section Aluminium Pulleys 2.4.42
M Section Aluminium Pulleys 2.4.44

Every effort has been taken to ensure that the data listed in this catalogue is correct.
Finer Power Transmissions P/L will not accept liability for any damage or loss caused as a result of the data in this catalogue.

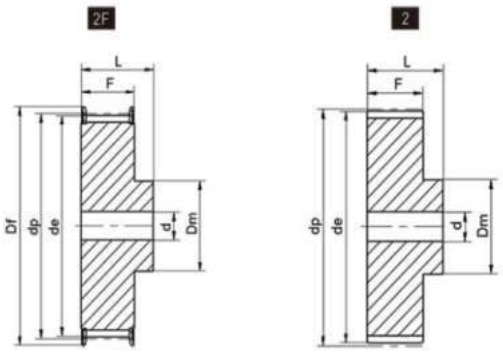

XL037 series Classical Timing Pulleys (Pilot Bore)

Part No.	Type	Metal	Z	dp	de	Df	Dm	F	L	d	Flang	Weight (kg)
10-XL-037PB	2F	Al	10	16.17	15.66	23	10	14.3	20	-	201	0.01
11-XL-037PB	2F	Al	11	17.79	17.28	23	10	14.3	20	-	201	0.01
12-XL-037PB	2F	Al	12	19.40	18.90	25	10	14.3	20	-	203	0.01
13-XL-037PB	2F	Al	13	21.02	20.51	25	10	14.3	20	-	203	0.01
14-XL-037PB	2F	Al	14	22.64	22.13	28	16	14.3	20	-	204	0.02
15-XL-037PB	2F	Al	15	24.25	23.75	28	16	14.3	20	-	204	0.02
16-XL-037PB	2F	Al	16	25.87	25.36	32	16	14.3	20	-	205	0.03
17-XL-037PB	2F	Al	17	27.49	26.98	32	20	14.3	20	-	205	0.03
18-XL-037PB	2F	Al	18	29.11	28.50	36	20	14.3	20	-	206	0.04
19-XL-037PB	2F	Al	19	30.72	30.21	36	20	14.3	22	-	206	0.04
20-XL-037PB	2F	Al	20	32.34	31.83	38	25	14.3	22	-	207	0.05
21-XL-037PB	2F	Al	21	33.96	33.45	38	25	14.3	22	-	207	0.05
22-XL-037PB	2F	Al	22	35.57	35.07	42	25	14.3	22	-	208	0.06
24-XL-037PB	2F	Al	24	38.81	38.30	44	30	14.3	22	-	209	0.06
25-XL-037PB	2F	Al	25	40.42	39.92	44	30	14.3	22	8	209	0.06
26-XL-037PB	2F	Al	26	42.04	41.53	48	30	14.3	22	8	210	0.09
27-XL-037PB	2F	Al	27	43.66	43.15	48	34	14.3	22	8	210	0.09
28-XL-037PB	2F	Al	28	45.28	44.77	51	34	14.3	22	8	211	0.10
30-XL-037PB	2F	Al	30	48.51	48.00	54	38	14.3	22	8	212	0.12
32-XL-037PB	2F	Al	32	51.74	51.24	57	38	14.3	25	8	212	0.12
34-XL-037PB	2F	Al	34	54.98	54.47	60	38	14.3	25	8	214	0.13
36-XL-037PB	2	Al	36	58.21	57.70	-	45	14.3	25	8	-	0.14
40-XL-037PB	2	Al	40	64.68	64.17	-	45	14.3	25	8	-	0.16
42-XL-037PB	2	Al	42	67.91	67.41	-	45	14.3	25	8	-	0.18
44-XL-037PB	2	Al	44	71.15	70.64	-	45	14.3	25	8	-	0.19
48-XL-037PB	2	Al	48	77.62	77.11	-	45	14.3	25	10	-	0.22
52-XL-037PB	2	Al	52	84.08	83.57	-	45	14.3	25	10	-	0.25
60-XL-037PB	2	Al	60	97.02	96.51	-	45	14.3	25	10	-	0.32
72-XL-037PB	2	Al	72	116.42	115.92	-	45	14.3	25	10	-	0.45

Every effort has been taken to ensure that the data listed in this catalogue is correct.
Finer Power Transmissions P/L will not accept liability for any damage or loss caused as a result of the data in this catalogue.

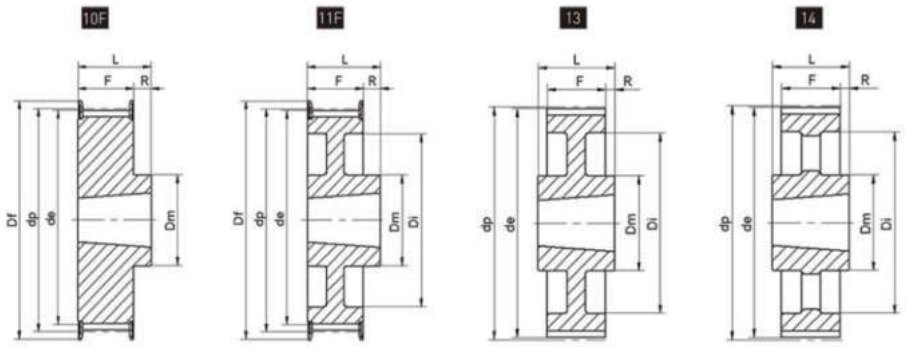

L050 series Classical Timing Pulleys (Taper Lock)

Part No.	Type	Metal	Z	Bush	Max Bore	dp	de	Df	Dm	Di	F	L	R	Flang	Weight (kg)
18-L-050TL	10F	St	18	1108	28	54.57	53.81	60	44		19	22	3	308	0.16
19-L-050TL	10F	St	19	1108	28	57.61	56.84	63	44		19	22	3	309	0.21
20-L-050TL	10F	St	20	1108	28	60.44	59.88	66	48		19	22	3	310	0.25
21-L-050TL	10F	St	21	1108	28	63.67	62.91	71	48		19	22	3	311	0.30
22-L-050TL	10F	St	22	1108	28	66.70	65.94	75	51		19	22	3	312	0.35
23-L-050TL	10F	St	23	1108	28	69.73	68.97	79	54		19	22	3	313	0.42
24-L-050TL	10F	St	24	1108	28	72.77	72.00	79	54		19	22	3	313	0.45
25-L-050TL	10F	St	25	1108	28	75.80	75.04	83	56		19	22	3	314	0.50
26-L-050TL	10F	St	26	1108	28	78.83	78.07	87	60		19	22	3	315	0.57
27-L-050TL	10F	St	27	1108	28	81.86	81.10	87	62		19	22	3	316	0.61
28-L-050TL	10F	St	28	1108	28	84.89	84.13	91	65		19	22	3	318	0.69
30-L-050TL	10F	St	30	1108	28	90.96	90.20	97	70		19	22	3	320	0.91
32-L-050TL	10F	St	32	1108	28	97.02	96.26	103	74		19	22	3	323	0.97
36-L-050TL	10F	St	36	1108	28	109.15	108.39	115	85		19	22	3	327	1.20
40-L-050TL	10F	St	40	1610	42	121.28	120.51	127	97		19	25	6	330	1.40
44-L-050TL	11F	St	44	1610	42	133.40	132.64	140	88	110	19	25	6	334	1.57
48-L-050TL	11F	St	48	1610	42	145.53	144.77	152	88	120	19	25	6	-	2.30
60-L-050TL	13	St	60	1610	42	181.91	181.15	-	92	166	19	25	3	-	2.60
72-L-050TL	14	GG	72	1610	42	218.30	217.53	-	92	202	19	25	3	-	2.29
84-L-050TL	14	GG	84	1610	42	254.68	253.90	-	92	236	19	25	3	-	2.78
96-L-050TL	14	GG	96	2012	50	291.06	290.30	-	106	270	19	32	6.5	-	3.50
120-L-050TL	14	GG	120	2012	50	363.83	363.07	-	106	343	19	32	6.5	-	5.11

Every effort has been taken to ensure that the data listed in this catalogue is correct.
Finer Power Transmissions P/L will not accept liability for any damage or loss caused as a result of the data in this catalogue.

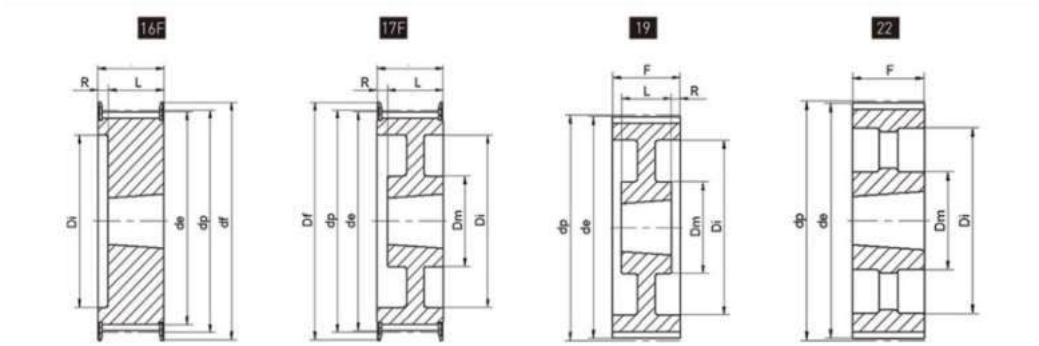

L100 series Classical Timing Pulleys (Taper Lock)

Part No.	Type	Metal	Z	Bush	Max Bore	dp	de	Df	Dm	Di	F	L	R	Flang	Weight (kg)
18-L-100TL	16F	St	18	1108	28	54.57	53.81	60	-	38	31	22	9	308	0.20
19-L-100TL	16F	St	19	1108	28	57.61	56.84	63	-	38	31	22	9	309	0.23
20-L-100TL	16F	St	20	1108	28	60.44	59.88	66	-	45	31	22	9	310	0.35
21-L-100TL	16F	St	21	1108	28	63.67	62.91	71	-	45	31	22	9	311	0.45
22-L-100TL	16F	St	22	1108	28	66.70	65.94	75	-	48	31	22	9	312	0.48
23-L-100TL	16F	St	23	1108	28	69.73	68.97	79	-	52	32	22	10	313	0.54
24-L-100TL	16F	St	24	1108	28	72.77	72.00	79	-	52	32	22	10	313	0.62
25-L-100TL	16F	St	25	1108	28	75.80	75.04	83	-	54	32	22	10	314	0.71
26-L-100TL	16F	St	26	1108	28	78.83	78.07	87	-	60	32	22	10	315	0.75
27-L-100TL	16F	St	27	1108	28	81.86	81.10	87	-	60	32	22	10	315	0.83
28-L-100TL	16F	St	28	1108	28	84.89	84.13	91	-	65	32	22	10	316	0.91
30-L-100TL	16F	St	30	1210	32	90.96	90.20	97	-	71	32	25	7	318	1.00
32-L-100TL	16F	St	32	1210	32	97.02	96.26	103	-	75	32	25	7	320	1.16
36-L-100TL	16F	St	36	1610	42	109.15	108.39	115	-	86	32	25	7	323	1.79
40-L-100TL	16F	St	40	1610	42	121.28	117.48	123	-	96	32	25	7	327	1.89
44-L-100TL	17F	St	44	1610	42	133.40	132.64	140	90	110	32	25	7	330	2.04
48-L-100TL	17F	St	48	1610	42	145.53	144.77	152	92	120	32	25	7	334	2.45
60-L-100TL	19	St	60	1610	42	181.91	181.15	-	92	166	32	25	3.5	-	3.12
72-L-100TL	22	GG	72	2012	50	218.30	217.53	-	106	202	32	32	-	-	3.42
84-L-100TL	22	GG	84	2012	50	254.68	253.90	-	106	236	32	32	-	-	4.08
96-L-100TL	22	GG	96	2012	50	291.60	290.30	-	106	270	32	32	-	-	5.10
120-L-100TL	22	GG	120	2012	50	363.83	363.07	-	106	343	32	32	-	-	6.78

Every effort has been taken to ensure that the data listed in this catalogue is correct.
Finer Power Transmissions P/L will not accept liability for any damage or loss caused as a result of the data in this catalogue.

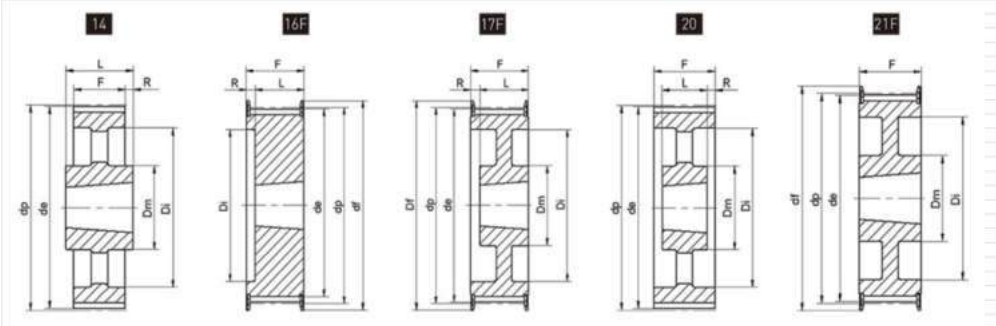

H100 series Classical Timing Pulleys (Taper Lock)

Part No.	Type	Metal	Z	Bush	Max Bore	dp	de	Df	Dm	Di	F	L	R	Flang	Weight (kg)
14-H-100TL	16F	St	14	1108	28	56.60	55.22	63	-	40	31	22	9	309	0.25
15-H-100TL	16F	St	15	1108	28	60.64	59.27	66	-	44	31	22	9	310	0.33
16-H-100TL	16F	St	16	1108	28	64.68	63.31	71	-	45	31	22	9	311	0.42
17-H-100TL	16F	St	17	1108	28	68.72	67.35	75	-	49	31	22	9	312	0.45
18-H-100TL	16F	St	18	1210	32	72.77	71.39	79	-	52	31	25	6	313	0.49
19-H-100TL	16F	St	19	1210	32	76.81	75.66	83	-	56	31	25	6	314	0.58
20-H-100TL	16F	St	20	1210	32	80.85	79.48	87	-	60	31	25	6	315	0.69
21-H-100TL	16F	St	21	1210	32	84.89	83.52	91	-	64	32	25	7	316	0.80
22-H-100TL	16F	St	22	1210	32	88.94	87.56	93	-	67	32	25	7	317	0.94
23-H-100TL	16F	St	23	1610	42	92.98	91.61	97	-	70	32	25	7	318	0.97
24-H-100TL	16F	St	24	1610	42	97.02	95.65	103	-	73.5	32	25	7	320	1.05
25-H-100TL	16F	St	25	1610	42	101.06	9969	106	-	77	32	25	7	321	1.13
26-H-100TL	16F	St	26	1610	42	105.11	103.73	111	-	82	32	25	7	322	1.27
27-H-100TL	16F	St	27	1610	42	109.15	107.78	115	-	85	32	25	7	323	1.35
28-H-100TL	16F	St	28	1610	42	113.19	111.82	119	-	90.5	32	25	7	325	1.54
30-H-100TL	16F	St	30	1610	42	121.28	119.90	127	-	98	32	25	7	327	1.85
32-H-100TL	17F	St	32	1610	42	129.36	127.99	135	90	106	32	25	7	328	2.05
36-H-100TL	17F	St	36	1610	42	145.53	144.16	152	92	121	32	25	7	334	2.39
40-H-100TL	17F	St	40	1610	42	161.70	160.33	168	92	138	32	25	7	338	2.78
44-H-100TL	21F	St	44	2012	50	177.87	176.50	184	106	152	32	32	-	339	3.68
48-H-100TL	21F	St	48	2012	50	194.04	192.67	200	200	169	32	32	-	340	4.00
60-H-100TL	20	GG	60	2012	50	242.55	241.18	-		223	34	32	1	342	4.32
72-H-100TL	20	GG	72	2012	50	291.06	289.69	-		270	34	32	1	-	5.47
84-H-100TL	20	GG	84	2012	50	339.57	338.20	-		318	34	32	1	-	6.45
96-H-100TL	14	GG	96	2517	60	388.08	386.71	-		366	34	45	5.5	-	8.30
120-H-100TL	14	GG	120	2517	60	485.10	483.73	-		462	34	45	5.5	-	10.99

Every effort has been taken to ensure that the data listed in this catalogue is correct.
Finer Power Transmissions P/L will not accept liability for any damage or loss caused as a result of the data in this catalogue.

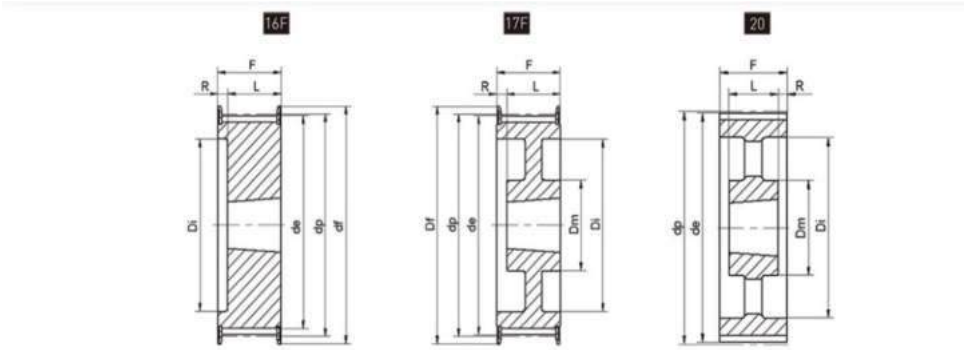

H150 series Classical Timing Pulleys (Taper Lock)

Part No.	Type	Metal	Z	Bush	Max Bore	dp	de	Df	Dm	Di	F	L	R	Flang	Weight (kg)
15-H-150TL	16F	St	15	1108	28	60.64	59.27	66	-	44	45	22	23	310	0.51
16-H-150TL	16F	St	16	1108	28	66.68	63.31	71	-	46	45	22	23	311	0.59
18-H-150TL	16F	St	18	1210	32	72.88	71.39	79	-	52	45	25	20	313	0.65
19-H-150TL	16F	St	19	1210	32	76.81	75.44	83	-	56	45	25	20	314	0.72
20-H-150TL	16F	St	20	1210	32	80.85	79.48	87	-	60	45	25	20	315	0.88
21-H-150TL	16F	St	21	1210	32	84.89	83.52	91	-	64	45	25	20	316	1.11
22-H-150TL	16F	St	22	1210	32	88.94	87.56	93	-	67	45	25	20	317	1.13
23-H-150TL	16F	St	23	1610	42	92.98	91.61	97	-	70	45	25	20	318	1.27
24-H-150TL	16F	St	24	1610	42	97.02	95.65	103	-	73.5	45	25	20	320	1.32
25-H-150TL	16F	St	25	1610	42	101.06	99.69	106	-	77	45	25	20	321	1.41
26-H-150TL	16F	St	26	1610	42	105.11	103.73	111	-	82	45	25	20	322	1.55
27-H-150TL	16F	St	27	1610	42	109.15	107.78	115	-	85	45	25	20	323	1.65
28-H-150TL	16F	St	28	1610	42	113.19	111.82	119	-	90.5	45	25	20	325	1.88
30-H-150TL	16F	St	30	1610	42	121.28	119.90	127	-	98	45	25	20	327	2.18
32-H-150TL	17F	St	32	1610	42	129.36	127.99	135	90	106	45	25	20	328	2.30
36-H-150TL	17F	St	36	1610	42	145.33	144.16	152	92	121	45	25	20	334	2.77
40-H-150TL	17F	St	40	1610	42	161.70	160.33	168	92	138	45	25	20	338	3.27
44-H-150TL	17F	St	44	2012	50	177.87	176.50	184	106	152	45	32	13	339	4.17
48-H-150TL	17F	St	48	2012	50	194.04	192.67	200	106	169	45	32	13	342	7.45
60-H-150TL	20	GG	60	2012	50	242.55	241.18	-	106	223	46	32	7	-	5.33
72-H-150TL	20	GG	72	2012	50	291.06	289.69	-	106	270	46	32	7	-	6.30
84-H-150TL	20	GG	84	2012	50	339.57	338.20	-	106	320	46	32	7	-	7.48
96-H-150TL	20	GG	96	2517	60	388.08	386.71	-	119	366	46	45	0.5	-	9.60
120-H-150TL	20	GG	120	2517	60	485.10	483.73	-	119	462	46	45	0.5	-	12.85

Every effort has been taken to ensure that the data listed in this catalogue is correct.
Finer Power Transmissions P/L will not accept liability for any damage or loss caused as a result of the data in this catalogue.

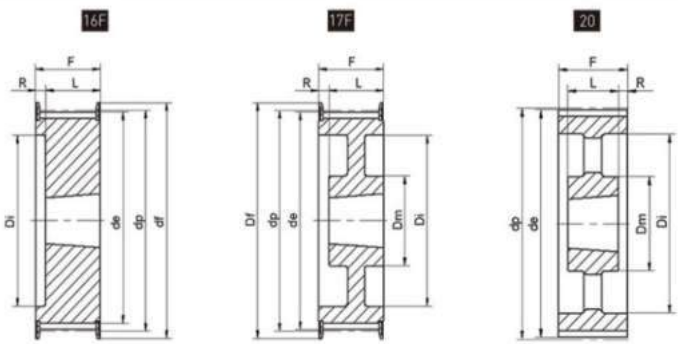

H200 series Classical Timing Pulleys (Taper Lock)

Part No.	Type	Metal	Z	Bush	Max Bore	dp	de	Df	Dm	Di	F	L	R	Flang	Weight (kg)
16-H-200TL	16F	St	16	1108	28	64.68	63.31	71	-	45	58	22	36	311	0.70
18-H-200TL	16F	St	18	1210	32	72.77	71.39	79	-	52	58	25	33	313	0.81
20-H-200TL	16F	St	20	1610	42	80.85	79.48	87	-	60	58	25	33	315	0.91
22-H-200TL	16F	St	22	1610	42	88.94	87.56	93	-	67	58	25	33	317	1.20
24-H-200TL	16F	St	24	1610	42	97.02	95.45	103	-	73.5	58	25	33	320	1.50
26-H-200TL	16F	St	26	1610	42	105.11	103.73	111	-	82	58	25	33	322	1.84
28-H-200TL	16F	St	28	1610	42	113.19	111.82	119	-	90.5	58	25	33	325	2.71
30-H-200TL	16F	St	30	1610	42	121.28	119.9	127	-	98	58	25	33	327	2.50
32-H-200TL	16F	St	32	2012	50	129.36	127.99	135	-	106	58	32	26	328	2.92
36-H-200TL	17F	St	36	2012	50	145.53	144.16	152	102	121	58	32	26	334	3.62
40-H-200TL	17F	St	40	2012	50	161.7	160.33	168	106	138	58	32	26	338	4.12
44-H-200TL	17F	St	44	2012	50	177.87	176.5	184	106	152	58	32	26	339	4.81
48-H-200TL	17F	St	48	2517	60	194.04	192.67	200	119	169	58	45	13	342	6.5
60-H-200TL	20	GG	60	2517	60	242.55	241.18	-	119	223	60	45	7.5	-	6.3
72-H-200TL	20	GG	72	2517	60	291.06	289.69	-	119	270	60	45	7.5	-	7.64
84-H-200TL	20	GG	84	2517	60	339.57	338.2	-	119	320	60	45	7.5	-	9.10
96-H-200TL	20	GG	96	2517	60	388.08	386.71	-	119	366	60	45	7.5	-	11.50
120-H-200TL	20	GG	120	2517	60	485.1	483.73	-	119	462	60	45	7.5	-	14.70

Every effort has been taken to ensure that the data listed in this catalogue is correct.
Finer Power Transmissions P/L will not accept liability for any damage or loss caused as a result of the data in this catalogue.

Finer Power Transmissions keep a range of 3M and 5M HTD timing pulleys in Pilot Bore.

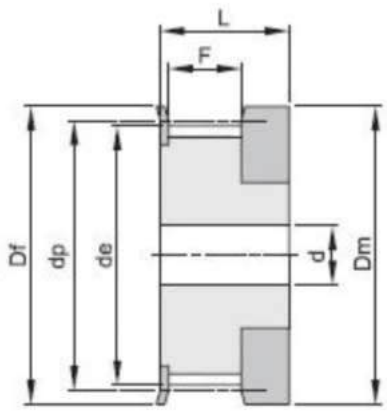

1F

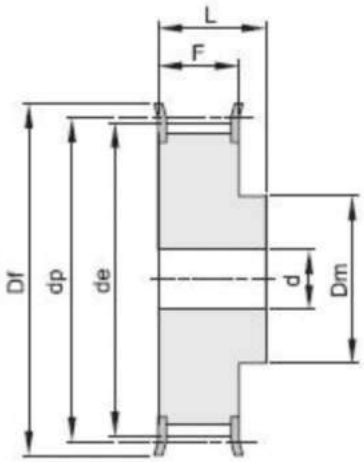

2F

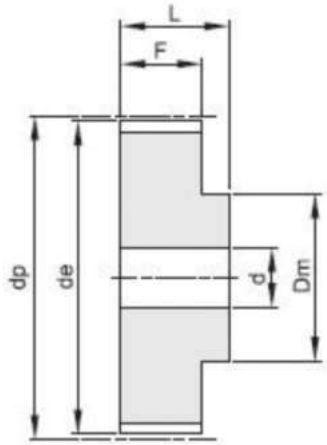

2

3M HTD Timing Pulleys (Pilot Bore)

Part No.	Type	Material	Z	dp	de	Df	Dm	F	L	d	Flange	Approx KG
10-3M-9	1F	Al	10	9.55	8.79	13	12	10.2	17.5	-	100	0.01
10-3M-15	1F	Al	10	9.55	8.79	13	12	17	26	-	100	0.01
12-3M-9	1F	Al	12	11.46	10.7	15	15	10.2	17.5	-	101	0.01
12-3M-15	1F	Al	12	11.46	10.7	15	15	17	26	-	101	0.01
14-3M-9	1F	Al	14	13.37	12.61	16	16	10.2	17.5	-	102	0.01
14-3M-15	1F	Al	14	13.37	12.61	16	16	17	26	-	102	0.01
15-3M-9	1F	Al	15	14.32	13.56	18	17.5	10.2	17.5	-	104	0.01
15-3M-15	1F	Al	15	14.32	13.56	18	17.5	17	26	-	104	0.01
16-3M-9	2F	Al	16	15.28	14.52	18	10	12.8	20.6	4	104	0.01
16-3M-15	2F	Al	16	15.28	14.52	18	10	19.5	26	4	104	0.01
18-3M-9	2F	Al	18	17.19	16.43	19.5	11	12.8	20.6	6	105	0.01
18-3M-15	2F	Al	18	17.19	16.43	19.5	11	19.5	26	6	105	0.01
20-3M-9	2F	Al	20	19.1	18.34	23	13	12.8	20.6	6	107	0.01
20-3M-15	2F	Al	20	19.1	18.34	23	13	19.5	26	6	107	0.01
21-3M-9	2F	Al	21	20.05	19.29	25	14	12.8	20.6	6	108	0.01
21-3M-15	2F	Al	21	20.05	19.29	25	14	19.5	26	6	108	0.02
22-3M-9	2F	Al	22	21.01	20.25	25	14	12.8	20.6	6	108	0.01
22-3M-15	2F	Al	22	21.01	20.25	25	14	19.5	26	6	108	0.02
26-3M-9	2F	Al	26	24.83	24.07	32	16	12.8	20.6	6	109	0.02
26-3M-15	2F	Al	26	24.83	24.07	32	16	19.5	26	6	109	0.03
32-3M-9	2F	St	32	30.56	29.8	36	22	12.8	20.6	6	111	0.03
32-3M-15	2F	St	32	30.56	29.8	36	22	19.5	26	6	111	0.03

Table continue next page.

Every effort has been taken to ensure that the data listed in this catalogue is correct.
Finer Power Transmissions P/L will not accept liability for any damage or loss caused as a result of the data in this catalogue.

3M HTD Timing Pulleys (Pilot Bore)

Part No.	Type	Material	Z	dp	de	Df	Dm	F	L	d	Flange	Approx KG
36-3M-9	2F	St	36	34.38	33.62	38	26	13.4	22.2	6	112	0.05
36-3M-15	2F	St	36	34.38	33.62	38	26	19.5	30	6	112	0.06
40-3M-9	2F	St	40	38.2	37.44	42	28	13.4	22.2	6	113	0.06
40-3M-15	2F	St	40	38.2	37.44	42	28	20	30	6	113	0.08
44-3M-9	2F	St	44	42.02	41.26	48	33	13.4	22.2	6	114	0.07
44-3M-15	2F	St	44	42.02	41.26	48	33	20	30	6	114	0.1
48-3M-9	2	St	48	45.84	45.08	-	33	13.4	22.2	8	-	0.11
48-3M-15	2	St	48	45.84	45.08	-	33	20	30	8	-	0.1
60-3M-9	2	St	60	57.3	56.54	-	33	13.4	22.2	8	-	0.11
60-3M-15	2	St	60	57.3	56.54	-	33	20	30	8	-	0.15
72-3M-9	2	St	72	68.76	68.76	-	33	13.4	22.2	8	-	0.15
72-3M-15	2	St	72	68.76	68.76	-	33	20	30	8	-	0.21

5M HTD Timing Pulleys (Pilot Bore)

Part No.	Type	Material	Z	dp	de	Df	Dm	F	L	d	Flange	Approx KG
12-5M-9PB	2F	St	12	19.1	17.96	23	12.5	14.5	20	-	202	0.03
12-5M-15PB	2F	St	12	19.1	17.96	23	12.5	20.5	26	-	202	0.03
12-5M-25PB	2F	St	12	19.1	17.96	23	12.5	30.5	36	6	202	0.05
14-5M-9PB	2F	St	14	22.28	21.14	25	13.5	14.5	20	6	203	0.04
14-5M-15PB	2F	St	14	22.28	21.14	25	13.5	20.5	26	6	203	0.04
14-5M-25PB	2F	St	14	22.28	21.14	25	13.5	30.5	36	6	203	0.08
15-5M-9PB	2F	St	15	23.87	22.73	28	16	14.5	20	6	204	0.05
15-5M-15PB	2F	St	15	23.87	22.73	28	16	20.5	26	6	204	0.05
15-5M-25PB	2F	St	15	23.87	22.73	28	16	30.5	36	6	204	0.09
16-5M-9PB	2F	St	16	25.46	24.32	28	16.5	14.5	20	6	204	0.06
16-5M-15PB	2F	St	16	25.46	24.32	28	16.5	20.5	26	6	204	0.06
16-5M-25PB	2F	St	16	25.46	24.32	28	16.5	30.5	36	6	204	0.11
18-5M-9PB	2F	St	18	28.65	27.51	32	20	14.5	20	6	205	0.07
18-5M-15PB	2F	St	18	28.65	27.51	32	20	20.5	26	6	205	0.09
18-5M-25PB	2F	St	18	28.65	27.51	32	20	30.5	36	6	205	0.13
20-5M-9PB	2F	St	20	31.83	30.69	36	23	14.5	22.5	6	206	0.1
20-5M-15PB	2F	St	20	31.83	30.69	36	23	20.5	26	6	206	0.12
20-5M-25PB	2F	St	20	31.83	30.69	36	23	30.5	38	6	206	0.17
21-5M-9PB	2F	St	21	33.42	32.28	38	24	14.5	22.5	6	207	0.12
21-5M-15PB	2F	St	21	33.42	32.28	38	24	20.5	26	6	207	0.14
21-5M-25PB	2F	St	21	33.42	32.28	38	24	30.5	38	6	207	0.2
22-5M-9PB	2F	St	22	35.01	33.87	38	25.5	14.5	22.5	6	207	0.13
22-5M-15PB	2F	St	22	35.01	33.87	38	25.5	20.5	26	6	207	0.15
22-5M-25PB	2F	St	22	35.01	33.87	38	25.5	30.5	38	6	207	0.22
24-5M-9PB	2F	St	24	38.2	37.06	42	27	14.5	22.5	6	208	0.15
24-5M-15PB	2F	St	24	38.2	37.06	42	27	20.5	26	6	208	0.19
24-5M-25PB	2F	St	24	38.2	37.06	42	27	30.5	38	6	208	0.26
26-5M-9PB	2F	St	26	41.38	40.24	44	30	14.5	22.5	6	209	0.18
26-5M-15PB	2F	St	26	41.38	40.24	44	30	20.5	28	6	209	0.23
26-5M-25PB	2F	St	26	41.38	40.24	44	30	30.5	38	6	209	0.32
28-5M-9PB	2F	St	28	44.56	43.42	48	30.5	14.5	22.5	6	210	0.21
28-5M-15PB	2F	St	28	44.56	43.42	48	30.5	20.5	28	6	210	0.26
28-5M-25PB	2F	St	28	44.56	43.42	48	30.5	30.5	38	6	210	0.37
30-5M-9PB	2F	St	30	47.75	46.6	51	35	14.5	22.5	6	211	0.25
30-5M-15PB	2F	St	30	47.75	46.6	51	35	20.5	28	6	211	0.32
30-5M-25PB	2F	St	30	47.75	46.6	51	35	30.5	38	6	211	0.44

Table continue next page.

Every effort has been taken to ensure that the data listed in this catalogue is correct.
Finer Power Transmissions P/L will not accept liability for any damage or loss caused as a result of the data in this catalogue.

5M HTD Timing Pulleys (Pilot Bore)

Part No.	Type	Material	Z	dp	de	Df	Dm	F	L	d	Flange	Approx KG
32-5M-9PB	2F	St	32	50.93	49.79	54	38	14.5	22.5	8	212	0.28
32-5M-15PB	2F	St	32	50.93	49.79	54	38	20.5	28	8	212	0.35
32-5M-25PB	2F	St	32	50.93	49.79	54	38	30.5	38	8	212	0.48
36-5M-9PB	2F	St	36	57.3	56.16	60	38	14.5	22.5	8	214	0.33
36-5M-15PB	2F	St	36	57.3	56.16	60	38	20.5	28	8	214	0.43
36-5M-25PB	2F	St	36	57.3	56.16	60	38	30.5	38	8	214	0.59
40-5M-9PB	2F	St	40	63.66	62.52	71	38	14.5	22.5	8	217	0.42
40-5M-15PB	2F	St	40	63.66	62.52	71	38	20.5	28	8	217	0.52
40-5M-25PB	2F	St	40	63.66	62.52	71	38	30.5	38	8	217	0.75
44-5M-9PB	-	Al	44	70.03	68.89	-	38	14.5	25.5	8	-	0.17
44-5M-15PB	-	Al	44	70.03	68.89	-	38	20.5	30	8	-	0.23
44-5M-25PB	-	Al	44	70.03	68.89	-	38	30.5	40	8	-	0.32
48-5M-9PB	-	Al	48	76.39	75.25	-	45	14.5	25.5	8	-	0.18
48-5M-15PB	-	Al	48	76.39	75.25	-	38	20.5	30	8	-	0.29
48-5M-25PB	-	Al	48	76.39	75.25	-	38	30.5	40	8	-	0.28
60-5M-9PB	-	Al	60	95.49	94.35	-	45	14.5	25.5	8	-	0.23
60-5M-15PB	-	Al	60	95.49	94.35	-	50	20.5	30	8	-	0.3
60-5M-25PB	-	Al	60	95.49	94.35	-	50	30.5	40	8	-	0.44
72-5M-9PB	-	Al	72	114.59	113.45	-	45	14.5	25.5	8	-	0.42
72-5M-15PB	-	Al	72	114.59	113.45	-	50	20.5	30	8	-	0.59
72-5M-25PB	-	Al	72	114.59	113.45	-	50	30.5	40	8	-	0.85

Every effort has been taken to ensure that the data listed in this catalogue is correct.
Finer Power Transmissions P/L will not accept liability for any damage or loss caused as a result of the data in this catalogue.

HTD Timing Pulley - Types

Finer Power Transmissions carries a large range of Taper Locked HTD Timing Pulleys in 8M and 14M pitch.
Timing Pulley Nomenclature

38	8M	50
Teeth	Pitch	Width

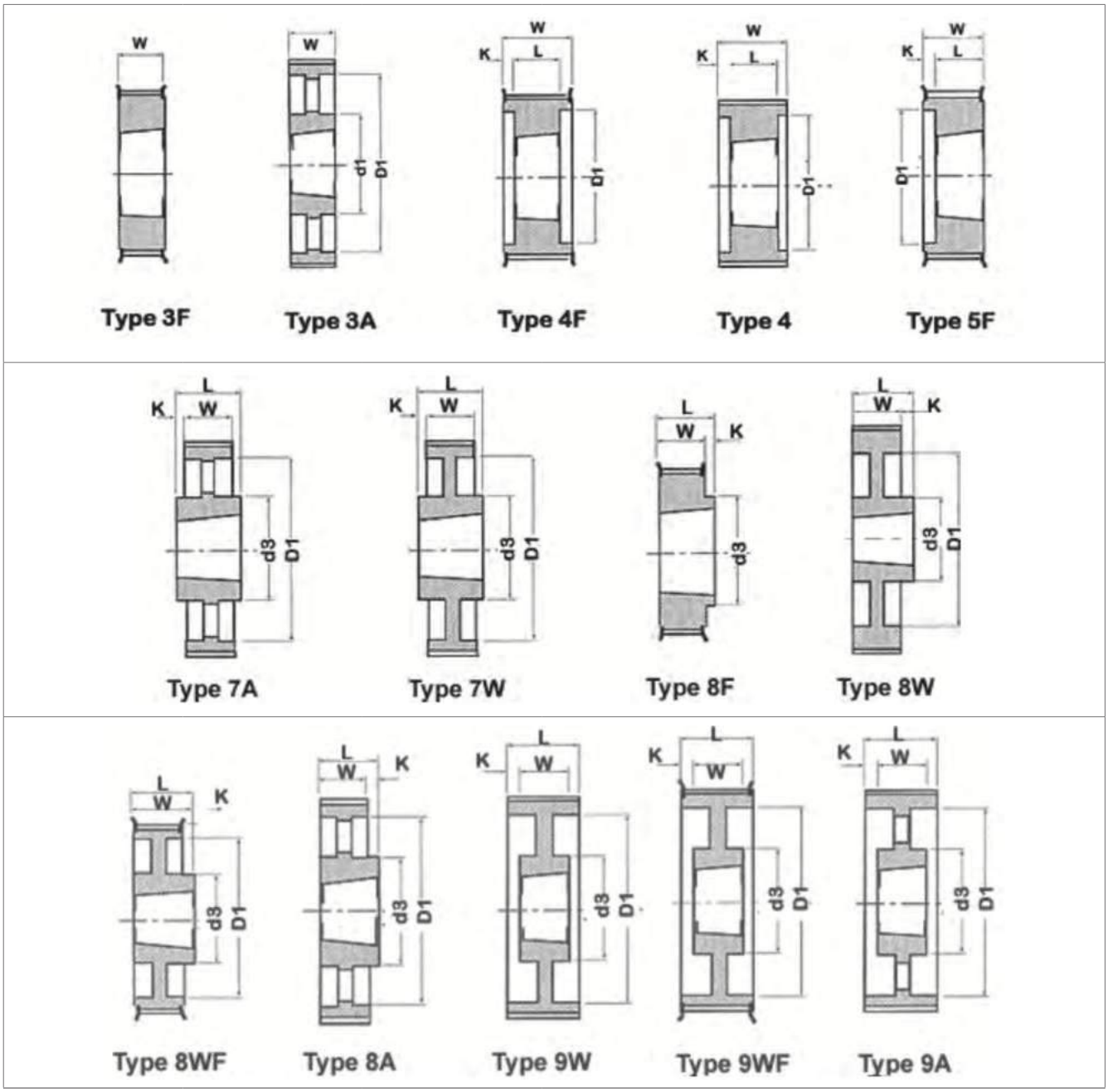

Every effort has been taken to ensure that the data listed in this catalogue is correct.
Finer Power Transmissions P/L will not accept liability for any damage or loss caused as a result of the data in this catalogue.

8M HTD Timing Pulleys (Taper Lock)

Size	Z	Mat	Bush	Outside Dia.	Hub Dia.	W	d3	Max. Bore
22-8M-20	22	GG	1008/1108	54.65	60.0	28.0	-	25
22-8M-30	22	GG	1008/1108	54.65	60.0	38.0	-	25
24-8M-20	24	GG	1108	59.75	66.0	28.0	-	28
24-8M-30	24	GG	1108	59.75	66.0	38.0	-	28
26-8M-20	26	GG	1108	64.84	71.0	28.0	-	28
26-8M-30	26	GG	1108	64.84	71.0	38.0	-	28
28-8M-20	28	GG	1108	70.08	75.0	28.0	-	28
28-8M-30	28	GG	1210	70.08	75.0	38.0	-	35
28-8M-50	28	GG	1210	70.08	75.0	60.0	-	35
30-8M-20	30	GG	1108	75.13	83.0	28.0	-	28
30-8M-30	30	GG	1615	75.13	83.0	38.0	-	42
30-8M-50	30	GG	1615	75.13	83.0	60.0	-	42
32-8M-20	32	GG	1610	80.16	87.0	28.0	-	42
32-8M-30	32	GG	1615	80.16	87.0	38.0	-	42
32-8M-50	32	GG	1615	80.16	87.0	60.0	-	42
32-8M-85	32	GG	1615	80.16	87.0	95.0	-	42
34-8M-20	34	GG	1610	85.22	91.0	28.0	-	42
34-8M-30	34	GG	1610	85.22	91.0	28.0	-	42
34-8M-50	34	GG	1615	85.22	91.0	60.0	-	42
34-8M-85	34	GG	1615	85.22	91.0	95.0	-	42
36-8M-20	36	GG	1610	90.30	98.5	28.0	-	42
36-8M-30	36	GG	1615	90.30	98.5	38.0	-	42
36-8M-50	36	GG	1615	95.39	103.0	60.0	-	42
36-8M-85	36	GG	1615	90.35	98.5	95.0	-	42
38-8M-20	38	GG	1610	95.39	103.0	28.0	-	42
38-8M-30	38	GG	1615	95.39	103.0	38.0	-	42
38-8M-50	38	GG	1615	95.39	103.0	60.0	-	42
38-8M-85	38	GG	1615	95.39	103.0	95.0	-	42
40-8M-20	40	GG	1610	100.49	106.0	28.0	-	42
40-8M-30	40	GG	1615	100.49	106.0	38.0	-	42
40-8M-50	40	GG	2012	100.49	106.0	60.0	-	50
40-8M-85	40	GG	2012	100.49	106.0	95.0	-	50
44-8M-20	44	GG	2012	110.67	119.0	28.0	-	50
44-8M-30	44	GG	2012	110.67	119.0	38.0	-	50
44-8M-50	44	GG	2012	110.67	119.0	60.0	-	50
44-8M-85	44	GG	2012	110.67	119.0	95.9	-	50
48-8M-20	48	GG	2012	120.86	127.0	28.0	96	50
48-8M-30	48	GG	2012	120.86	127.0	38.0	-	50
48-8M-50	48	GG	2012	120.86	127.0	60.0	-	50
48-8M-85	48	GG	2517	120.86	127.0	95.0	-	60
56-8M-20	56	GG	2012	141.23	148.0	28.0	110	50
56-8M-30	56	GG	2012	141.23	148.0	38.0	-	50
56-8M-50	56	GG	2517	141.23	148.0	60.0	-	60
56-8M-85	56	GG	2517	120.86	127.0	95.0	-	60
64-8M-20	64	GG	2012	161.60	168.0	28.0	110	50
64-8M-30	64	GG	2517	161.60	168.0	38.0	125	60
64-8M-50	64	GG	2517	161.60	168.0	60.0	-	60
64-8M-85	64	GG	2517	161.60	168.0	95.0	-	60
72-8M-20	72	GG	2012	181.97	192.0	28.0	110	50
72-8M-30	72	GG	2517	181.97	192.0	38.0	125	60
72-8M-50	72	GG	2517	181.97	192.0	60.0	125	60
72-8M-85	72	GG	3020	181.97	192.0	95.0	-	75

Table continue next page.

Every effort has been taken to ensure that the data listed in this catalogue is correct.
Finer Power Transmissions P/L will not accept liability for any damage or loss caused as a result of the data in this catalogue.

8M HTD Timing Pulleys (Taper Lock)

Size	Z	Mat	Bush	Outside Dia.	Hub Dia.	W	d3	Max. Bore
80-8M-20	80	GG	2012	202.35	-	28.0	110	50
80-8M-30	80	GG	2517	202.35	-	38.0	125	60
80-8M-50	80	GG	3020	202.35	-	60.0	-	75
80-8M-85	80	GG	3020	202.35	-	95.0	-	75
90-8M-20	90	GG	2012	227.81	-	28.0	110	50
90-8M-30	90	GG	2517	227.81	-	38.0	125	60
90-8M-50	90	GG	3020	227.81	-	60.0	170	75
90-8M-85	90	GG	3020	227.81	-	95.0	170	75
112-8M-30	112	GG	2517	283.83	-	38.0	125	60
112-8M-50	112	GG	3020	283.83	-	60.0	170	75
112-8M-85	112	GG	3020	283.83	-	95.0	170	75
144-8M-30	144	GG	2517	365.32	-	38.0	125	60
144-8M-50	144	GG	3020	365.32	-	60.0	170	75
144-8M-85	144	GG	3525	365.32	-	95.0	190	90
168-8M-50	168	GG	3020	426.44	-	60.0	190	90
168-8M-85	168	GG	3525	426.44	-	95.0	190	90
192-8M-50	192	GG	3525	487.55	-	60.0	190	90
192-8M-85	192	GG	3525	487.55	-	95.0	190	90

Every effort has been taken to ensure that the data listed in this catalogue is correct.
Finer Power Transmissions P/L will not accept liability for any damage or loss caused as a result of the data in this catalogue.

14M HTD Timing Pulleys (Taper Lock)

Size	Z	Mat	Bush	Outside Dia.	Hub Dia.	W	d3	Max. Bore
28-14M-40	28	GG	2012	122.12	127	54	-	50
28-14M-55	28	GG	2012	122.12	127	70	-	50
28-14M-85	28	GG	2517	122.12	127	102	-	60
28-14M-115	28	GG	2517	122.12	127	133	-	60
29-14M-40	29	GG	2012	126.57	138	54	-	50
29-14M-55	29	GG	2012	126.57	138	70	-	50
29-14M-85	29	GG	2517	126.57	138	102	-	60
29-14M-115	29	GG	2517	126.57	138	133	-	60
30-14M-40	30	GG	2012	130.99	138	54	-	50
30-14M-55	30	GG	2517	130.99	138	70	-	60
30-14M-85	30	GG	2517	130.99	138	102	-	60
30-14M-115	30	GG	2517	130.99	138	133	-	60
32-14M-40	32	GG	2012	139.88	154	54	-	50
32-14M-55	32	GG	2517	139.88	154	70	-	60
32-14M-85	32	GG	2517	139.88	154	102	-	60
32-14M-115	32	GG	2517	139.88	154	133	-	60
34-14M-40	34	GG	2517	148.79	160	54	-	60
34-14M-55	34	GG	2517	146.79	160	70	-	60
34-14M-85	34	GG	2517	146.79	160	102	-	60
34-14M-115	34	GG	2517	146.79	160	133	-	60
36-14M-40	36	GG	2517	157.68	168	54	-	60
36-14M-55	36	GG	2517	157.68	168	70	-	60
36-14M-85	36	GG	3020	157.68	168	102	-	75
36-14M-115	36	GG	3020	157.68	168	133	-	75
38-14M-40	38	GG	2517	166.6	183	54	-	60
38-14M-55	38	GG	2517	166.6	183	70	-	60
38-14M-85	38	GG	3020	166.6	183	102	-	75
38-14M-115	38	GG	3020	166.6	183	133	-	75
40-14M-40	40	GG	2517	175.49	188	54	-	60
40-14M-55	40	GG	2517	175.49	188	70	-	60
40-14M-85	40	GG	3020	175.49	188	102	-	75
40-14M-115	40	GG	3020	175.49	188	133	-	75
44-14M-40	44	GG	3020	193.28	211	54	-	75
44-14M-55	44	GG	3020	293.28	211	70	-	75
44-14M-85	44	GG	3030	293.28	211	102	-	75
44-14M-115	44	GG	3030	293.28	211	133	-	75
48-14M-40	48	GG	3020	211.11	226	54	-	75
48-14M-55	48	GG	3020	211.11	226	70	-	75
48-14M-85	48	GG	3030	211.11	226	102	-	75
48-14M-115	48	GG	3030	211.11	226	133	-	75
56-14M-40	56	GG	3020	246.76	256	54	170	75
56-14M-55	56	GG	3020	246.76	256	70	170	75
56-14M-85	56	GG	3535	246.76	256	102	190	90
56-14M-115	56	GG	3535	246.76	256	133	-	90
64-14M-40	64	GG	3020	282.41	296	54	170	75
64-14M-55	64	GG	3020	282.41	296	70	170	75
64-14M-85	64	GG	3525	282.41	296	102	190	90
64-14M-115	64	GG	3535	282.41	296	133	190	90
72-14M-40	72	GG	3020	318.06	-	54	170	75
72-14M-55	72	GG	3020	318.06	-	70	170	75
72-14M-85	72	GG	3535	318.06	-	102	190	90
72-14M-115	72	GG	3535	318.06	-	133	190	90
80-14M-40	80	GG	3535	353.71	-	133	190	90
80-14M-55	80	GG	3020	353.71	-	70	170	75
80-14M-85	80	GG	3525	353.71	-	102	190	90
80-14M-115	80	GG	3535	353.71	-	133	190	90

Table continue next page.

Every effort has been taken to ensure that the data listed in this catalogue is correct.
Finer Power Transmissions P/L will not accept liability for any damage or loss caused as a result of the data in this catalogue.

14M HTD Timing Pulleys (Taper Lock)

Size	Z	Mat	Bush	Outside Dia.	Hub Dia.	W	d3	Max. Bore
90-14M-40	90	GG	3020	398.28	-	54	170	75
90-14M-55	90	GG	3020	398.28	-	70	170	75
90-14M-85	90	GG	3525	398.28	-	89	190	90
90-14M-115	90	GG	3535	398.28	-	133	190	90
112-14M-40	112	GG	3020	496.32	-	54	170	75
112-14M-55	112	GG	3020	496.32	-	70	170	75
112-14M-85	112	GG	3525	496.32	-	70	170	75
112-14M-115	112	GG	3535	496.32	-	133	190	90
144-14M-40	144	GG	3020	638.92	-	54	170	75
144-14M-55	144	GG	3020	638.92	-	70	170	75
144-14M-85	144	GG	3535	638.92	-	102	190	90
144-14M-115	144	GG	4040	638.92	-	133	230	100
168-14M-40	168	GG	3020	745.87	-	54	170	75
168-14M-55	168	GG	3020	745.87	-	70	170	75
168-14M-85	168	GG	3525	745.87	-	89	190	90
168-14M-115	168	GG	4040	745.87	-	133	230	100
192-14M-40	192	GG	3020	852.82	-	54	170	75
192-14M-55	192	GG	3020	852.82	-	70	170	75
192-14M-85	192	GG	4040	852.82	-	102	230	100
192-14M-115	192	GG	4040	852.82	-	133	230	100
216-14M-40	216	GG	3020	959.76	-	54	170	75
216-14M-55	216	GG	3535	959.76	-	-	-	-
216-14M-85	216	GG	4040	959.76	-	102	230	100
216-14M-115	216	GG	4040	959.76	-	133	230	100

Every effort has been taken to ensure that the data listed in this catalogue is correct.
Finer Power Transmissions P/L will not accept liability for any damage or loss caused as a result of the data in this catalogue.

Size	Type	Material	No. of Teeth	d(d)	d(a)	D(B)	b(1)	B (mm)	D (mm)	Pilot Bore d (mm)	Finished Bore Hole (max)	Approx Kg
21-T5-10PB	6F	AL	10	15.92	15.05	19.5	15	21	8	-	5	0.012
21-T5-12PB	6F	AL	12	19.01	18.25	23	15	21	10	-	6	0.016
21-T5-14PB	6F	AL	14	22.29	21.45	25	15	21	13	-	8	0.019
21-T5-15PB	6F	AL	15	23.88	23.05	28	15	21	16	6	10	0.021
21-T5-16PB	6F	AL	16	25.47	24.6	32	15	21	18	6	11	0.025
21-T5-18PB	6F	AL	18	28.65	27.8	32	15	21	19	6	12	0.031
21-T5-19PB	6F	AL	19	30.25	29.4	36	15	21	22	6	12	0.036
21-T5-20PB	6F	AL	20	31.83	31	36	15	21	23	6	14	0.038
21-T5-22PB	6F	AL	22	35.12	34.25	38	15	21	24	6	15	0.046
21-T5-24PB	6F	AL	24	38.21	37.4	42	15	21	26	6	15	0.054
21-T5-25PB	6F	AL	25	39.8	39	44	15	21	26	6	15	0.058
21-T5-26PB	6F	AL	26	41.47	40.6	44	15	21	26	6	16	0.062
21-T5-27PB	6F	AL	27	42.98	42.2	48	15	21	30	8	18	0.064
21-T5-28PB	6F	AL	28	44.62	43.75	48	15	21	32	8	18	0.071
21-T5-30PB	6F	AL	30	47.76	46.95	51	15	21	34	8	18	0.075
21-T5-32PB	6F	AL	32	50.94	50.1	54	15	21	38	8	22	0.088
21-T5-36PB	6F	AL	36	57.31	56.45	63	15	21	38	8	22	0.114
21-T5-40PB	6F	AL	40	63.66	62.85	66	15	21	40	8	23	0.138
21-T5-42PB	6F	AL	42	66.87	66	71	15	21	40	8	24	0.18
21-T5-44PB	6F	AL	44	70.07	69.2	-	15	21	45	8	26	0.185
21-T5-48PB	6F	AL	48	76.42	75.55	-	15	21	50	8	28	0.2
21-T5-60PB	6F	AL	60	95.52	94.65	-	15	21	65	8	35	0.307
27-T5-10PB	6F	AL	10	15.92	15.05	19.5	21	27	8	-	5	0.016
27-T5-12PB	6F	AL	12	19.01	18.25	23	21	27	10	-	6	0.022
27-T5-14PB	6F	AL	14	22.29	21.45	25	21	27	13	-	8	0.026
27-T5-15PB	6F	AL	15	23.88	23.05	28	21	27	16	6	10	0.029
27-T5-16PB	6F	AL	16	25.47	24.6	32	21	27	18	6	11	0.035
27-T5-18PB	6F	AL	18	28.65	27.8	32	21	27	19	6	12	0.043
27-T5-19PB	6F	AL	19	30.25	29.4	36	21	27	22	6	12	0.049
27-T5-20PB	6F	AL	20	31.83	31	36	21	27	23	6	14	0.053
27-T5-22PB	6F	AL	22	35.12	34.25	38	21	27	24	6	15	0.054
27-T5-24PB	6F	AL	24	38.21	37.4	42	21	27	26	6	15	0.076
27-T5-25PB	6F	AL	25	39.8	39	44	21	27	26	6	15	0.081
27-T5-26PB	6F	AL	26	41.47	40.6	44	21	27	26	6	16	0.085
27-T5-27PB	6F	AL	27	42.98	42.2	-	21	27	30	8	18	0.09
27-T5-28PB	6F	AL	28	44.62	43.75	48	21	27	32	8	18	0.092
27-T5-30PB	6F	AL	30	47.76	46.95	51	21	27	34	8	18	0.105
27-T5-32PB	6F	AL	32	50.94	50.1	54	21	27	38	8	22	0.123
27-T5-36PB	6F	AL	36	57.31	56.45	63	21	27	38	8	22	0.16
27-T5-40PB	6F	AL	40	63.66	62.85	66	21	27	40	8	23	0.193
27-T5-42PB	6F	AL	42	66.87	66	71	21	27	40	8	24	0.205
27-T5-44PB	6F	AL	44	70.07	69.2	-	21	27	45	8	26	0.228
27-T5-48PB	6F	AL	48	76.42	75.55	-	21	27	50	8	28	0.28
27-T5-60PB	6F	AL	60	95.52	94.65	-	21	27	65	8	35	0.43
36-T5-10PB	6F	AL	10	15.92	15.05	19.5	30	36	8	-	5	0.023
36-T5-12PB	6F	AL	12	19.01	18.25	23	30	36	10	-	6	0.031
36-T5-14PB	6F	AL	14	22.29	21.45	25	30	36	13	-	8	0.037
36-T5-15PB	6F	AL	15	23.88	23.05	28	30	36	16	6	10	0.041
36-T5-16PB	6F	AL	16	25.47	24.6	32	30	36	18	6	11	0.05
36-T5-18PB	6F	AL	18	28.65	27.8	32	30	36	19	6	12	0.061
36-T5-19PB	6F	AL	19	30.25	29.4	36	30	36	22	6	12	0.07
36-T5-20PB	6F	AL	20	31.83	31	36	30	36	23	6	14	0.76
36-T5-22PB	6F	AL	22	35.12	34.25	38	30	36	24	6	15	0.8
36-T5-24PB	6F	AL	24	38.21	37.4	42	30	36	26	6	15	0.109
36-T5-25PB	6F	AL	25	39.8	39	44	30	36	26	6	15	0.116

Every effort has been taken to ensure that the data listed in this catalogue is correct.
Finer Power Transmissions P/L will not accept liability for any damage or loss caused as a result of the data in this catalogue.

Size	Type	Material	No. of Teeth	d(d)	d(a)	D(B)	b(1)	B (mm)	D (mm)	Pilot Bore d (mm)	Finished Bore Hole (max)	Approx Kg
36-T5-26PB	6F	AL	26	41.47	40.6	44	30	36	26	8	16	0.12
36-T5-27PB	6F	AL	27	42.98	42.2	48	30	36	30	8	18	0.128
36-T5-28PB	6F	AL	28	44.62	43.75	48	30	36	32	8	18	0.135
36-T5-30PB	6F	AL	30	47.76	46.95	51	30	36	34	8	18	0.15
36-T5-32PB	6F	AL	32	50.94	50.1	54	30	36	38	8	22	0.176
36-T5-36PB	6F	AL	46	57.31	56.45	63	30	36	38	8	22	0.23
36-T5-40PB	6F	AL	40	63.66	62.85	66	30	36	40	8	23	0.273
36-T5-42PB	6F	AL	42	66.87	66	71	30	36	40	8	24	0.284
36-T5-44PB	6	AL	44	70.07	69.2	-	30	36	45	8	26	0.315
36-T5-48PB	6	AL	48	76.42	75.55	-	30	36	50	8	28	0.4
36-T5-60PB	6	AL	60	95.52	94.65	-	30	36	65	8	35	0.614
31-T10-12PB	6F	AL	12	38.2	36.35	42	21	31	28	6	16	0.076
31-T10-14PB	6F	AL	14	44.56	42.7	48	21	31	32	8	18	0.104
31-T10-15PB	6F	AL	15	47.75	45.9	51	21	31	32	8	18	0.116
31-T10-16PB	6F	AL	16	50.93	49.05	54	21	31	35	8	20	0.134
31-T10-18PB	6F	AL	18	57.29	55.45	60	21	31	40	8	22	0.167
31-T10-19PB	6F	AL	19	60.48	58.6	66	21	31	44	8	22	0.184
31-T10-20PB	6F	AL	20	63.66	61.8	66	21	31	46	8	24	0.208
31-T10-22PB	6F	AL	22	70.03	68.15	75	21	31	52	8	28	0.253
31-T10-24PB	6F	AL	24	76.39	74.55	83	21	31	58	8	30	0.288
31-T10-25PB	6F	AL	25	79.58	77.7	83	21	31	60	8	30	0.31
31-T10-26PB	6F	AL	26	82.76	80.9	87	21	31	60	8	30	0.357
31-T10-27PB	6F	AL	27	85.95	84.1	91	21	31	60	8	30	0.364
31-T10-28PB	6F	AL	28	89.13	87.25	93	21	31	60	8	30	0.401
31-T10-30PB	6F	AL	30	95.49	93.65	97	21	31	60	8	30	0.441
31-T10-32PB	6F	AL	32	101.86	100	106	21	31	65	10	32	0.493
31-T10-36PB	6F	AL	36	114.59	112.75	119	21	31	70	10	35	0.623
31-T10-40PB	6F	AL	40	127.32	125.45	131	21	31	80	10	40	0.767
31-T10-44PB	6F	AL	44	140.06	138.2	-	21	31	88	10	46	0.993
31-T10-48PB	6F	AL	48	152.78	150.95	-	21	31	95	16	48	1.09
31-T10-60PB	6F	AL	60	190.98	189.1	-	21	31	110	16	60	1.71
40-T10-12PB	6F	AL	12	38.2	36.35	42	30	40	28	5	16	0.099
40-T10-14PB	6F	AL	14	44.56	42.7	48	30	40	32	8	18	0.134
40-T10-15PB	6F	AL	15	47.75	45.9	51	30	40	32	8	18	0.152
40-T10-16PB	6F	AL	16	50.93	49.05	54	30	40	35	8	20	0.176
40-T10-18PB	6F	AL	18	57.29	55.45	60	30	40	40	8	22	0.224
40-T10-19PB	6F	AL	19	60.48	58.6	66	30	40	44	8	22	0.247
40-T10-20PB	6F	AL	20	63.66	61.8	66	30	40	46	8	24	0.276
40-T10-22PB	6F	AL	22	70.03	68.15	75	30	40	52	8	28	0.337
40-T10-24PB	6F	AL	24	76.39	74.55	83	30	40	58	8	30	0.392
40-T10-25PB	6F	AL	25	79.58	77.7	83	30	40	60	8	30	0.422
40-T10-26PB	6F	AL	26	82.76	80.9	87	30	40	60	8	30	0.477
40-T10-27PB	6F	AL	27	85.95	84.1	91	30	40	60	8	30	0.536
40-T10-28PB	6F	AL	28	89.13	87.25	93	30	40	60	8	30	0.54
40-T10-30PB	6F	AL	30	95.94	93.65	97	30	40	60	8	30	0.64
40-T10-32PB	6F	AL	32	101.86	100	106	30	40	65	10	32	0.693
40-T10-36PB	6F	AL	36	114.59	112.75	119	30	40	70	10	35	0.873
40-T10-40PB	6F	AL	40	127.32	125.45	131	30	40	80	10	40	1.067
40-T10-44PB	6	AL	44	140.06	138.2	-	30	40	88	10	46	1.35
40-T10-48PB	6	AL	48	152.78	150.95	-	30	40	95	16	48	1.516
40-T10-60PB	6	AL	60	190.98	189.1	-	30	40	110	16	60	2.339
47-T10-18PB	6F	AL	18	57.29	55.45	60	37	47	40	10	22	0.253
47-T10-19PB	6F	AL	19	60.48	58.6	66	37	47	44	10	22	0.286
47-T10-20PB	6F	AL	20	63.66	61.8	66	37	47	46	12	24	0.322
47-T10-22PB	6F	AL	22	70.03	68.15	75	37	47	52	12	28	0.393

Every effort has been taken to ensure that the data listed in this catalogue is correct.
Finer Power Transmissions P/L will not accept liability for any damage or loss caused as a result of the data in this catalogue.

Size	Type	Material	No. of Teeth	d(d)	d(a)	D(B)	b(1)	B (mm)	D (mm)	Pilot Bore d (mm)	Finished Bore Hole (max)	Approx Kg
47-T10-24PB	6F	AL	24	76.39	74.55	83	37	47	58	12	30	0.475
47-T10-25PB	6F	AL	25	79.58	77.7	83	37	47	60	12	30	0.527
47-T10-26PB	6F	AL	26	82.76	80.9	87	37	47	60	12	30	0.564
47-T10-27PB	6F	AL	27	85.59	84.1	91	37	47	60	12	30	0.602
47-T10-28PB	6F	AL	28	89.13	87.25	93	37	47	60	12	30	0.642
47-T10-30PB	6F	AL	30	95.49	93.65	97	37	47	60	12	30	0.74
47-T10-32PB	6F	AL	32	101.86	100	106	37	47	65	12	32	0.844
47-T10-36PB	6F	AL	36	114.59	112.75	119	37	47	70	16	35	1.083
47-T10-40PB	6F	AL	40	127.32	125.45	131	37	47	80	16	40	1.317
47-T10-44PB	6	AL	44	140.06	138.2	-	37	47	88	16	46	1.611
47-T10-48PB	6	AL	48	152.78	150.95	-	37	47	95	16	48	1.931
47-T10-60PB	6	AL	60	190.98	189.1	-	37	47	110	16	60	3.004
66-T10-18PB	6F	AL	18	57.29	55.45	60	56	66	40	10	22	0.422
66-T10-19PB	6F	AL	19	60.48	58.6	66	56	66	44	10	22	0.466
66-T10-20PB	6F	AL	20	63.66	61.8	66	56	66	46	12	24	0.52
66-T10-22PB	6F	AL	22	70.03	68.15	75	56	66	52	12	28	0.57
66-T10-24PB	6F	AL	24	76.39	74.55	83	56	66	58	12	30	0.736
66-T10-25PB	6F	AL	25	79.58	77.7	83	56	66	60	12	30	0.766
66-T10-26PB	6F	AL	26	82.76	80.9	87	56	66	60	12	30	0.816
66-T10-27PB	6F	AL	27	85.95	84.1	91	56	66	60	12	30	0.946
66-T10-28PB	6F	AL	28	89.13	87.25	93	56	66	60	12	30	0.96
66-T10-30PB	6F	AL	30	95.49	93.65	97	56	66	60	12	30	1.169
66-T10-32PB	6F	AL	32	101.86	100	106	56	66	65	12	32	1.3
66-T10-36PB	6F	AL	36	114.59	112.75	119	56	66	70	16	35	1.637
66-T10-40PB	6F	AL	40	127.32	125.45	131	56	66	80	16	40	1.000
66-T10-44PB	6	AL	44	140.06	138.2	-	56	66	88	16	46	2.357
66-T10-48PB	6	AL	48	152.78	150.95	-	56	66	95	16	48	2.83
66-T10-60PB	6	AL	60	190.98	189.1	-	56	66	110	16	60	4.366

Every effort has been taken to ensure that the data listed in this catalogue is correct.
Finer Power Transmissions P/L will not accept liability for any damage or loss caused as a result of the data in this catalogue.

Constructed from cast iron, this range of Mi-Lock pulleys can handle both A and B section belts (NB. Pitch circle sizing is based on PCD of A section). Mi-Lock pulleys can be put together to make mutli-groove pulleys of varying sections and sizes which allow you to reduce your total inventory.

MI-LOCK V-PULLEYS

Finer Part	Pulley Size Pitch A	Pulley Size Pitch B	Outside Diamter	Mass Kg	Suitable Bush & Size
71MM-MI-LOCK	71MM	81MM	88MM	0.42	No 1
75MM-MI-LOCK	75MM	85MM	92MM	0.47	No 1
80MM-MI-LOCK	80MM	90MM	97MM	0.53	No 1
85MM-MI-LOCK	85MM	95MM	102MM	0.62	No 1
90MM-MI-LOCK	90MM	100MM	107MM	0.72	No 1
95MM-MI-LOCK	95MM	105MM	111MM	0.80	No 1
100MM-MI-LOCK	100MM	110MM	117MM	0.91	No 1
106MM-MI-LOCK	106MM	116MM	123MM	1.02	No 1
112MM-MI-LOCK	112MM	122MM	129MM	0.98	No 1
118MM-MI-LOCK	118MM	128MM	135MM	1.05	No 1
125MM-MI-LOCK	125MM	135MM	142MM	1.17	No 1
132MM-MI-LOCK	132MM	142MM	149MM	1.28	No 1
140MM-MI-LOCK	140MM	150MM	157MM	1.49	No 2
150MM-MI-LOCK	150MM	160MM	167MM	1.61	No 2
160MM-MI-LOCK	160MM	170MM	177MM	1.75	No 2
180MM-MI-LOCK	180MM	190MM	197MM	2.03	No 2
200MM-MI-LOCK	200MM	209MM	216MM	2.38	No 2
224MM-MI-LOCK	224MM	233MM	240MM	3.34	No 2
250MM-MI-LOCK	250MM	259MM	266MM	4.22	No 2
280MM-MI-LOCK	280MM	289MM	296MM	4.34	No 2
315MM-MI-LOCK	315MM	324MM	331MM	4.45	No 2
355MM-MI-LOCK	355MM	364MM	371MM	4.94	No 2
400MM-MI-LOCK	400MM	409MM	416MM	7.51	No 2
450MM-MI-LOCK	450MM	459MM	466MM	9.05	No 2

MI-LOCK No 1 Bushes

Bore Size	
Metric	Imperial
10mm	3/8"
12mm	7/16"
14mm	1/2"
15mm	9/16"
16mm	5/8"
18mm	11/16"
19mm	3/4"
20mm	13/16"
22mm	7/8"
24mm	15/16"
25mm	1"
28mm	1-1/16"
	1-1/8"

MI-LOCK No 2 Bushes

Bore Size			
Metric		Imperial	
16mm	32mm	1/2"	1-1/8"
18mm	35mm	9/16"	1-1/16"
19mm	38mm	5/8"	1-3/16"
20mm	40mm	11/16"	1-1/4"
22mm	42mm	3/4"	1-5/16"
24mm		13/16"	1-3/8"
25mm		7/8"	1-7/16"
28mm		15/16"	1-1/2"
30mm		1"	1-9/16"

Also stocked: No 1 Long Bolt to Suit Twin Pulley, No 1 Bush Retainer Kit, No 2 Long Bolt to Suit Twin Pulley, No 2 Bush Retainer Kit.

Every effort has been taken to ensure that the data listed in this catalogue is correct.
Finer Power Transmissions P/L will not accept liability for any damage or loss caused as a result of the data in this catalogue.

Finer stocks a range of quality V-Belt Pulleys. Constructed from cast iron, each pulley is Taper Locked to accommodate a range of shaft sizes.
Finer pulleys undergo stringent balancing tests to ensure each pulley functions efficiently. The pulleys are finished in a black coating that acts as a primer to help protect the pulleys from environmental factors.

Finer Power Transmissions carry a range of Taper Lock V-Belt Pulleys in:
SPZ, SPA, SPB and SPC.

Groove Dimensions

Size	dp		f	e	g	h	b
SPZ	<80	34	8	12	9.7	9	2
	>80	38			9.9		
SPA	<118	34	10	15	12.7	11	2.75
	>118	38			12.9		
SPB	<190	34	12.5	19	16.1	14	3.5
	>190	38			16.4		
SPC	<315	34	17	25.5	21.9	19	4.8
	>315	38			22.3		

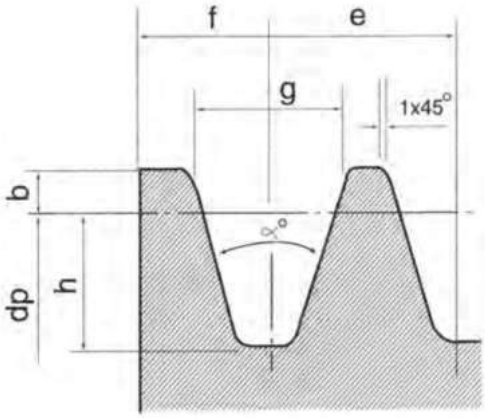

V-Belt Pulley Selection Table

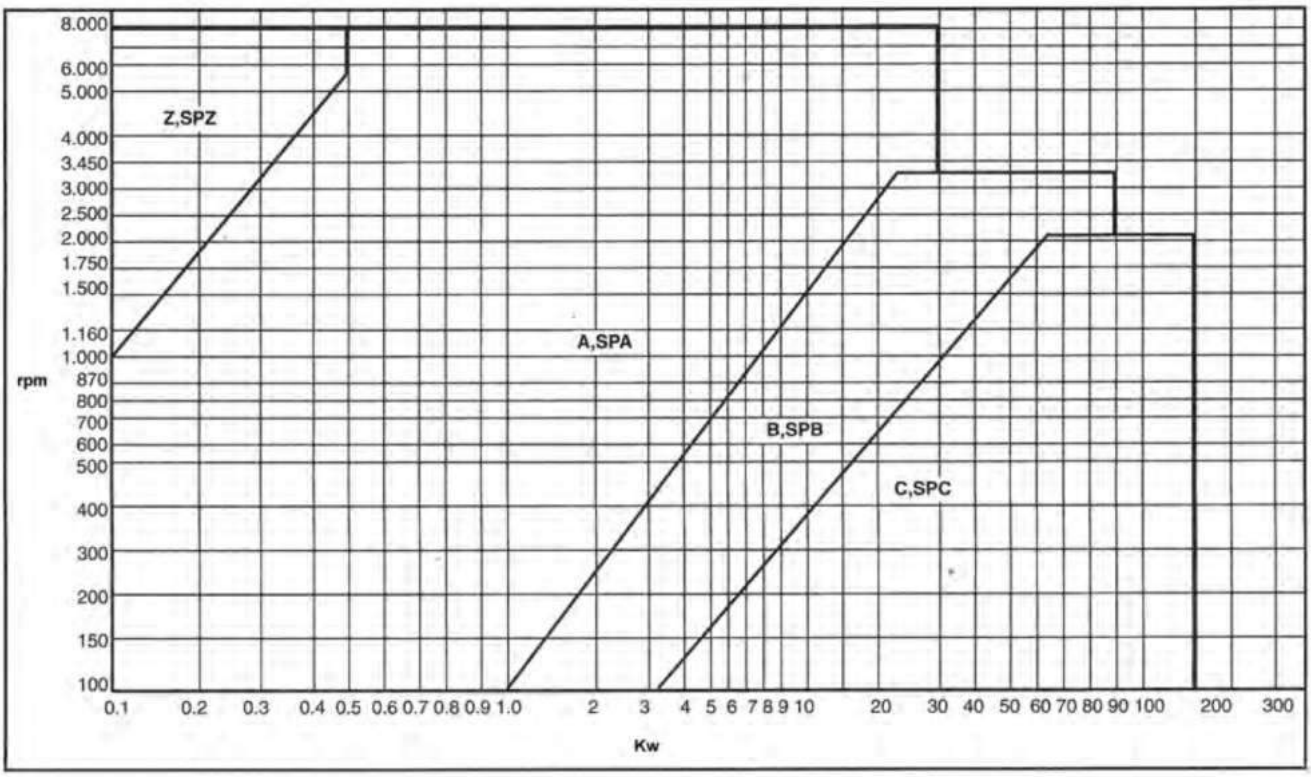

Every effort has been taken to ensure that the data listed in this catalogue is correct.
Finer Power Transmissions P/L will not accept liability for any damage or loss caused as a result of the data in this catalogue.

V-Belt Pulley

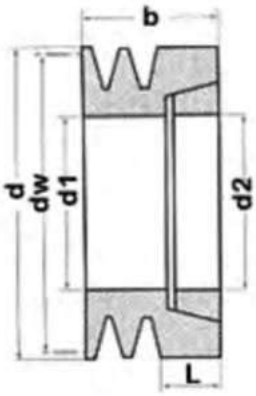

Type 1

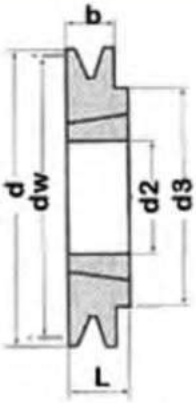

Type 2

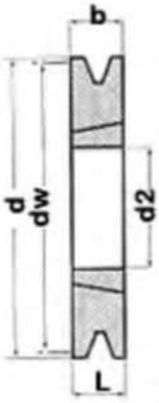

Type 3

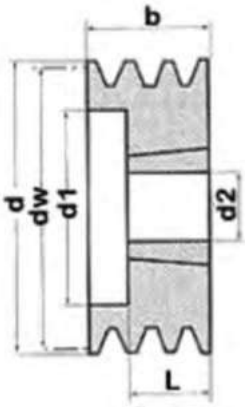

Type 4

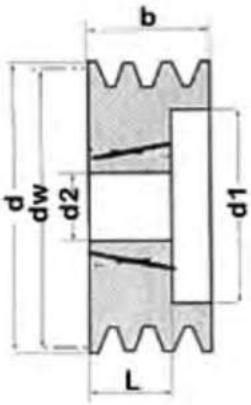

Type 5

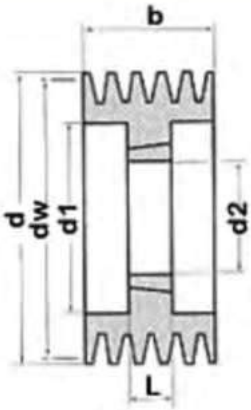

Type 6

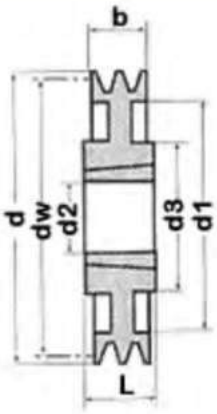

Type 7

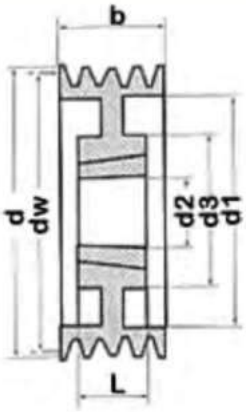

Type 8

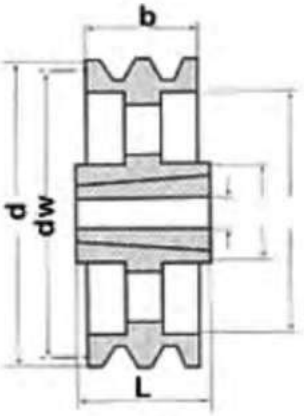

Type 9

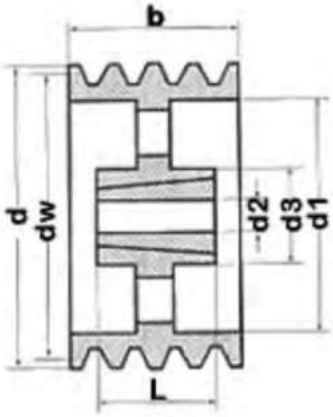

Type 10

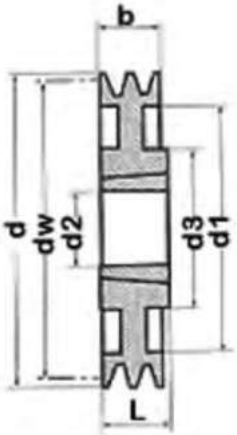

Type 11

Every effort has been taken to ensure that the data listed in this catalogue is correct.
Finer Power Transmissions P/L will not accept liability for any damage or loss caused as a result of the data in this catalogue.

Pulley (dw)	Grooves	Bush	d2 Max	b	d	App. Kg
63	1	1008/1108	25/28	20	69	0.6
	2	1008/1108	25/28	35	69	0.8
67	1	1108	28	20	73	0.4
	2	1108	28	35	73	0.6
71	1	1108	28	20	79	0.4
	2	1108	28	35	79	0.6
	3	1108	28	50	79	0.8
	4	1210	28	65	79	1.0
75	1	1108	28	20	80.6	0.5
	2	1108	28	35	80.6	0.7
	3	1210	28	50	80.6	0.9
80	1	1210	32	20	85.6	0.5
	2	1108/1210	28/32	35	85.6	0.75
	3	1210	32	50	85.6	0.95
85	1	1210	32	20	90.6	0.6
	2	1210	32	35	90.6	0.8
	3	1210	32	50	90.6	1.00
90	1	1210	32	20	95.6	0.7
	2	1610	42	35	95.6	0.8
	3	1610	42	50	95.6	1.05
	4	1615	42	65	95.6	1.35
95	1	1210	32	20	100.6	0.8
	2	1610	42	35	100.6	1
	3	1610	42	50	100.6	1.2
	4	1615	42	65	100.6	1.5
100	1	1610	42	20	105.6	0.85
	2	1610	42	35	105.6	1
	3	1610	42	50	105.6	1.40
	4	1610/1615	42	65	105.6	1.8
	5	1615	42	80	105.6	2.2
	6	1610/1615	42	95	105.6	2.35
106	1	1610	42	20	111.6	1
	2	1610	42	35	111.6	1.3
	3	1610	42	50	111.6	1.5
	4	2012	50	65	111.6	1.7
	5	2012	50	80	111.6	2.10
	6	2012	50	95	111.6	2.4
112	1	1610	42	20	117.6	1.05
	2	1610	42	35	117.6	1.35
	3	2012	50	50	117.6	1.8
	4	2012	50	65	117.6	2
	5	2012	50	80	117.6	2.5
	6	2012	50	95	117.6	2.7
118	1	1610	42	2	123.6	1.2
	2	1610	42	4	123.6	1.6
	3	2012	50	5	123.6	1.85
	4	2012	50	5	123.6	2.2
	5	2012	50	5	123.6	2.7
	6	2012	50	4	123.6	3

Every effort has been taken to ensure that the data listed in this catalogue is correct.
Finer Power Transmissions P/L will not accept liability for any damage or loss caused as a result of the data in this catalogue.

Pulley (dw)	Grooves	Bush	d2 Max	b	d	App. Kg
125	1	1610	42	20	130.6	1.35
	2	1610	42	35	130.6	1.85
	3	2012	50	50	130.6	2.25
	4	2012	50	65	130.6	2.7
	5	2012	50	80	130.6	3.1
	6	2012	50	95	130.6	3.5
132	1	1610	42	20	137.6	1.6
	2	2012	50	35	137.6	2.1
	3	2012	50	50	137.6	2.55
	4	2517	65	65	137.6	2.8
	5	2517	65	80	137.6	3.3
	6	2517	65	95	137.6	3.8
140	1	1610	42	20	145.6	1.8
	2	2012	50	35	145.6	2.5
	3	2517	65	50	145.6	2.8
	4	2517	65	65	145.6	3.8
	5	2517	65	80	145.6	4
	6	2517	65	95	145.6	4.65
150	1	1610	42	20	155.6	2.2
	2	2012	50	35	155.6	3
	3	2517	65	50	155.6	3.55
	4	2517	65	65	155.6	4.1
	5	2517	65	80	155.6	4.9
	6	2517	65	95	155.6	5.2
160	1	1610	42	20	165.6	1.85
	2	2012	50	35	165.6	3.5
	3	2517	65	50	165.6	4.4
	4	2517	65	65	165.6	5.1
	5	2517	65	80	165.6	5.5
	6	2517	65	95	165.6	6.2
170	1	1610	42	20	175.6	2
	2	2012	50	35	175.6	3.3
	3	2517	65	50	175.6	4.5
	4	2517	65	65	175.6	5.9
	5	2517	65	80	175.6	6.6
180	1	1610	42	20	185.6	2
	2	2012	50	35	185.6	3.8
	3	2517	65	50	185.6	6
	4	2517	65	65	185.6	6.65
	5	3020	75	80	185.6	6.8
	6	3020	75	95	185.6	9.3
190	1	1610	42	20	195.6	2.7
	2	2012	50	35	195.6	4.4
	3	2517	65	50	195.6	5.5
	4	2517	65	65	195.6	6.5
	5	3020	75	80	195.6	7.5

Every effort has been taken to ensure that the data listed in this catalogue is correct.
Finer Power Transmissions P/L will not accept liability for any damage or loss caused as a result of the data in this catalogue.

Pulley (dw)	Grooves	Bush	d2 Max	b	d	App. Kg
200	1	2012	50	20	205.6	3
	2	2517	65	35	205.6	4.4
	3	2517	65	50	205.6	5.2
	4	3020	75	65	205.6	8.3
	5	3020	75	80	205.6	8.9
	6	3020	75	95	205.6	9.8
212	1	2012	50	20	217.6	2.9
	2	2517	65	35	217.6	4.7
	3	2517	65	50	217.6	6
	4	3020	75	65	217.6	8
224	1	2012	50	20	229.6	3.25
	2	2517	65	35	229.6	5.25
	3	2517	65	50	229.6	6.2
	4	3020	75	65	229.6	11.2
	5	3020	75	80	229.6	12.1
	6	3020	75	95	229.6	13.4
236	1	2012	50	20	241.6	3.2
	2	2517	65	35	241.6	5.4
	3	2517	65	50	241.6	6.6
	4	3020	75	65	241.6	9.8
	5	3020	75	80	241.6	12.2
250	1	2012	50	20	255.6	3.8
	2	2517	65	35	255.6	5.8
	3	2517	65	50	255.6	6.55
	4	3020	75	65	255.6	9.7
	5	3020	75	80	255.6	10.5
	6	3020	75	95	255.6	11.7
280	1	2012	50	20	285.6	4.7
	2	2517	65	35	285.6	6.4
	3	2517	65	50	285.6	8.9
	4	3020	75	65	285.6	10.40
	5	3535	90	80	285.6	15.1
	6	3535	90	95	285.6	16.7
300	1	2012	50	20	305.6	7.3
	2	2517	65	35	305.6	4.8
	3	3020	75	50	305.6	10
315	1	2012	50	20	320.6	4.9
	2	2517	65	35	320.6	7.5
	3	3020	75	50	320.6	11.8
	4	3020	75	65	320.6	15.5
	5	3535	90	80	320.6	17.3
	6	3535	90	95	320.6	18.9
335	4	3020	75	65	340.6	12.8
355	1	2012	50	20	360.6	5.5
	2	2517	65	35	360.6	8.8
	3	3020	75	50	360.6	12.2
	4	3020	75	65	360.6	13.5
	5	3535	90	80	360.6	20.2
	6	3535	90	95	360.6	21

Every effort has been taken to ensure that the data listed in this catalogue is correct.
Finer Power Transmissions P/L will not accept liability for any damage or loss caused as a result of the data in this catalogue.

Pulley (dw)	Grooves	Bush	d2 Max	b	d	App. Kg
400	1	2012	50	20	405.6	5.91
	2	2517	65	35	405.6	9.35
	3	3020	75	50	405.6	13.32
	4	3020	75	65	405.6	15.45
	5	3535	90	80	405.6	22.09
	6	3535	90	95	405.6	24.25
450	1	2012/2517	50/65	20	455.6	6.77
	2	2517	65	35	455.6	10.62
	3	3020	75	50	455.6	15.11
	4	3020	75	65	455.6	17.94
	5	3535	90	80	455.6	24.65
	6	3535	90	95	455.6	27.31
500	1	2517	65	20	505.6	6.5
	2	2517	65	35	505.6	12.11
	3	3020	75	50	505.6	17.09
	4	3020	75	65	505.6	20.07
	5	3535	90	80	505.6	27.33
	6	3535	90	95	505.6	30.55
630	1	2517	65	20	635.6	16.00
	2	3020	75	35	635.6	17.8
	3	3020	75	50	635.6	22.68
	4	3535	90	65	635.6	31.17
	5	3535	90	80	635.6	35.31
	6	4040	100	95	635.6	47.72
800	3	3535	90	50	805.6	34.76
	4	3535	90	65	805.6	41.11
	5	4040	100	80	805.6	54.54
	6	4040	100	95	805.6	59.75
1000	3	3535	90	50	1005.6	45.99
	4	4040	100	65	1005.6	63.94
	5	4545	110	80	1005.6	76.41
	6	4545	110	95	1005.6	85.40

Every effort has been taken to ensure that the data listed in this catalogue is correct.
Finer Power Transmissions P/L will not accept liability for any damage or loss caused as a result of the data in this catalogue.

Pulley (dw)	Grooves	Bush	d2 Max	b	d	App. Kg
75	1	1108/1210	28	20	80.6	0.5
	2	1108	28	35	80.6	0.6
80	1	1108/1210	28/32	25	87	0.5
	2	1108/1210	28/32	44	87	0.7
	3	1108/1210	28/32	63	87	1.1
85	1	1210	32	25	92	0.6
	2	1210	32	44	92	0.8
90	1	1210	32	25	97	0.6
	2	1210	32	44	97	1
	3	1210	32	63	97	1.3
95	1	1210/1610	32/42	25	102	1
	2	1210/1610	32/42	44	102	1.2
100	1	1610	42	25	107	0.88
	2	1610	42	44	107	1.3
	3	1610	42	63	107	1.8
	4	1615	42	82	107	2.2
106	1	1610	42	25	112	1
	2	1610	42	44	112	1.5
	3	1610	42	63	112	2
	4	1610	42	82	112	2.5
	5	1615	42	101	112	2.75
112	1	1610	42	25	119	1.21
	2	1610	42	44	119	1.72
	3	1610	42	63	119	2.29
	4	1610	42	82	119	2.95
118	1	1610	42	25	125	1.4
	2	1610	42	44	125	1.94
	3	1610	42	63	125	2.55
	4	1610	42	82	125	3.2
125	1	1610	42	25	132	1.63
	2	2012	50	44	132	2.07
	3	2012	50	63	132	2.73
	4	2012	50	82	132	3.39
	5	2012	50	101	132	4.05
132	1	1610	42	25	139	1.87
	2	2012	50	44	139	2.4
	3	2012	50	63	139	3.11
	4	2012	50	82	139	3.82
	5	2012/2517	50/65	101	139	4.2
140	1	1610	42	25	147	2.16
	2	2012	50	44	147	2.81
	3	2012	50	63	147	3.56
	4	2517	65	82	147	4.85
	5	2517	65	101	147	4.49
	6	2517	65	120	147	5.53
150	1	1610	42	25	157	2.55
	2	2012	50	44	157	3.34
	3	2517	65	63	157	4.1
	4	2517	65	82	157	6.26
	5	2517	65	101	157	5.73
	6	2517	65	120	157	6.56

Every effort has been taken to ensure that the data listed in this catalogue is correct.
Finer Power Transmissions P/L will not accept liability for any damage or loss caused as a result of the data in this catalogue.

Pulley (dw)	Grooves	Bush	d2 Max	b	d	App. Kg
160	1	1610	42	25	167	2.97
	2	2012	50	44	167	3.92
	3	2517	65	63	167	4.7
	4	2517	65	82	167	5.78
	5	2517	65	101	167	6.67
	6	3020	75	120	167	6.20
170	1	1610	42	25	177	3.3
	2	2012	50	44	177	4.5
	3	2517	65	63	177	5.6
	4	2517	65	82	177	6.7
	5	3020	75	101	177	6.8
	6	3020	75	120	177	7.8
180	1	1610	42	158	187	3.9
	2	2517	65	44	187	5.62
	3	2517	65	63	187	6.91
	4	2517	65	82	187	7.68
	5	3020	75	101	187	7.89
	6	3020	75	120	187	8.91
	8	3020	75	158	187	12.21
190	1	2012	50	25	197	4.12
	2	2517	65	44	197	6.5
	3	2517	65	63	197	8.1
	4	2517	65	82	197	8.71
	5	3020	75	101	197	9.08
	6	3020	75	120	197	10.16
	8	3030	75	158	197	14.11
200	1	2012	50	25	207	4.64
	2	2517	65	44	207	7.53
	3	2517	65	63	207	9.31
	4	3020	75	82	207	9.38
	5	3020	75	101	207	10.58
	6	3020	75	120	207	11.78
	8	3535	90	158	207	15.22
	10	3535	-	-	207	-
212	1	2012	50	25	219	5.31
	2	2517	65	44	219	8.56
	3	2517	65	63	219	9.9
	4	3020	75	82	219	10.89
	5	3020	75	101	219	12.17
	6	3535	90	120	219	15.35
	8	3535	-	-	219	-
224	1	2012	50	25	231	6.01
	2	2517	65	44	231	9.60
	3	2517	65	63	231	11.30
	4	3020	75	82	231	12.48
	5	3020	75	101	231	13.89
	6	3535	90	120	231	18.02
	8	3535	90	158	231	20.75

Every effort has been taken to ensure that the data listed in this catalogue is correct.
Finer Power Transmissions P/L will not accept liability for any damage or loss caused as a result of the data in this catalogue.

Pulley (dw)	Grooves	Bush	d2 Max	b	d	App. Kg
236	1	2012	50	25	243	6.76
	2	2517	65	44	243	10.62
	3	2517	65	63	243	7.72
	4	3020	75	82	243	14.16
	5	3535	90	101	243	19.39
	6	3535	90	120	243	20.84
250	1	2012	50	25	257	7.68
	2	2517	65	44	257	6.7
	3	3020	75	63	257	12.6
	4	3020	75	82	257	16.08
	5	3535	90	101	257	22.77
	6	3535	90	120	257	24.31
	8	3535	90	158	257	27.39
265	2	2517	-	-	-	-
280	1	2012	50	25	287	4.13
	2	2517	65	44	287	7.53
	3	3020	75	63	287	10.74
	4	3020	75	82	287	13.4
	5	3535	90	101	287	19.15
	6	3535	90	120	287	21.04
	8	3535	90	158	287	25
300	1	2012	50	25	307	6.8
	2	2517	65	44	307	8.14
	3	3020	75	63	307	11.64
	4	3020/3535	75/90	82	307	14.92
	5	3535	90	101	307	20.67
	6	3535	90	120	307	22.75
	8	3535	90	158	307	30
315	1	2012	50	25	322	7.9
	2	2517	65	44	322	8.66
	3	3020	75	63	322	12.21
	4	3535	90	82	322	19.81
	5	3535	90	101	322	21.75
	6	3535	90	120	322	23.98
	8	3535	90	158	322	31
	10	3535	90	209	322	35
335	2	2517	65	44	342	11.3
	3	3020	75	63	342	12
	4	3535	90	82	342	16.4
	5	3535	90	82	342	20
	6	3535	90	82	342	26.30
	8	3535	90	82	342	33.50
355	2	3020	75	44	362	11.74
	3	3020	75	63	362	14.24
	4	3535	90	82	362	15.5
	5	3535	90	101	362	23.46
	6	3535	90	120	362	27.75
	8	3535	90	158	362	31.6
	10	4040	100	209	362	38.50
375	3	3020	-	-	-	-
400	2	3020	75	150	407	-

Every effort has been taken to ensure that the data listed in this catalogue is correct.
Finer Power Transmissions P/L will not accept liability for any damage or loss caused as a result of the data in this catalogue.

Pulley (dw)	Grooves	Bush	d2 Max	b	d	App. Kg
400	1	2517	-	40	407	-
	2	3020	75	44	407	13.87
	3	3535	90	63	407	18.60
	4	3535	90	82	407	23.15
	5	3535	90	101	407	26.63
	6	3535	90	120	407	29.36
	8	4040	100	158	407	40.00
	10	4040	100	158	407	40.50
450	2	3020/3535	75/90	63	457	14
	3	3535	90	82	457	22
	4	3535	90	82	457	25
	5	3535	90	101	457	29
	6	4040	100	120	457	35
	8	4040	100	158	457	58
500	2	3020	75	44	507	18.12
	3	3535	90	63	507	24.7
	4	3535	90	82	507	32.92
	5	3535	90	101	507	39.08
	6	4040	100	120	507	48.28
	8	4040	100	158	507	58
560	2	3030	-	-	-	-
	3	3535	90	63	567	30
	4	3535	90	82	567	32.92
	5	4040	100	101	567	39.08
	6	4040	100	120	567	48.28
	8	4545	110	158	567	58
630	2	3020	75	44	637	27.66
	3	3535	90	63	637	37.2
	4	3535	90	82	637	43.62
	5	4040	100	101	637	53.11
	6	4040	100	120	637	61.62
	8	4545	110	158	637	59.86
710	2	3525	75	-	717	24.5
	3	3535	90	63	717	36
	4	3535	90	82	717	41
	5	3535	100	101	717	51
	6	4040	110	114	717	59
	8	4545	110	159	717	78
800	3	3535	90	63	807	52.39
	4	4040	100	82	807	65.8
	5	4040	100	101	807	74.87
	6	4545	110	120	807	89.49
	8	4545	110	158	807	109.62
1000	3	4040	100	63	1007	52.30
	4	4040	100	82	1007	64.60
	5	4545	110	114	1007	81
	6	4545	110	120	1007	95.40
	8	5050	125	158	1007	130
1250	3	4040	100	63	1257	100
	4	4545	110	82	1257	114.50
	5	4545	110	101	1257	150.70
	6	5050	125	120	1257	136

Every effort has been taken to ensure that the data listed in this catalogue is correct.
Finer Power Transmissions P/L will not accept liability for any damage or loss caused as a result of the data in this catalogue.

Pulley (dw)	Grooves	Bush	d2 Max	b	d	App. Kg
150	1	2012/2517	50/65	50	159.6	6
	2	2012	-	-	159.6	-
	3	2517	-	-	159.6	-
	4	2517	-	-	159.6	-
200	1	2517	65	50	209.6	8
	2	2517	65	50	209.6	8
	3	2517	75	85	209.6	10.41
	4	3020	75	110.5	209.6	11.57
	5	3020/3535	75/90	136	209.6	14.38
	6	3535	90	161.5	209.6	16.13
	8	3535	90	212.5	209.6	16.93
212	2	2517	65	44	221.6	9
	3	2517/3020	65/75	85	221.6	11.35
	4	3020	75	110.5	221.6	13.22
	5	3535	90	136	221.6	16.98
	6	3535	90	161.5	221.6	18.85
	8	3535	90	212.5	221.6	22.59
224	1	2517	65	50	233.6	10.00
	2	3020	75	59.5	233.6	10.97
	3	3020	75	85	233.6	12.97
	4	3535	90	110.5	233.6	17.72
	5	3535	90	136	233.6	19.71
	6	3535	90	161.5	233.6	21.71
	8	3535	90	212.5	233.6	25.69
236	1	2517	85.73	45	245.6	-
	2	3020	75	59.5	245.6	11.20
	3	3020	75	85	245.6	14.67
	4	3535	90	110.5	245.6	20.49
	5	3535	90	136	245.6	22.6
	6	3535	90	161.5	245.6	24.72
	8	3535	90	212.5	245.6	28.94
250	1	2517	65	50	259.6	6.90
	2	3020	75	59.5	259.6	14.00
	3	3020	75	85	259.6	16.76
	4	3535	90	110.5	259.6	23.91
	5	3535	90	136	259.6	26.16
	6	3535	90	161.5	259.6	28.42
	8	3535	90	212.5	259.6	32.93
265	3	3535	90	85	274.6	25.04
	4	3535	90	110.5	274.6	21.11
	5	3535	90	136	274.6	23.52
	6	3535	90	161.5	274.6	26.01
	8	3535	90	212.5	274.6	30.91
280	1	2517	65	50	289.6	8.50
	3	3535	90	85	289.6	19.55
	4	3535	90	110.5	289.6	22.23
	5	3535	90	136	289.6	24.91
	6	3535	90	161.5	289.6	27.6
	8	3535	90	212.5	289.6	32.84
300	1	2517	-	-	309.6	-
	2	3020	-	-	309.6	-
	3	3535	90	85	309.6	21.01
	4	3535	90	110.5	309.6	23.95
	5	3535	90	136	309.6	26.89
	6	3535	90	161.5	309.6	29.83
	8	4040	100	212.5	309.6	49.93
	10	4545	110	263.5	309.6	54

Every effort has been taken to ensure that the data listed in this catalogue is correct.
Finer Power Transmissions P/L will not accept liability for any damage or loss caused as a result of the data in this catalogue.

Pulley (dw)	Grooves	Bush	d2 Max	b	d	App. Kg
315	1	2517	-	-	324.6	-
	2	3020	-	-	324.6	-
	3	3535	90	85	324.6	22.04
	4	3535	90	110.5	324.6	25.18
	5	3535	90	136	324.6	28.32
	6	3535	90	161.5	324.6	31.45
	8	4040	100	212.5	324.6	44.28
	10	4545	110	263.5	324.6	60
335	3	3535	90	85	344.6	22.60
	4	3535	90	110.5	344.6	27.60
	5	3535	90	136	344.6	31.11
	6	3535	90	161.5	344.6	34.62
	8	4040	100	212.5	344.6	47.97
	10	4545	110	263.5	344.6	81
	12	5050	125	314.5	344.6	124
355	1	2517	-	-	364.6	-
	2	3020	-	-	364.6	-
	3	3535	90	85	364.6	26.01
	4	3535	90	110.5	364.6	29.44
	5	3535	90	136	364.6	33.23
	6	3535	90	161.5	364.6	37.02
	8	4040	100	212.5	364.6	51.05
	10	4545	110	263.5	364.6	85
	12	5050	125	314.5	364.6	124
375	3	3535	90	85	384.6	25.1
	4	3535	90	110.5	384.6	30.72
	5	3535	90	136	384.6	35.84
	6	4040	100	161.5	384.6	46.39
	8	4545	110	212.5	384.6	59.70
	10	4545	110	263.5	384.6	92
	12	5050	125	314.5	384.6	138
400	3	3535	90	85	409.6	28.14
	4	3535	90	110.5	409.6	33.24
	5	3535	90	136	409.6	38.32
	6	4040	100	161.5	409.6	50.20
	8	4545	110	212.5	409.6	63.87
	10	4545	125	263.5	409.6	73
	12	5050	125	314.5	409.6	156
425	3	3535	90	85	434.6	28.75
	4	3535	90	110.5	434.6	33.76
	5	3535	90	136	434.6	45.51
	6	4040/4545	100/110	161.5	434.6	56.22
	8	4545/5050	110/125	212.5	434.6	64.97
	10	5050	125	263.5	434.6	105
	12	5050	125	314.5	434.6	130
450	3	3535	90	85	459.6	30.39
	4	3535	90	110.5	459.6	35.9
	5	4040	100	136	459.6	47.85
	6	4545	110	161.5	459.6	58.92
	8	5050	125	212.5	459.6	73.99
	10	5050	125	263.5	459.6	94
	12	5050	125	314.5	459.6	133

Every effort has been taken to ensure that the data listed in this catalogue is correct.
Finer Power Transmissions P/L will not accept liability for any damage or loss caused as a result of the data in this catalogue.

Pulley (dw)	Grooves	Bush	d2 Max	b	d	App. Kg
475	3	3535	90	85	484.6	32.46
	4	3535	90	110.5	484.6	38.41
	5	4040	100	136	484.6	50.60
	6	4545	110	161.5	484.6	61.46
	8	5050	125	212.5	484.6	77.64
	10	5050	125	263.5	484.6	125
	12	5050	125	314.5	484.6	142
500	3	3535	90	85	509.6	34.52
	4	3535	90	110.5	509.6	41.06
	5	4040	100	136	509.6	53.49
	6	4545	110	161.5	509.6	64.69
	8	5050	125	212.5	509.6	81.31
	10	5050	125	263.5	509.6	111
	12	5050	125	314.5	509.6	148
530	3	3535	90	85	539.6	36.82
	4	3535/4040	90/100	110.5	539.6	50.27
	5	4040/4545	100/4545	136	539.6	62.18
	6	4545	110	161.5	539.6	73.77
	8	5050	125	212.5	539.6	85.60
	10	5050	125	263.5	539.6	145
	12	5050	125	314.5	539.6	155
560	3	3535	90	85	569.6	39.41
	4	4040	100	110.5	569.6	53.43
	5	4545	110	136	569.6	65.72
	6	5050	125	161.5	569.6	77.67
	8	5050	125	212.5	569.6	90.9
	10	5050	125	263.5	569.6	121
	12	5050	125	314.5	569.6	164
630	3	4040	100	85	639.6	52.10
	4	4545	110	110.5	639.6	66.03
	5	5050	125	136	639.6	79.3
	6	5050	125	161.5	639.6	87.39
	8	5050	125	212.5	639.6	102.88
	10	5050	125	263.5	639.6	130
	12	5050	125	314.5	639.6	185
710	3	4545	110	85	709.6	52
	4	5050	125	110.5	709.6	64
	5	5050	125	136	709.6	79
	6	5050	125	161.5	709.6	100
	8	5050	125	212.5	709.6	121
	10	5050	125	263.5	709.6	165
	12	5050	125	314.5	709.6	165
800	3	4545	110	85	809.6	72
	4	5050	125	110.5	809.6	90.77
	5	5050	125	136	809.6	102.46
	6	5050	125	161.5	809.6	113.65
	8	5050	125	212.5	809.6	136.55
	10	5050	125	263.5	809.6	170
	12	6050	150	314.5	809.6	277

Every effort has been taken to ensure that the data listed in this catalogue is correct.
Finer Power Transmissions P/L will not accept liability for any damage or loss caused as a result of the data in this catalogue.

Pulley (dw)	Grooves	Bush	d2 Max	b	d	App. Kg
1000	4	5050	125	110.5	1009.6	117.11
	5	5050	125	136	1009.6	133.59
	6	5050	125	161.5	1009.6	149.8
	8	5050	125	212.5	1009.6	181.35
	10	5050	125	263.5	1009.6	230
	12	6050	150	314.5	1009.6	346
1250	5	5050	125	136	1259.6	187
	6	5050	125	161.5	1259.6	200
	8	5050	125	212.5	1259.6	252

Every effort has been taken to ensure that the data listed in this catalogue is correct.
Finer Power Transmissions P/L will not accept liability for any damage or loss caused as a result of the data in this catalogue.

Pulley (dw)	Grooves	Bush	d2 Max	b	d	App. Kg
56	1	1008	25	38	54	0.45
	2	1008/1108	25/28	50	54	0.53
60	1	1008	25	16	64	0.25
	2	1108	28	49	64	0.6
63	1	1108	28	16	67	0.3
	2	1108	28	28	67	0.4
	3	1108	28	40	67	0.16
67	1	1108	28	16	71	0.3
	2	1108	28	28	71	0.42
	3	1108	28	40	71	0.57
71	1	1108	28	16	75	0.4
	2	1108	28	28	75	0.5
	3	1108	28	40	75	0.6
75	1	1108	28	16	79	0.5
	2	1210	32	28	79	0.5
	3	1210	32	40	79	0.6
80	1	1210	32	16	84	0.4
	2	1210	32	28	84	0.5
	3	1210	32	40	84	0.7
	4	1210	32	52	84	0.8
85	1	1210	32	16	89	0.5
	2	1610	42	28	89	0.6
	3	1610	42	40	89	0.8
	4	1610	42	52	89	0.9
90	1	1210	32	16	94	0.7
	2	1610	42	28	94	0.8
	3	1610	42	40	94	0.9
	4	1610	42	52	94	1.2
95	1	1210	32	16	99	0.8
	2	1610	42	28	99	0.9
	3	1610	42	40	99	1.06
	4	1610	42	52	99	1.2
100	1	1210	32	16	104	0.9
	2	1610	42	28	104	1
	3	1610	42	40	104	1.2
	4	1610	42	52	104	1.4
106	1	1610	42	16	110	1.1
	2	1610	42	28	110	1.2
	3	1610	42	40	110	1.3
	4	1610	42	52	110	1.7
112	1	1610	42	16	116	1.15
	2	1610	42	28	116	1.3
	3	2012	50	40	116	1.4
	4	2012	50	52	116	1.7
118	1	1610	42	16	122	1.2
	2	1610	42	28	122	1.5
	3	2012	50	40	122	1.6
	4	2012	50	52	122	2
125	1	1610	42	16	129	1.3
	2	1610	42	28	129	1.8
	3	2012	50	40	129	2
	4	2012	50	52	129	2.3

Every effort has been taken to ensure that the data listed in this catalogue is correct.
Finer Power Transmissions P/L will not accept liability for any damage or loss caused as a result of the data in this catalogue.

Pulley (dw)	Grooves	Bush	d2 Max	b	d	App. Kg
132	1	1610	42	16	136	1.5
	2	1610	42	28	136	2
	3	2012	50	40	136	2.4
	4	2012	50	52	136	2.7
140	1	1610	42	16	144	1.6
	2	1610	42	28	144	2.4
	3	2012	50	40	144	2.8
	4	2012	50	52	144	3.1
150	1	1610	42	16	154	2
	2	2012	50	28	154	2.8
	3	2012	50	40	154	3.4
	4	2517	65	52	154	3.8
160	1	1610	42	16	164	1.7
	2	2012	50	28	164	3.3
	3	2012	50	40	164	3.9
	4	2517	65	52	164	4.6
170	1	1610	42	16	174	1.5
	2	2012	50	28	174	2.4
	3	2012	50	40	174	3.7
180	1	1610	42	16	184	2
	2	2012	50	28	184	3
	3	2012	50	40	184	3.6
	4	2517	65	52	184	6.5
200	1	2012	50	16	204	2.7
	2	2012	50	28	204	3.3
	3	2012	50	40	204	4
	4	2517	65	52	204	5.2
224	1	2012	50	16	228	3
	2	2012	50	28	228	3.7
	3	2012	50	40	228	4.4
	4	2517	65	52	228	6
250	1	2012	50	16	254	2.8
	2	2012	50	28	254	4
	3	2012	50	40	254	4.6
	4	2517	65	52	254	7
280	1	2012	50	16	284	3.5
	2	2012	50	28	284	4.4
	3	2517	65	40	284	6.4
	4	2517	65	52	284	7.6
315	1	2012	50	16	319	3.8
	2	2012	50	28	319	5.1
	3	2517	65	40	319	7.4
	4	2517	65	52	319	8.6
355	1	2012	50	16	359	4.5
	2	2012	50	28	359	8.4
	3	2517	65	40	359	8.8
	4	2517	65	52	359	9.4
400	1	2012	50	16	404	4.33
	2	2517	65	28	404	6.9
	3	2517	65	40	404	8.65
	4	2517	65	52	404	10.23

Every effort has been taken to ensure that the data listed in this catalogue is correct.
Finer Power Transmissions P/L will not accept liability for any damage or loss caused as a result of the data in this catalogue.

Pulley (dw)	Grooves	Bush	d2 Max	b	d	App. Kg
482	1	2012	50	16	428	6.7
	2	2517	65	28	428	9.5

Every effort has been taken to ensure that the data listed in this catalogue is correct.
Finer Power Transmissions P/L will not accept liability for any damage or loss caused as a result of the data in this catalogue.

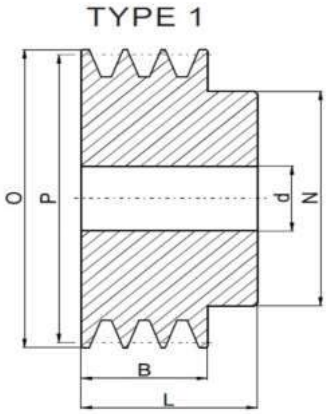

SPA Pilot Bore Pulleys

Pulley (dw)	P	O	Grooves	N	L	B	Type	d	App. Kg
75	75	80.5	1	40	40	20	1	10	0.9
	75	80.5	2	50	45	35	1	10	1.3
85	85	90.5	1	45	40	20	1	10	1.0
	85	90.5	2	50	45	35	1	10	1.3
100	100	100.5	1	45	40	20	1	10	1.4
	100	100.5	2	60	45	35	1	15	2.0
112	112	117.5	1	48	40	20	1	10	1.8
	112	117.5	2	60	45	35	1	15	2.5
125	125	132	1	48	40	20	1	10	2.2
	125	132	2	60	45	35	1	15	3.0

SPB Pilot Bore Pulleys

Pulley (dw)	P	O	Grooves	N	L	B	Type	d	App. Kg
80	80	87	1	50	45	25	1	10	1.2
	80	87	2	50	48	44	1	10	1.7
90	90	97	1	50	45	25	1	10	1.4
	90	97	2	50	49	44	1	10	2.0
100	100	107	1	52	45	25	1	10	1.7
	100	107	2	55	55	44	1	15	2.4
112	112	119	1	55	45	25	1	15	2.0
	112	119	2	60	55	44	1	15	3.0
125	125	132	1	58	45	25	1	15	2.5
	125	132	2	60	55	44	1	15	3.7
150	150	157	1	65	45	25	1	20	3.4
	150	157	2	65	55	44	1	20	4.5

Every effort has been taken to ensure that the data listed in this catalogue is correct.
Finer Power Transmissions P/L will not accept liability for any damage or loss caused as a result of the data in this catalogue.

Finer Power Transmissons stocks a range of Aluminium Pulleys that are manufactured in Australia.
In addition to the below stocked range, Finer Power Transmissions can supply specific bore sizes made to order.

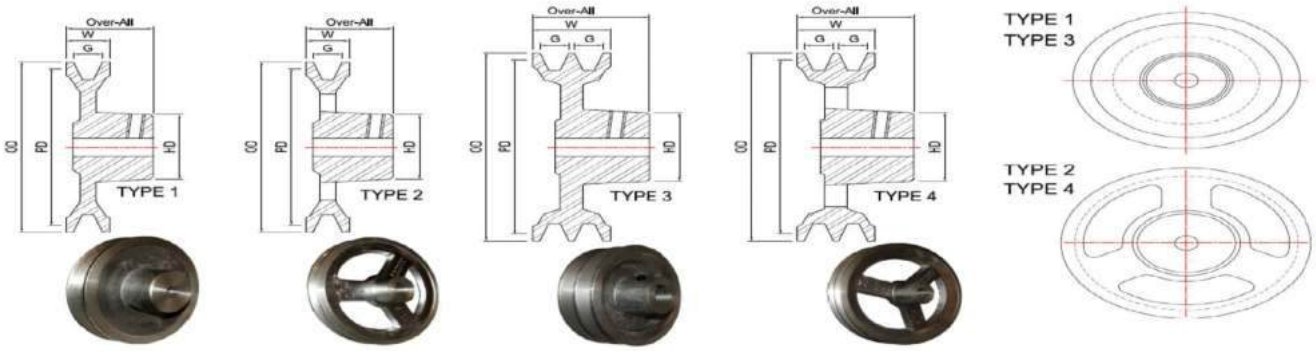

A Section Aluminium Pulleys

PCD		No of Grooves	Type	OD	W	HD	G	Over-All	LTB	Grub Screw	1/2"	5/8"	3/4"	1"
Inches	mm			mm							No Key	3/16" Key	3/16" Key	1/4 " Key
1.25	32	1	1	41	19	35	12.7	38	34	5/16" UNC	√	√	√	
1.5	38	1	1	49	19	35	12.7	38	34	5/16" UNC	√	√	√	
1.75	44	1	1	54	19	39	12.7	38	34	5/16" UNC	√	√	√	
2	50	1	1	61	19	40	12.7	38	34	5/16" UNC	√	√	√	√
		2	3		34	41		55	49	5/16" UNC	√	√	√	√
2.25	57	1	1	67	19	39	12.7	38	33	5/16" UNC	√	√	√	√
2.5	63	1	1	74	19	43	12.7	55	33	5/16" UNC	√	√	√	√
		2	3		34	43		38	48	5/16" UNC	√	√	√	√
2.75	70	1	1	79	19	43	12.7	36	32	5/16" UNC	√	√	√	√
3	76	1	1	86	19	43	12.7	38	35	5/16" UNC	√	√	√	√
		2	3		34	49		55	43	5/16" UNC	√	√	√	√
3.25	82	1	1	92	19	45	12.7	48	35	5/16" UNC	√	√	√	√
3.5	89	1	1	99	19	44	12.7	36	35	5/16" UNC	√	√	√	√
		2	3		34	49		55	43	5/16" UNC	√	√	√	√
4	102	1	1	112	19	46	12.7	48	47	5/16" UNC	√	√	√	√
		2	3		34	46		50	42	5/16" UNC	√	√	√	√
4.5	114	1	1	124	19	47	12.7	38	35	5/16" UNC	√	√	√	√
		2	3		34	48		56	45	5/16" UNC	√	√	√	√
5	127	1	1	137	19	48	12.7	40	37	5/16" UNC	√	√	√	√
		2	3		34	49		51	41	5/16" UNC	√	√	√	√
5.5	140	1	2	150	19	49	12.7	40	36	5/16" UNC	√	√	√	√
		2	3		34	50		54	46	5/16" UNC	√	√	√	√
6	152	1	2	163	19	49	12.7	40	37	5/16" UNC	√	√	√	√
		2	4		34	55		53	44	5/16" UNC	√	√	√	√
6.5	165	1	2	176	19	52	12.7	40	37	5/16" UNC	√	√	√	√
7	178	1	2	189	19	57	12.7	40	38	5/16" UNC	√	√	√	√
		2	4		34	57		53	44	5/16" UNC	√	√	√	√

Table continue next page.

Every effort has been taken to ensure that the data listed in this catalogue is correct.
Finer Power Transmissions P/L will not accept liability for any damage or loss caused as a result of the data in this catalogue.

A Section Aluminium Pulleys

PCD		No of Grooves	Type	OD	W	HD	G	Over-All	LTB	Grub Screw	1/2"	5/8"	3/4"	1"
Inches	mm			mm							No Key	3/16" Key	3/16" Key	1/4 " Key
8	203	1	2	215	20	55	12.7	45	42	5/16" UNC	√	√	√	√
		2	4		34	55		68	47	5/16" UNC	√	√	√	√
9	229	1	2	248	20	55	12.7	44	42	5/16" UNC	√	√	√	√
		2	4		34	55		55	47	5/16" UNC	√	√	√	√
10	254	1	2	265	20	55	12.7	49	47	5/16" UNC	√	√	√	√
		2	4		34	55		59	49	5/16" UNC	√		√	√
12	305	1	2	315	20	58	12.7	48	45	5/16" UNC	√	√	√	√
		2	4		34	55		58	48	5/16" UNC	√		√	√
14	355	1	2	369	21	66	12.7	62	49	5/16" UNC	√	√	√	√
		2	4		34	67		64	55	5/16" UNC	√			
15	381	1	2	393	20	67	12.7	62	60	5/16" UNC	√		√	√
16	406	1	2	420	22	66	12.7	60	59	5/16" UNC	√		√	√
		2	4		35	67		66	56	5/16" UNC	√			
18	457	1	2	471	22	75	12.7	66	63	5/16" UNC	√		√	√
		2	4		35	75		70	60	5/16" UNC	√			

B Section Aluminium Pulleys

PCD		No of Grooves	Type	OD	W	HD	G	Over-All	LTB	Grub Screw	1/2"	5/8"	3/4"	1"
Inches	mm			mm							No Key	3/16" Key	3/16" Key	1/4 " Key
2	50	1	1	63	24	40	16	44	38	5/16" UNC	√	√	√	√
		2	3		44	43		34	59	5/16" UNC	√	√	√	√
2.5	63	1	1	76	24	44	16	43	38	5/16" UNC	√	√	√	√
3	76	1	1	89	24	45	16	42	38	5/16" UNC	√	√	√	√
		2	3		45	50		65	51	5/16" UNC	√	√	√	√
3.5	89	1	1	102	24	50	17	43	35	5/16" UNC	√	√	√	√
		2	3		45	50		66	53	5/16" UNC	√	√	√	√
4	102	1	1	114	24	52	18	43	37	5/16" UNC	√	√	√	√
		2	3		45	70		66	50	5/16" UNC	√	√	√	√
4.5	114	1	1	127	24	52	19	41	36	5/16" UNC	√	√	√	√
		2	3		45	65		66	50	5/16" UNC	√	√	√	√
5	127	1	1	140	24	52	20	42	36	5/16" UNC	√	√	√	√
		2	3		45	60		77	55	5/16" UNC	√	√	√	√
5.5	140	1	1	152	24	53	21	46	40	5/16" UNC	√	√	√	√
		2	3		45	53		66	58	5/16" UNC	√	√	√	√
6	152	1	1	165	24	60	22	45	40	5/16" UNC	√	√	√	√
		2	3		45	58		62	50	5/16" UNC	√	√	√	√
7	178	1	1	190	24	49	23	49	43	5/16" UNC	√	√	√	√
		2	3		45	55		66	51	5/16" UNC	√	√	√	√

Table continue next page.

Every effort has been taken to ensure that the data listed in this catalogue is correct.
Finer Power Transmissions P/L will not accept liability for any damage or loss caused as a result of the data in this catalogue.

B Section Aluminium Pulleys

PCD		No of Grooves	Type	OD	W	HD	G	Over-All	LTB	Grub Screw	1/2"	5/8"	3/4"	1"
Inches	mm			mm							No Key	3/16" Key	3/16" Key	1/4 " Key
8	203	1	1	216	24	60	24	54	47	5/16" UNC	√		√	√
		2	3		45	63		69	55	5/16" UNC	√	√	√	√
9	229	1	2	241	24	53	25	53	47	5/16" UNC	√		√	√
		2	4		45	57		68	53	5/16" UNC	√	√	√	√
10	254	1	2	267	24	56	26	49	44	5/16" UNC	√		√	√
		2	4		45	57		64	51	5/16" UNC	√		√	√
12	305	1	2	318	24	65	27	48	46	5/16" UNC	√		√	√
		2	4		45	64		70	58	5/16" UNC	√	√	√	√
14	355	1	2	368	24	67	28	62	58	5/16" UNC				√
		2	4		45	67		74	69	5/16" UNC				
16	406	1	2	419	24	68	29	58	52	5/16" UNC	√			
		2	4		45	73		75	62	5/16" UNC			√	
18	457	1	2	470	24	67	30	65	64	5/16" UNC				√
		2	4		45	78		71	55	5/16" UNC	√			

Every effort has been taken to ensure that the data listed in this catalogue is correct.
Finer Power Transmissions P/L will not accept liability for any damage or loss caused as a result of the data in this catalogue.

M Section Aluminium Pulleys

PCD		No of Grooves	Type	OD	W	HD	G	Over-All	LTB	Grub Screw	1/2"	5/8"	3/4"	1"
Inches	mm			mm							No Key	3/16" Key	3/16" Key	1/4 " Key
1.5	38	1	1	44	16	34	9	35	34	5/16" UNC	√	-	-	-
1.75	44	1	1	50	16	42	9	35	34	5/16" UNC	√	-	-	-
2	50	1	1	57	16	33	9	30	34	5/16" UNC	√	-	-	-
2.5	63	1	1	69	16	44	9	36	33	5/16" UNC	√	-	-	-
3	76	1	1	82	16	44	9	35	35	5/16" UNC	√	-	-	-

Every effort has been taken to ensure that the data listed in this catalogue is correct.
Finer Power Transmissions P/L will not accept liability for any damage or loss caused as a result of the data in this catalogue.

FINERPOWER TRANSMISSIONS

Idler Pulleys

AETNA | DONDYE

IDLERS PULLEYS

V-Belt Idler Pulleys (High Speed) 2.5.6
High Speed Pulleys - Single Row Bearings 2.5.6
V-Belt Idlers 2.5.6

Flat Flanged Idler Pulleys (High Speed) 2.5.7
High Speed Pulleys - Single Row Bearings 2.5.7
Flat Flanged Idlers 2.5.7
High Speed Pulleys - Double Row Bearings 2.5.8
Flat Flanged Idlers 2.5.8

Flat Face Idler Pulleys (High Speed) 2.5.9
High Speed Pulleys - Double Row Bearings 2.5.9
Flat Face Idlers 2.5.9

V-Belt Idler Pulleys (4 Point Heavy Duty) 2.5.10
4 Point Heavy Duty Pulleys 2.5.10
V-Belt Idlers 2.5.10

Round Belt Idler Pulleys (4 Point Heavy Duty) 2.5.11
Round Belt Idlers 2.5.11

Flat Face Idler Pulleys (4 Point Heavy Duty) 2.5.12
4 Point Heavy Duty Pulleys 2.5.12
Flat Face Idlers 2.5.12

Flat Single Flange Idler Pulleys (4 Point Heavy Duty) 2.5.13
Flat Single Flange Idlers 2.5.13

Flat Flanged Idler Pulleys (4 Point Heavy Duty) 2.5.14
Flat Flanged Idlers 2.5.14

Tyre Idler Pulleys 2.5.15
Tyre Idlers 2.5.15

V-Belt Idler Pulleys (Single Row Bearing) 2.5.16
Single Row Bearing Idler Pulleys 2.5.16
V-Belt Idlers 2.5.16
V-Belt Idlers Cont. 2.5.17

Flat Flanged Idler Pulleys (Single Row Bearing) 2.5.18
Single Row Bearing Idler Pulleys 2.5.18
Flat Flanged Idlers 2.5.18
Flat Flanged Idlers Cont. 2.5.19

V-Belt Idler Pulleys (Double Row Bearing) 2.5.20
Double Row Bearing Idler Pulleys 2.5.20
V-Belt Idlers 2.5.20

Flat Flanged Idler Pulleys (Double Row Bearing) 2.5.21
Double Row Bearing Idler Pulleys 2.5.21
Flat Flanged Idlers 2.5.21

Flat Faced Idler Pulleys (Double Row Bearing) 2.5.22
Double Row Bearing Idler Pulleys 2.5.22
Flat Faced Idlers 2.5.22
Flat Face Idlers Cont. 2.5.23

Part Number Index - Aetna 2.5.24
Part Number Index - Don Dye 2.5.25

Every effort has been taken to ensure that the data listed in this catalogue is correct.
Finer Power Transmissions P/L will not accept liability for any damage or loss caused as a result of the data in this catalogue.

High Speed Pulleys - Single Row Bearings

They are used in heavy duty applications where loads and speeds are greater than required for unground bearings-usually over 2000 RPM. Many are used on modern combines and hay baling equipment. Aetna V-belt idlers are available with single row bearings with a bore size to clear 1/2 and 5/8 bolts. Aetna belt idlers are generally used as tensioners or direction changers. Permanently lubricated and sealed against grime and dirt. Fit into existing design with little or no engineering changes or are readily adapted to new designs.

ADVANTAGES

Heavy gauge precision formed steel with double row of steel rivets with strengthening rib
Precision bearing for high capacity, lubricated and sealed for life
Solid steel bushing to provide proper mounting clearance "Weep" holes to prevent water build-up
Basic radial load rating of precision bearing is 1,820 pounds

V-Belt Idlers

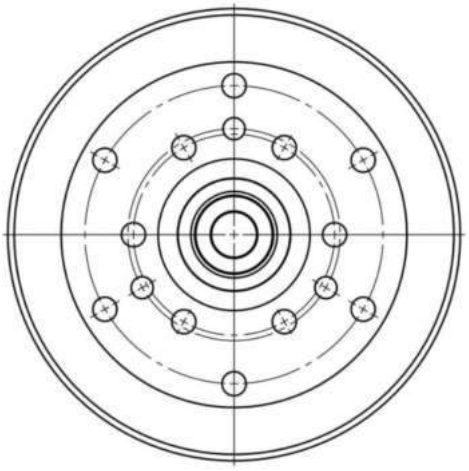

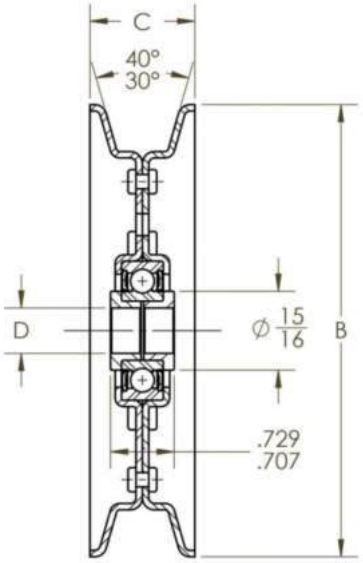

PART NO.	UNIT	BELT SIZE	B	C	D
B13516-A	Inch	B	4-3/8	1	.510/.515
	mm		111.125	25.4	12.954/13.081
B13516-B	Inch	B	4-3/8	1	.635/.640
	mm		111.125	25.4	16.129/16.256
C15919-B9**	Inch	C	7-5/16	1-3/16	.635/.640
	mm		185.737	40.037	16.129/16.256

***Zinc Plated Yellow Hexavalent Chromium Finish*

Every effort has been taken to ensure that the data listed in this catalogue is correct.
Finer Power Transmissions P/L will not accept liability for any damage or loss caused as a result of the data in this catalogue.

High Speed Pulleys - Single Row Bearings

They are used in heavy duty applications where loads and speeds are greater than required for unground bearings-usually over 2000 RPM. Many are used on modern combines and hay baling equipment. Aetna V-belt idlers are available with single row bearings with a bore size to clear 1/2 and 5/8 bolts. Aetna belt idlers are generally used as tensioners or direction changers. Permanently lubricated and sealed against grime and dirt. Fit into existing design with little or no engineering changes or are readily adapted to new designs.

ADVANTAGES

Heavy gauge precision formed steel with double row of steel rivets with strengthening rib
Precision bearing for high capacity, lubricated and sealed for life
Solid steel bushing to provide proper mounting clearance
"Weep" holes to prevent water build-up
Basic radial load rating of precision bearing is 1,820 pounds

Flat Flanged Idlers

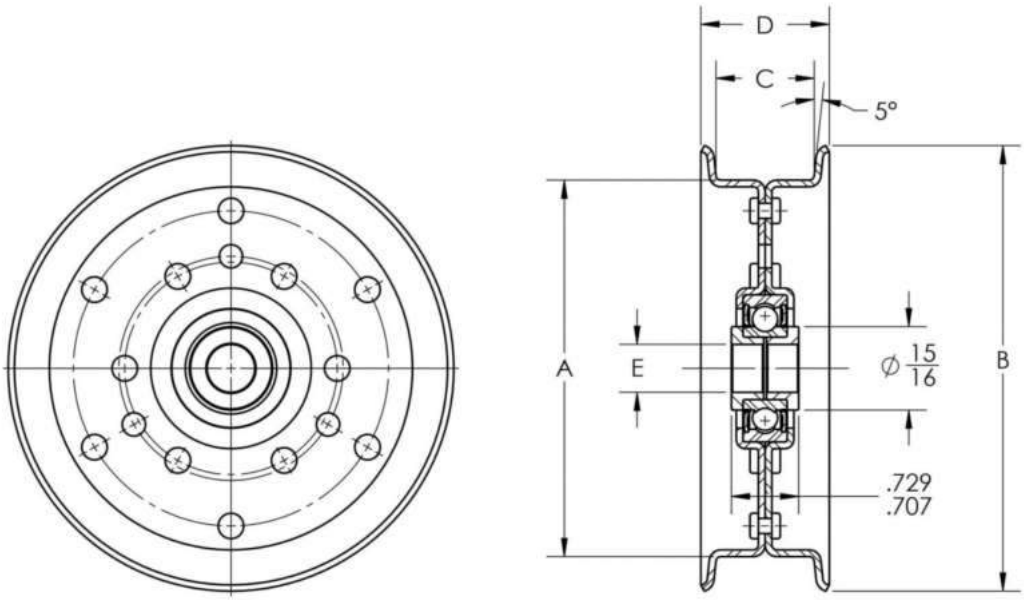

PART NO.	UNIT	A	B	C	D	E
F14026-B	Inch	5	5-3/4	1-5/8	2-1/16	.635/.640
	mm	127	146.06	41.275	52.387	16.129/16.256
F14416-A	Inch	5-1/2	6-1/4	1	1-7/16	.510/.515
	mm	139.7	158.75	25.4	36.512	12.954/13.081
F14416-B	Inch	5-1/2	6-1/4	1	1-7/16	.635/.640
	mm	139.7	158.75	25.4	36.512	16.129/16.256
F16416-B	Inch	8	9	1	1-7/16	.635/.640
	mm	203.2	228.6	25.4	36.512	16.129/16.256
F16424-B6*	Inch	8	9	1-1/2	1-15/16	.635/.640
	mm	203.2	228.6	38.1	49.212	16.129/16.256

Every effort has been taken to ensure that the data listed in this catalogue is correct.
Finer Power Transmissions P/L will not accept liability for any damage or loss caused as a result of the data in this catalogue.

High Speed Pulleys - Double Row Bearings

They are used in heavy duty applications where loads and speeds are greater than required for unground bearings-usually over 2000 RPM. Many are used on modern combines. Aetna straight belt idlers for flat belts are available with double row bearings and bushed to clear 1/2 , 5/8 and 3/4 bolts. Aetna belt idlers are generally used as tensioners or direction changers. Permanently lubricated and sealed against grime and dirt. Fit into existing design with little or no engineering changes or are readily adapted to new designs.

ADVANTAGES

Heavy gauge precision formed steel with annular strengthening rib.
Double row of steel rivets
Double row lubricated for life sealed precision angular contact bearing for higher capacity and rigidity
Steel bushing to provide proper bolt clamping and centering
Basic radial load rating of precision bearing is 3,340 pounds

Flat Flanged Idlers

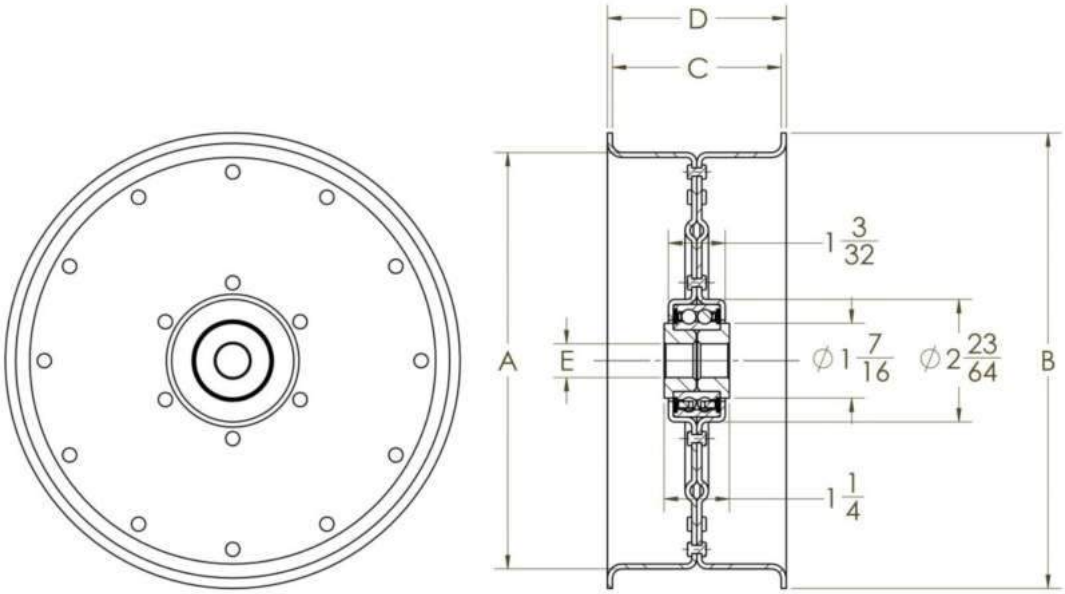

PART NO.	UNIT	A	B	C	D	E
F26448-B6**	Inch	8	8-3/4	3	3-3/16	.643/.649
	mm	203.2	222.25	76.2	80.962	16.332/16.484
F26452-B9**	Inch	8	8-3/4	3-1/4	3-7/16	.643/.649
	mm	203.2	222.25	82.55	87.312	16.332/16.484

***Zinc Plated Yellow Hexavalent Chromium Finish*

Every effort has been taken to ensure that the data listed in this catalogue is correct.
Finer Power Transmissions P/L will not accept liability for any damage or loss caused as a result of the data in this catalogue.

High Speed Pulleys - Double Row Bearings

They are used in heavy duty applications where loads and speeds are greater than required for unground bearings-usually over 2000 RPM. Many are used on modern combines. Aetna straight belt idlers for flat belts are available with double row bearings and bushed to clear 1/2 , 5/8 and 3/4 bolts. Aetna belt idlers are generally used as tensioners or direction changers. Permanently lubricated and sealed against grime and dirt. Fit into existing design with little or no engineering changes or are readily adapted to new designs.

ADVANTAGES

Heavy gauge precision formed steel with annular strengthening rib. Double row of steel rivets
Double row lubricated for life sealed precision angular contact bearing for higher capacity and rigidity
Steel bushing to provide proper bolt clamping and centering
Basic radial load rating of precision bearing is 3,340 pounds

Flat Face Idlers

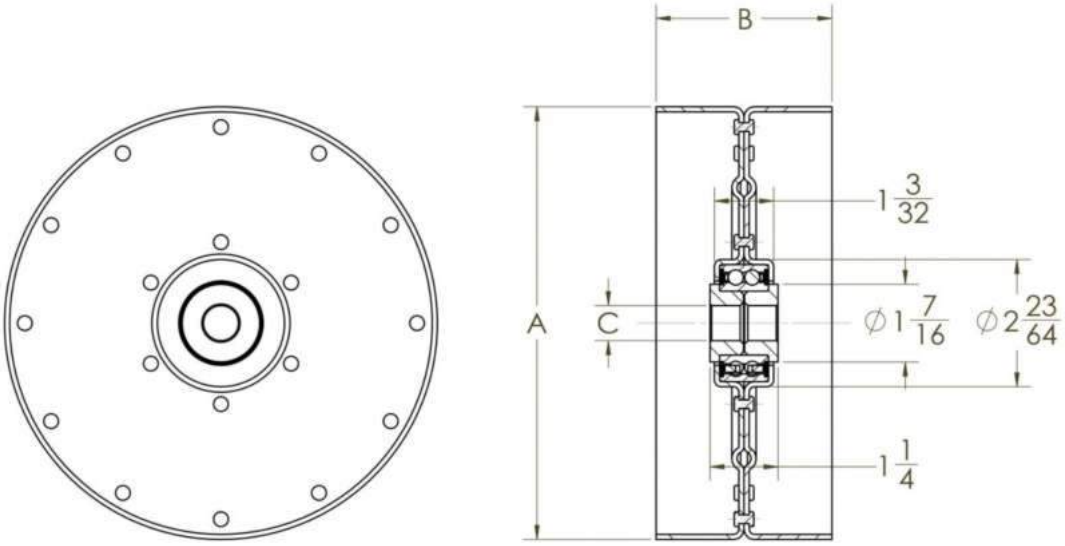

PART NO.	UNIT	A	B	C
S24032-A	Inch	5	2	.516/.522
	mm	127	50.8	13.0164/13.2588
S24032-B	Inch	5	2	.643/.649
	mm	127	50.8	16.3322/16.4846
S25252-A	Inch	6-1/2	3-1/4	.516/.522
	mm	165.1	82.55	13.0164/13.2588
S25252-C	Inch	6-1/2	3-1/4	.769/.775
	mm	165.1	82.55	19.5326/19.685
S26452-B6**	Inch	8	3-1/4	.643/.649
	mm	203.2	82.55	16.3322/16.4846
S28052-B	Inch	10	3-1/4	.643/.649
	mm	254	82.55	16.3322/16.4846

***Zinc Plated Yellow Hexavalent Chromium Finish*

Every effort has been taken to ensure that the data listed in this catalogue is correct.
Finer Power Transmissions P/L will not accept liability for any damage or loss caused as a result of the data in this catalogue.

4 Point Heavy Duty Pulleys

Provide long life under demanding conditions. They are installed with standard 1/2 or 5/8 bolts. Applications include agricultural, power transmission equipment, and conveyor systems. Aetna V-belt idlers are generally used as tensioners or direction changers. Permanently lubricated and sealed against grime and dirt. Fit into existing designs with little or no engineering changes, or are readily adapted to new designs.

ADVANTAGES

Over-size, factory packed lubricant chamber assures maximum life and operating efficiency without troublesome relubrication
Case hardened to resist belt abrasion
Available for most common V-belt sizes
Bearing races are hardened to resist wear, outers and inners are accurately formed for smooth running
Aetna's self-contouring, free-running, self-wiping seal provides positive contact under all conditions of misalignment
Full ball complement for high durability

V-Belt Idlers

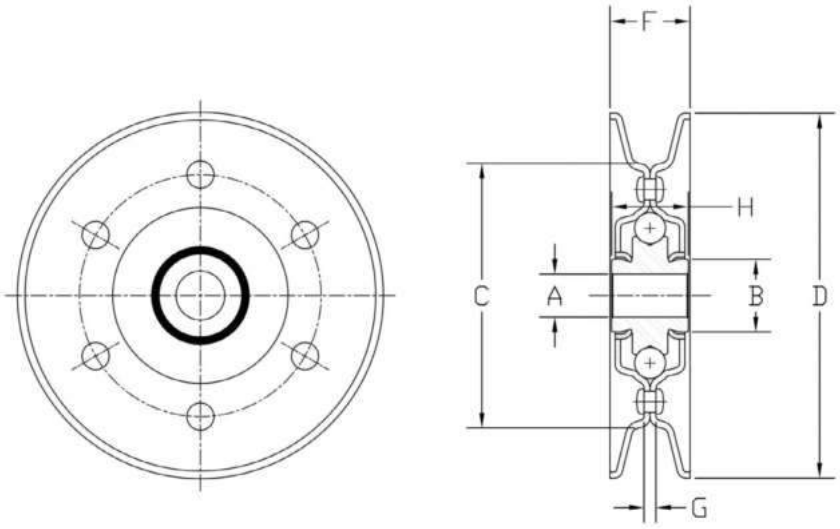

PART NO.	UNIT	A	B	C	D	BELT SIZE	F	G	H	WEIGHT (LBS / kg)
AG2321	Inch	.643/.649	1-3/16	2-1/4	3-1/4	A	7/8	.144	.750	.75
	mm	16.332/16.484	30.162	57.15	82.55		22.225	3.657	19.05	.340
AG2321-A	Inch	.516/.522	1-3/16	2-1/4	3-1/4	A	7/8	.144	.750	.78
	mm	13.016/13.258	30.162	57.15	82.55		22.225	3.657	19.05	.359
AG2421	Inch	.643/.649	7/8	3-7/32	4-13/32	B	31/32	.144	.927	.98
	mm	16.332/16.484	22.225	81.756	111.918		24.606	3.657	23.545	.444
AG2421-A	Inch	.516/.522	7/8	3-7/32	4-13/32	B	31/32	.144	.927	1.01
	mm	13.016/13.258	22.225	81.756	111.918		24.606	3.657	23.545	.458
AG2621	Inch	.643/.649	7/8	3-13/16	5-3/4	A, B,and C	1-5/32	.190	.927	1.52
	mm	16.332/16.484	22.225	96.837	146.05		29.368	4.826	23.545	0.694
AG2621-A	Inch	.516/.522	7/8	3-13/16	5-3/4	A, B,and C	1-5/32	.190	.927	1.55
	mm	13.016/13.258	22.225	96.837	146.05		29.368	4.826	23.545	0.703
AG2721	Inch	.643/.649	7/8	5-7/32	7	B and C	1-5/32	.190	.927	2.00
	mm	16.332/16.484	22.225	132.556	177.8		29.368	4.826	23.545	0.907

Every effort has been taken to ensure that the data listed in this catalogue is correct.
Finer Power Transmissions P/L will not accept liability for any damage or loss caused as a result of the data in this catalogue.

4 Point Heavy Duty Pulleys

Provide long life under demanding conditions. They are installed with standard 1/2 or 5/8 bolts. Applications include agricultural, power transmission and material handling equipment. Aetna round belt idlers are generally used as tensioners or direction changers. Permanently lubricated and sealed against grime and dirt. Fit into existing designs with little or no engineering changes, or are readily adapted to new designs.

ADVANTAGES

Over-size, factory packed lubricant chamber assures maximum life and operating efficiency without troublesome relubrication
Case hardened to resist belt abrasion
Bearing races are hardened to resist wear, outers and inners are accurately formed for smooth running
Aetna's self-contouring, free-running, self-wiping seal provides positive contact under all conditions of misalignment

Round Belt Idlers

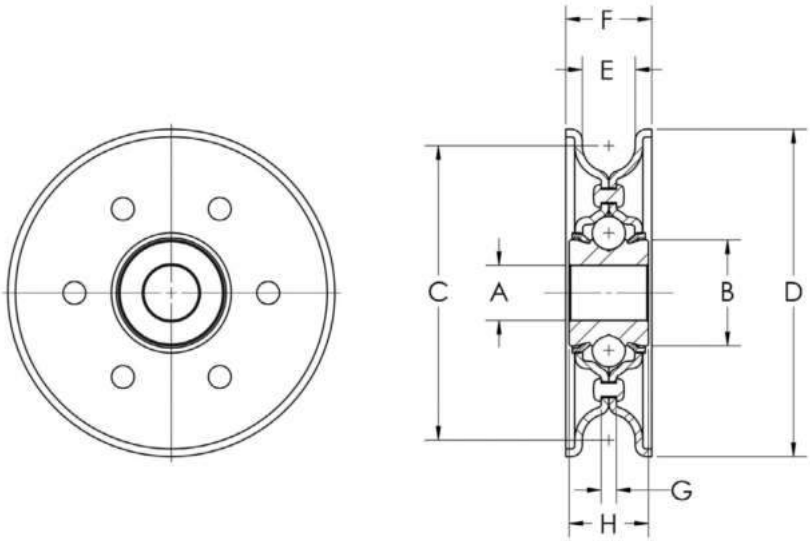

PART NO.	UNIT	A	B	C	D	BELT DIA	F	G	H	WEIGHT (LBS / kg)
AG2331	Inch	.643/.649	1-3/16	3" Belt	3-1/4	15/32	13/16	.144	.750	.70
	mm	16.332/16.484	30.162	76.2 belt	82.55	11.906	20.637	3.657	19.05	.317
AG2331-A	Inch	.516/.522	1-3/16	3" Belt	3-1/4	15/32	13/16	.144	.750	.73
	mm	13.016/13.258	30.162	76.2 belt	82.55	11.906	20.637	3.657	19.05	.331

Every effort has been taken to ensure that the data listed in this catalogue is correct.
Finer Power Transmissions P/L will not accept liability for any damage or loss caused as a result of the data in this catalogue.

4 Point Heavy Duty Pulleys

Provide long life under demanding conditions. They are installed with standard 1/2 or 5/8 bolts. Applications include agricultural, power transmission equipment, and conveyor systems. Aetna belt idlers are generally used as tensioners or direction changers. Permanently lubricated and sealed against grime and dirt. Fit into existing designs with little or no engineering changes, or are readily adapted to new designs.

ADVANTAGES

Over-size, factory packed lubricant chamber assures maximum life and operating efficiency without troublesome relubrication
Case hardened to resist belt abrasion
Available for most common belt sizes
Bearing races are hardened to resist wear, outers and inners are accurately formed for smooth running
Aetna's self-contouring, free-running, self-wiping seal provides positive contact under all conditions of misalignment
Full ball complement for high durability

Flat Face Idlers

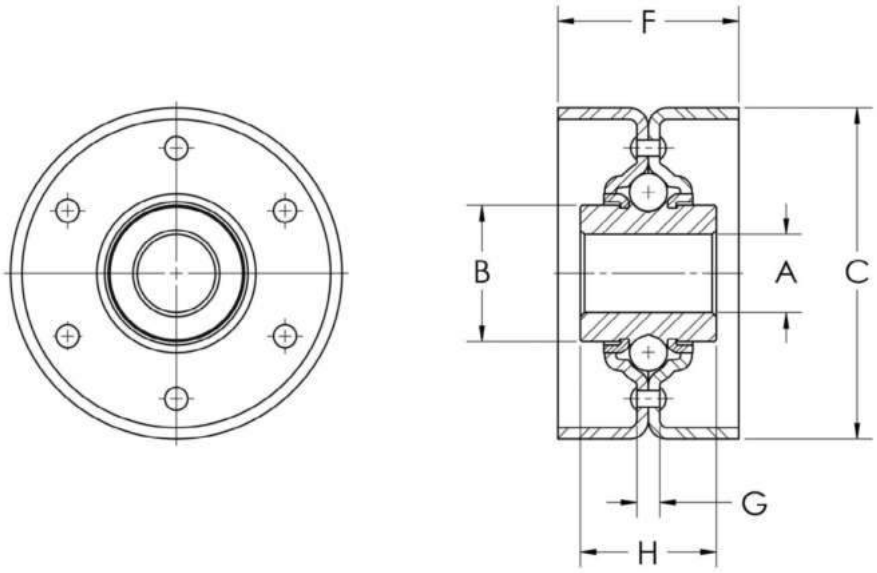

PART NO.	UNIT	A	B	C	F	G	H	WEIGHT (LBS / kg)
AG2367-A	Inch	.516/.522	1-3/16	2-3/4	1-1/2	1.90	1.125	.83
	mm	13.106/13.258	30.1625	69.85	38.1	48.26	28.575	.376

Every effort has been taken to ensure that the data listed in this catalogue is correct.
Finer Power Transmissions P/L will not accept liability for any damage or loss caused as a result of the data in this catalogue.

4 Point Heavy Duty Pulleys

Provide long life under demanding conditions. They are installed with standard 1/2 or 5/8 bolts. Applications include agricultural, power transmission equipment, and conveyor systems. Aetna V-belt idlers are generally used as tensioners or direction changers. Permanently lubricated and sealed against grime and dirt. Fit into existing designs with little or no engineering changes, or are readily adapted to new designs.

ADVANTAGES

Over-size, factory packed lubricant chamber assures maximum life and operating efficiency without troublesome relubrication
Case hardened to resist belt abrasion
Available for most common V-belt sizes
Bearing races are hardened to resist wear, outers and inners are accurately formed for smooth running
Aetna's self-contouring, free-running, self-wiping seal provides positive contact under all conditions of misalignment
Full ball complement for high durability

Flat Single Flange Idlers

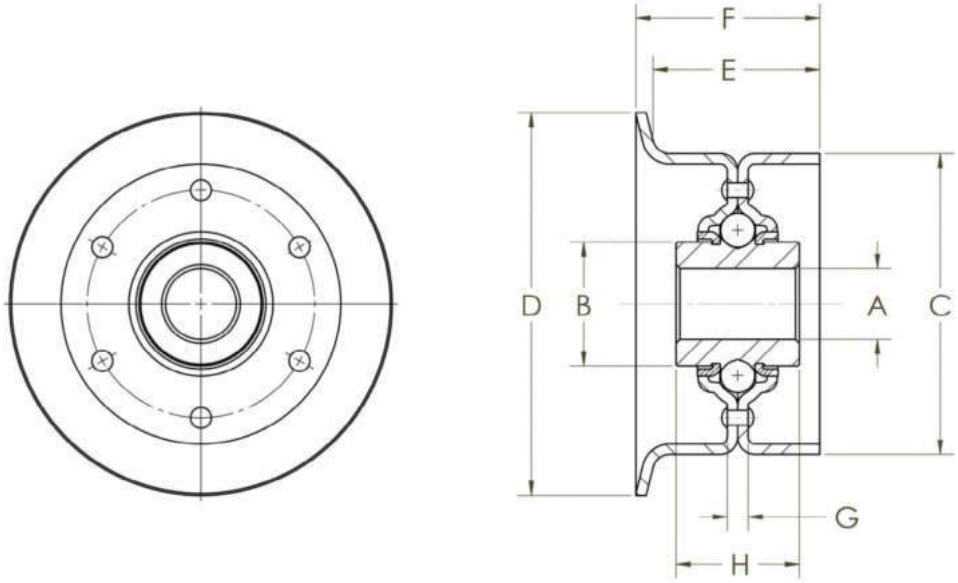

PART NO.	UNIT	A	B	C	D	E	F	G	H	WEIGHT (LBS)
AG2365-1AM*	Inch	.516/.522	1-3/16	2-3/4	3-1/2	1-1/2	1-11/16	.190	1.125	1.03
	mm	13.106/13.258	30.162	69.85	88.9	38.1	42.862	4.826	28.575	0.467
AG2365-A	Inch	.516/.522	1-3/16	2-3/4	3-1/2	1-1/2	1-11/16	.190	1.125	1.03
	mm	13.106/13.258	30.162	69.85	88.9	38.1	42.862	4.826	28.575	0.467

**Includes Felt & Slinger Seals*

Every effort has been taken to ensure that the data listed in this catalogue is correct.
Finer Power Transmissions P/L will not accept liability for any damage or loss caused as a result of the data in this catalogue.

Flat Flanged Idlers

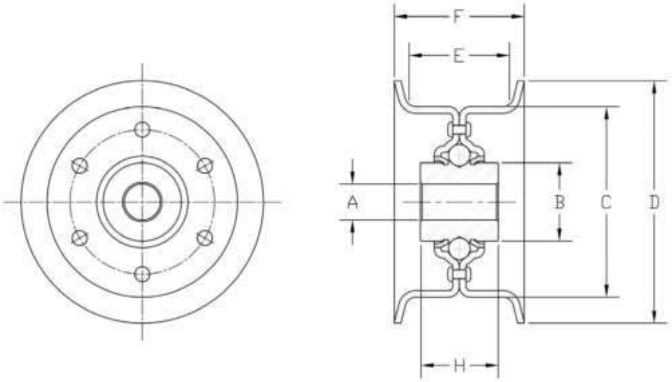

PART NO.	UNIT	A	B	C	D	E	F	G	H	WEIGHT (LBS / kg)
AG2352	Inch	.643/.649	1-3/16	2-7/8	3-1/4	11/16	27/32	.144	.750	.70
	mm	16.332/16.484	30.162	73.025	82.55	17.462	21.431	3.657	19.05	.317
AG2352-A	Inch	.516/.522	1-3/16	2-7/8	3-1/4	11/16	27/32	.144	.750	.73
	mm	13.106/13.258	46.037	73.025	82.55	17.462	24.431	3.657	19.05	.331
AG2354-AS	Inch	.516/.522	15/16	2-3/4	3-7/16	1	1-13/32	.144	1.125	.68
	mm	13.106/13.258	23.812	69.85	87.312	25.4	35.718	3.657	28.575	.308
AG2354-FK	Inch	.516/.522	15/16	2-3/4	3-7/16	1	1-13/32	.144	.927	.61
	mm	13.106/13.258	23.812	69.85	87.312	25.4	35.718	3.657	23.545	.276
AG2362-A*	Inch	.516/.522	1-3/16	2-3/4	3-1/2	1-1/2	1-7/8	.190	1.125	1.51
	mm	13.106/13.258	46.037	69.85	88.9	38.1	47.625	4.826	28.575	.684
AG2362-S*	Inch	.643/.649	1-3/16	2-3/4	3-1/2	1-1/2	1-7/8	.190	1.125	1.44
	mm	16.332/16.484	46.037	69.85	88.9	38.1	47.625	4.826	28.575	.653
AG2366-AS	Inch	.516/.522	1-1/8	2-7/8	3-1/4	11/16	27/32	.144	1.125	.75
	mm	13.106/13.258	28.575	73.025	82.55	17.462	21.431	3.657	28.575	.340
AG2413	Inch	.643/.649	7/8	4	4-29/64	1-1/8	1-3/8	.144	.927	1.25
	mm	16.332/16.484	22.225	101.6	113.109	28.575	34.925	3.657	23.545	.566
AG2413-A	Inch	.516/.522	7/8	4	4-29/64	1-1/8	1-3/8	.144	.927	1.28
	mm	13.106/13.258	22.225	101.6	113.109	28.575	34.925	3.657	23.545	.580
AG2452	Inch	.643/.649	7/8	4-1/4	4-5/8	3/4	1-1/32	.144	.927	1.21
	mm	16.332/16.484	22.225	107.95	117.475	19.05	26.193	3.657	23.545	0.548
AG2452-A	Inch	.516/.522	7/8	4-1/4	4-5/8	3/4	1-1/32	.144	.927	1.24
	mm	13.106/13.258	22.225	107.95	117.475	19.05	26.193	3.657	23.545	0.562
AG2613	Inch	.643/.649	7/8	6	7	1	1-3/8	.144	.927	2.00
	mm	16.332/16.484	22.225	152.4	177.8	25.4	34.925	3.657	23.545	0.907
AG2613-13**	Inch	.643/.649	7/8	6	7	1	1	.144	.927	2.03
	mm	16.332/16.484	22.225	152.4	177.8	25.4	25.4	3.657	23.545	.920
AG2613-A	Inch	.516/.522	7/8	6	7	1	1-3/8	.144	.927	2.03
	mm	13.106/13.258	22.225	152.4	177.8	25.4	34.925	3.657	23.545	.920
AG2814	Inch	.643/.649	7/8	8	8-3/4	1-1/8	1-19/32	.144	.927	3.38
	mm	16.332/16.484	22.225	203.2	222.25	28.575	40.481	3.657	23.545	1.553

**Extra Heavy Gauge Steel*

***Zinc Plated with Oil Dip*

Every effort has been taken to ensure that the data listed in this catalogue is correct.
Finer Power Transmissions P/L will not accept liability for any damage or loss caused as a result of the data in this catalogue.

Tyre Idlers

Aetna rubber tire idlers share the same design advantages as standard Aetna idlers and are furnished with a SBR or EPDM rubber tires. They provide long life under demanding conditions and are installed with standard 1/2 or 5/8 bolts. Typically used in luggage handling carousels, belt conveyor systems and agricultural planters. They can be used as non-destructive belt tighteners to reduce wear on soft drive belts.

ADVANTAGES

Over-size, factory packed lubricant chamber assures maximum life and operating efficiency without troublesome relubrication

Bearing races are hardened to resist wear, outers and inners are accurately formed for smooth running

Aetna's self-contouring, free-running, self-wiping seal provides positive contact under all conditions of misalignment

Full ball complement for high durability

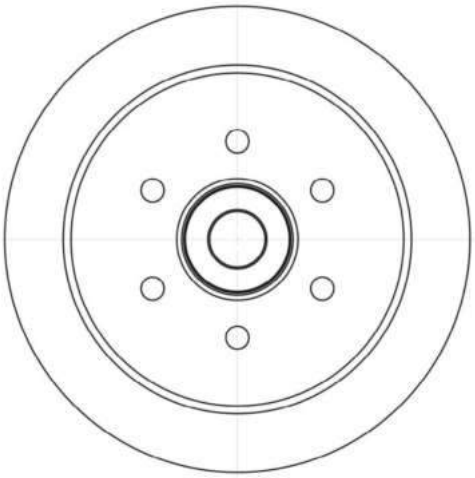

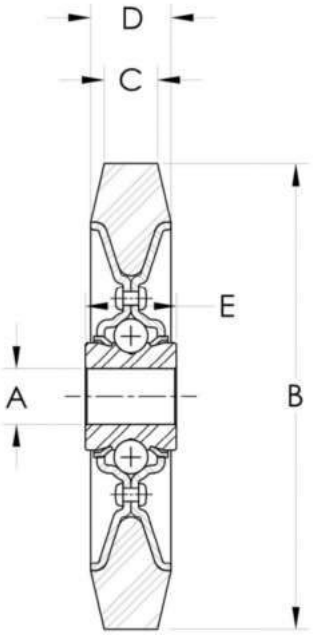

PART NO.	UNIT	BORE (A)	TYRE OD (B)	TYRE WIDTH (C)	OUTER WIDTH (D)	INNER WIDER (E)	WEIGHT (LBS / kg)
AG2341-ALS	Inch	.630/.636	4-1/4	19/32	7/8	13/16	.74
	mm	16.002/16.154	107.95	15.081	22.225	20.637	.335
AG2341-ALE	Inch	.630/.636	4-1/4	19/32	7/8	13/16	.74
	mm	16.002/16.154	107.95	15.081	22.225	20.637	.335
AG2342-A2T	Inch	.516/.522	4-1/4	19/32	7/8	13/16	.80
	mm	13.106/14.020	107.95	15.081	22.225	20.637	.362

Every effort has been taken to ensure that the data listed in this catalogue is correct.
Finer Power Transmissions P/L will not accept liability for any damage or loss caused as a result of the data in this catalogue.

Single Row Bearing Idler Pulleys

Don Dye pressed steel pulleys are designed to make a complete, economical, self contained unit for either flat or "V" side of belt. They are furnished with a single-row, radial-type, highest quality precision ground, pre-lubricated ball bearing (made of 52100 bearing steel) with contact-type seals to insure positive retention of lubricant and full protection against dirt, dust or foreign matter. These bearings contain a 60% fill of high temperature grease, no re-lubrication required. The ball bearing inner ring is extended on both sides to provide clearance for abutting parts and greater support on the shaft. A compression ring (USA Patent No. 4518372) is compressed between the center O.D. of bearing and center I.D. of pulley bearing pocket to assure a firm reliable fit of pulleys to bearing. This helps distribute loads from the pulley more evenly to the outer bearing race resulting in minimum distortion of bearing O.D. Our tests have proven this method of bearing installation to give longer and more reliable bearing life. With little or no alterations, these belt pulleys can be adapted to new designs or to existing machine.

V-Belt Idlers

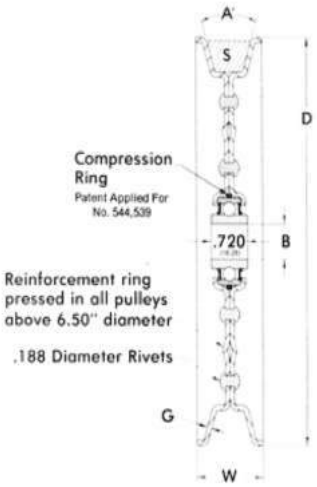

APPLICATIONS FOR IDLER PULLEYS

Accurately bore sized for easy, quick mounting on standard 1/2" or 5/8" bolts (1/2" bore removable sleeve std. in all pulleys) 3/8" sleeve is available if requested.
Pulleys are riveted for strength and durability- No spot welding is used.
Feature smoothly rolled out edges which eliminate belt chafing and scuffing
"Weep Holes" on the rivet circle allow water drainage when the pulley is mounted in a horizontal position.
Zinc Plated

PART NO.	UNIT	INC. ANGLE (A)	BORE (B)	OUTSIDE DIAMETER (D)	PULLEY WIDTH (W)	BELT SIZE	ROWS OF RIVETS	NO. OF RIVETS	GA. MAT. (G)	WEIGHT (LBS / kg)
AVI-40	Inch	32	Fitted with 1/2" Removable Reduction Bush - 3/8" Bush Available	2.5	0.63	A	1	6	14	0.46
	mm			63.5	16.00					0.20
56RG-54	Inch	34		3.50	0.86	A	1	6	14	0.66
	mm			88.9	21.84					0.30
AVI-56	Inch	34		3.50	0.86	A	1	6	14	0.66
	mm			88.9	21.84					0.30
AVI-64	Inch	34		4.00	0.84	A	1	6	14	0.77
	mm			101.60	21.33					0.35
BVI-60	Inch	34		3.75	0.96	B	1	6	14	0.69
	mm			95.25	24.38					0.31
BVI-70	Inch	32		4.37	1.00	B	1	6	14	0.88
	mm			110.99	25.40					0.40
ABVI-80*	Inch	34		5.00	1.00	A,B	1	6	14	1.12
	mm			127.00	25.40					0.51

Also available trimmed one side in plain steel (Part No. TABVI-80PLAIN)

Every effort has been taken to ensure that the data listed in this catalogue is correct.
Finer Power Transmissions P/L will not accept liability for any damage or loss caused as a result of the data in this catalogue.

Single Row Bearing Idler Pulleys

V-Belt Idlers Cont.

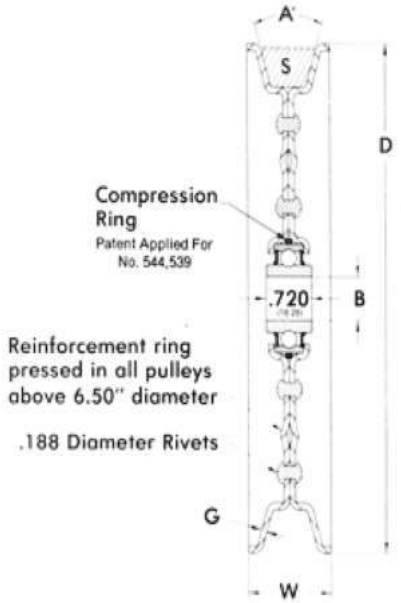

PART NO.	UNIT	INC. ANGLE (A)	BORE (B)	OUTSIDE DIAMETER (D)	PULLEY WIDTH (W)	BELT SIZE	ROWS OF RIVETS	NO. OF RIVETS	GA. MAT. (G)	WEIGHT (LBS / kg)
BVI-80	Inch	32	Fitted with 1/2" Removable Reduction Bush - 3/8" Bush Available	5.00	1.00	B	2	18	14	1.12
	mm			127.00	25.40					0.51
BCVI-81	Inch	32		5.06	1.31	B,C	1	6	14	1.12
	mm			128.59	33.27					0.51
CVI-84	Inch	32		5.25	1.31	C	2	18	14	1.23
	mm			133.35	33.27	C	2	18	14	0.56
BVI-100	Inch	32		6.25	1.00	B	2	18	14	1.62
	mm			158.75	25.40					0.73
CVI-100	Inch	32		6.25	1.31	C	2	18	14	1.68
	mm			158.75	33.72					0.76
BVI-108	Inch	32		6.75	1.00	B	2	18	14	1.82
	mm			171.45	25.40					0.83
BCVI-117	Inch	32		7.31	1.31	B,C	2	18	14	2.14
	mm			185.67	33.27					0.97
CVI-117	Inch	32		7.31	1.31	C	2	18	14	2.11
	mm			185.67	33.27					0.91
5VI-128	Inch	38		8.047	1.06	5V	2	18	14	2.25
	mm			204.39	26.97					1.02
5VI-137	Inch	38		8.56	1.12	5V	2	18	14	2.56
	mm			217.42	28.44					1.16
CVI-144	Inch	32		9.00	1.31	C	2	18	14	3.05
	mm			228.60	33.27					1.38
5VI-152	Inch	38		9.50	1.12	5V	2	18	14	3.26
	mm			241.30	28.44					1.48

Every effort has been taken to ensure that the data listed in this catalogue is correct.
Finer Power Transmissions P/L will not accept liability for any damage or loss caused as a result of the data in this catalogue.

Single Row Bearing Idler Pulleys

Don Dye pressed steel pulleys are designed to make a complete, economical, self contained unit for either flat or "V" side of belt. They are furnished with a single-row, radial-type, highest quality precision ground, pre-lubricated ball bearing (made of 52100 bearing steel) with contact-type seals to insure positive retention of lubricant and full protection against dirt, dust or foreign matter. These bearings contain a 60% fill of high temperature grease, no re-lubrication required. The ball bearing inner ring is extended on both sides to provide clearance for abutting parts and greater support on the shaft. A compression ring (USA Patent No. 4518372) is compressed between the center O.D. of bearing and center I.D. of pulley bearing pocket to assure a firm reliable fit of pulleys to bearing. This helps distribute loads from the pulley more evenly to the outer bearing race resulting in minimum distortion of bearing O.D. Our tests have proven this method of bearing installation to give longer and more reliable bearing life. With little or no alterations, these belt pulleys can be adapted to new designs or to existing machine.

Flat Flanged Idlers

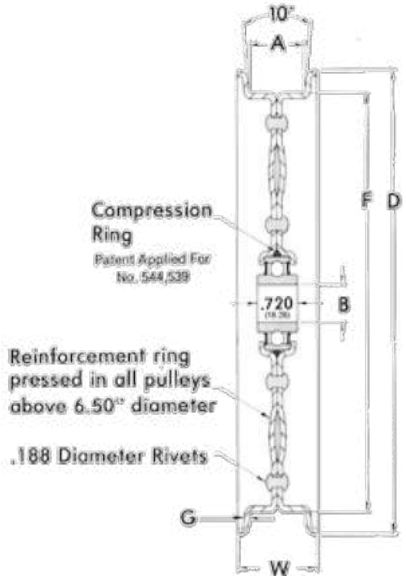

APPLICATIONS FOR IDLER PULLEYS

Accurately bore sized for easy, quick mounting on standard 1/2" or 5/8" bolts (1/2" bore removable sleeve std. in all pulleys) 3/8" sleeve is available if requested.
Pulleys are riveted for strength and durability- No spot welding is used.
Feature smoothly rolled out edges which eliminate belt chafing and scuffing
"Weep Holes" on the rivet circle allow water drainage when the pulley is mounted in a horizontal position.
Zinc Plated

PART NO.	UNIT	FACE WIDTH (A)	BORE (B)	OUTSIDE DIAMETER (D)	PULLEY WIDTH (W)	FACE DIAMETER (F)	ROWS OF RIVETS	NO. OF RIVETS	GA. MAT. (G)	WEIGHT (LBS / kg)
26FFI-52	Inch	1.61	Fitted with 1/2" Removable Reduction Bush - 3/8" Bush Available	3.25	2.06	3.25	1	6	14	0.75
	mm	40.89		82.55	52.32	82.55				0.34
ABFI-54	Inch	.74		3.35	1.12	2.75	1	6	14	0.75
	mm	18.80		85.10	28.45	69.85				0.34
ABFI-64	Inch	0.75		4.00	1.12	3.38	1	6	14	0.83
	mm	19.05		101.60	28.44	85.85				0.38
26FI-64	Inch	1.62		4.00	2.06	3.38	1	6	14	1.00
	mm	41.15		101.6	52.32	85.85				0.45
ABFI-76	Inch	0.75		4.75	1.12	4.00	2	18	14	1.09
	mm	19.05		120.65	28.44	101.60				0.49
BCFI-76	Inch	1.00		4.75	1.43	4.00	2	18	14	1.14
	mm	25.40		120.65	36.51	01.60				0.52
GAIISFI-88	Inch	0.62		5.5	0.85	5	2	18	14	1.32
	mm	15.87		139.7	21.6	127				0.60
BCFI-92	Inch	1.00		5.75	1.43	5.00	2	18	14	1.55
	mm	25.40		146.05	36.51	127.00				0.7
FPB2A-92	Inch	1.31		5.75	1.75	5.00	2	18	14	1.7
	mm	33.27		146.05	44.45	127.00				0.77

Every effort has been taken to ensure that the data listed in this catalogue is correct.
Finer Power Transmissions P/L will not accept liability for any damage or loss caused as a result of the data in this catalogue.

Single Row Bearing Idler Pulleys

Flat Flanged Idlers Cont.

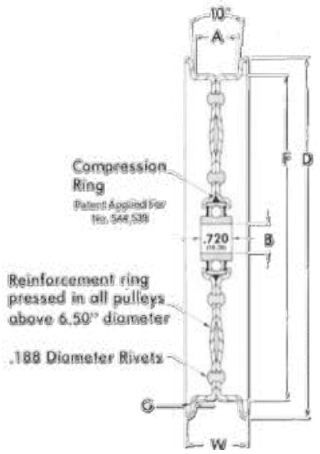

PART NO.	UNIT	FACE WIDTH (A)	BORE (B)	OUTSIDE DIAMETER (D)	PULLEY WIDTH (W)	FACE DIAMETER (F)	ROWS OF RIVETS	NO. OF RIVETS	GA. MAT. (G)	WEIGHT (LBS / kg)
26FI-92	Inch	1.62	Fitted with 1/2" Removable Reduction Bush - 3/8" Bush Available	5.75	2.06	5.00	2	18	14	1.75
	mm	41.14		146.05	52.39	127.00				0.79
32FI-92	Inch	2.00		5.75	2.43	5.00	2	18	14	1.85
	mm	50.80		146.05	61.91	127.00				0.84
ABFI-100	Inch	0.75		6.25	1.18	5.50	2	18	14	1.68
	mm	19.05		158.75	30.16	139.70				0.76
BCFI-100	Inch	1.00		6.25	1.43	5.50	2	18	14	1.75
	mm	25.40		158.75	36.51	139.70				0.79
24FFI-104	Inch	1.50		6.50	1.50	6.50	2	18	14	2.125
	mm	38.10		165.10	38.1	165.1				0.963
ABFI-108	Inch	0.75		6.75	1.18	6.00	2	18	14	1.91
	mm	19.05		171.45	30.16	152.40				0.87
BCFI-108	Inch	1.00		6.75	1.43	6.00	2	18	14	1.97
	mm	25.40		171.45	36.51	152.40				0.89
26FI-108	Inch	1.62		6.75	2.06	6.00	2	18	14	2.19
	mm	41.28		171.45	52.39	152.40				0.99
BCFI-124	Inch	1.00		7.75	1.43	7.00	2	18	14	2.46
	mm	25.40		196.85	36.51	177.80				1.12
32FFI-128	Inch	2.00		8.00	2.00	8.00	2	18	14	3.25
	mm	50.80		203.2	50.80	203.2				1.47
BCFI-140	Inch	1.00		8.75	1.43	8.00	2	18	14	3.01
	mm	25.40		222.25	36.51	203.20				1.37
DFI-144	Inch	1.50		9	1.93	8.00	2	18	14	3.36
	mm	38.10		228.6	49.21	203.20				1.52
32FI-144	Inch	2.00		9	2.43	8.00	2	18	14	3.56
	mm	50.80		228.6	61.91	203.20				1.61
DFI-176	Inch	1.50		11	1.93	10.00	2	18	14	4.71
	mm	38.10		279.4	49.31	254				4.71

Every effort has been taken to ensure that the data listed in this catalogue is correct.
Finer Power Transmissions P/L will not accept liability for any damage or loss caused as a result of the data in this catalogue.

Double Row Bearing Idler Pulleys

This Don Dye line of heavy duty double row ball bearing flat, flanged, and V groove idlers was developed to handle heavier loads that exceed the capacity of single row ball bearing idlers. The double row idlers are more stable when side loads or off center loads occur.
They are available with 3/8", 1/2", 5/8" and 3/4" bolt mounting. These riveted idlers are constructed from 13 gauge material. The high quality precision bearings made of 52100 bearing steel are pre-lubricated, have contact type seals for retention of high temperature lubricant to ensure protection against dust, dirt or other foreign matter. No re-lubrication is required. A compression ring is compressed between center of O.D. of bearing and center I.D. of pulley bearing pocket to assure a firm reliable fit of pulley more evenly to the outer bearing race resulting in minimum distortion of bearing O.D, (USA patent 4518372 foreign patents pending). Our tests have proven this method of bearing installation to give longer and more reliable bearing life.

V-Belt Idlers

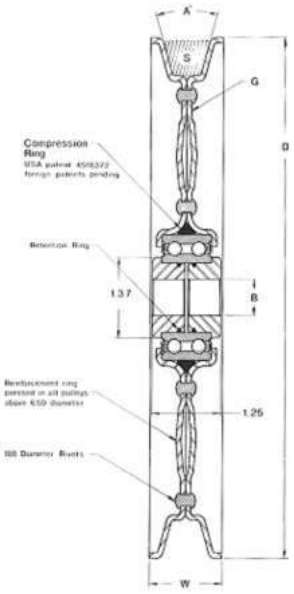

APPLICATIONS FOR IDLER PULLEYS

Accurately bore sized for easy, quick mounting on standard 1/2" or 5/8" bolts (1/2" bore removable sleeve std. in all pulleys) 3/8" sleeve is available if requested.
Pulleys are riveted for strength and durability- No spot welding is used.
Feature smoothly rolled out edges which eliminate belt chafing and scuffing
"Weep Holes" on the rivet circle allow water drainage when the pulley is mounted in a horizontal position.
Zinc Plated

PART NO.	UNIT	INC. ANGLE (A)	BORE (B)	OUTSIDE DIAMETER (D)	PULLEY WIDTH (W)	BELT SIZE	ROWS OF RIVETS	NO. OF RIVETS	GA. MAT. (G)	WEIGHT (LBS / kg)
2CVI-84	Inch	32°	To Suit Reduction Bush - 3/8", 1/2", 5/8, 3/4"	5.25	1.37	C	1	9	13.00	1.88
	mm			133.35	34.80					0.85
2CVI-117	Inch	32°		7.31	1.37	C	2	18	13.00	3
	mm			185.67	34.80					1.36
2CVI-144	Inch	32°		9	1.37	C	2	18	13.00	4.2
	mm			228.6	34.80					1.91

Every effort has been taken to ensure that the data listed in this catalogue is correct.
Finer Power Transmissions P/L will not accept liability for any damage or loss caused as a result of the data in this catalogue.

Double Row Bearing Idler Pulleys

This Don Dye line of heavy duty double row ball bearing flat, flanged, and V groove idlers was developed to handle heavier loads that exceed the capacity of single row ball bearing idlers. The double row idlers are more stable when side loads or off center loads occur.
They are available with 3/8", 1/2", 5/8" and 3/4" bolt mounting. These riveted idlers are constructed from 13 gauge material. The high quality precision bearings made of 52100 bearing steel are pre-lubricated, have contact type seals for retention of high temperature lubricant to ensure protection against dust, dirt or other foreign matter. No re-lubrication is required. A compression ring is compressed between center of O.D. of bearing and center I.D. of pulley bearing pocket to assure a firm reliable fit of pulley more evenly to the outer bearing race resulting in minimum distortion of bearing O.D, (USA patent 4518372 foreign patents pending). Our tests have proven this method of bearing installation to give longer and more reliable bearing life.

Flat Flanged Idlers

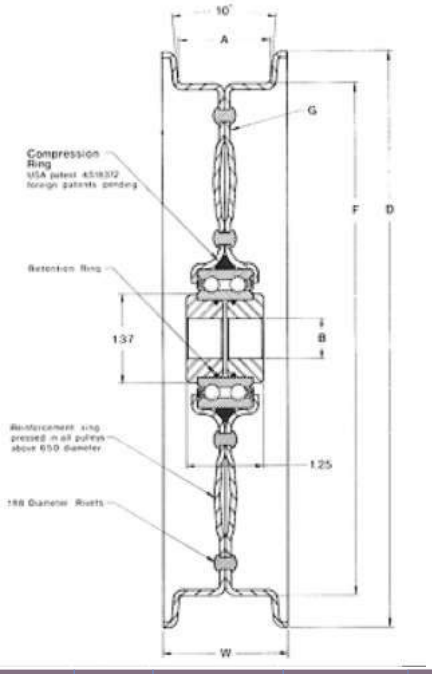

APPLICATIONS FOR IDLER PULLEYS

Accurately bore sized for easy, quick mounting on standard 1/2" or 5/8" bolts (1/2" bore removable sleeve std. in all pulleys) 3/8" sleeve is available if requested.
Pulleys are riveted for strength and durability- No spot welding is used.
Feature smoothly rolled out edges which eliminate belt chafing and scuffing
"Weep Holes" on the rivet circle allow water drainage when the pulley is mounted in a horizontal position.
Zinc Plated

PART NO.	UNIT	FACE WIDTH (A)	BORE (B)	OUTSIDE DIAMETER (D)	PULLEY WIDTH (W)	FACE DIAMETER (F)	ROWS OF RIVETS	NO. OF RIVETS	GA. MAT. (G)	WEIGHT (LBS / kg)
2S43FI-116	Inch	2.75	To Suit Reduction Bush - 3/8", 1/2", 5/8, 3/4"	7.5	3	6.5	2	18	13.00	3.64
	mm	69.85		190.5	76.2	165.1				1.65
208032092	Inch	2.00		5.75	2.48	5	2	18	13.00	2.62
	mm	50.80		146.05	63.10	127				1.19
209626108	Inch	1.62		6.75	2.06	6	2	18	13.00	3.04
	mm	41.14		171.45	52.40	152.4				1.4
209632108	Inch	2.00		6.75	2.48	6	2	18	13.00	3.27
	mm	50.80		171.45	63.10	152.4				1.48
212824144	Inch	1.50		9.00	2.03	8	2	18	13.00	4.55
	mm	38.10		228.60	51.56	230.2				2.07
212832144	Inch	2.00		9.00	2.57	8	2	18	13.00	4.89
	mm	50.80		228.60	65.27	203.2				2.22
212842160	Inch	2.62		10.00	3.31	8	2	18	13.00	6.58
	mm	66.65		254.00	84.07	203.2				2.99
212852160	Inch	3.25		10.00	3.87	8	2	18	13.00	6.81
	mm	82.55		254.00	98.30	203.02				3.09

Every effort has been taken to ensure that the data listed in this catalogue is correct.
Finer Power Transmissions P/L will not accept liability for any damage or loss caused as a result of the data in this catalogue.

Double Row Bearing Idler Pulleys

This Don Dye line of heavy duty double row ball bearing flat, flanged, and V groove idlers was developed to handle heavier loads that exceed the capacity of single row ball bearing idlers. The double row idlers are more stable when side loads or off center loads occur.
They are available with 3/8", 1/2", 5/8" and 3/4" bolt mounting. These riveted idlers are constructed from 13 gauge material. The high quality precision bearings made of 52100 bearing steel are pre-lubricated, have contact type seals for retention of high temperature lubricant to ensure protection against dust, dirt or other foreign matter. No re-lubrication is required. A compression ring is compressed between center of O.D. of bearing and center I.D. of pulley bearing pocket to assure a firm reliable fit of pulley more evenly to the outer bearing race resulting in minimum distortion of bearing O.D, (USA patent 4518372 foreign patents pending). Our tests have proven this method of bearing installation to give longer and more reliable bearing life.

Flat Faced Idlers

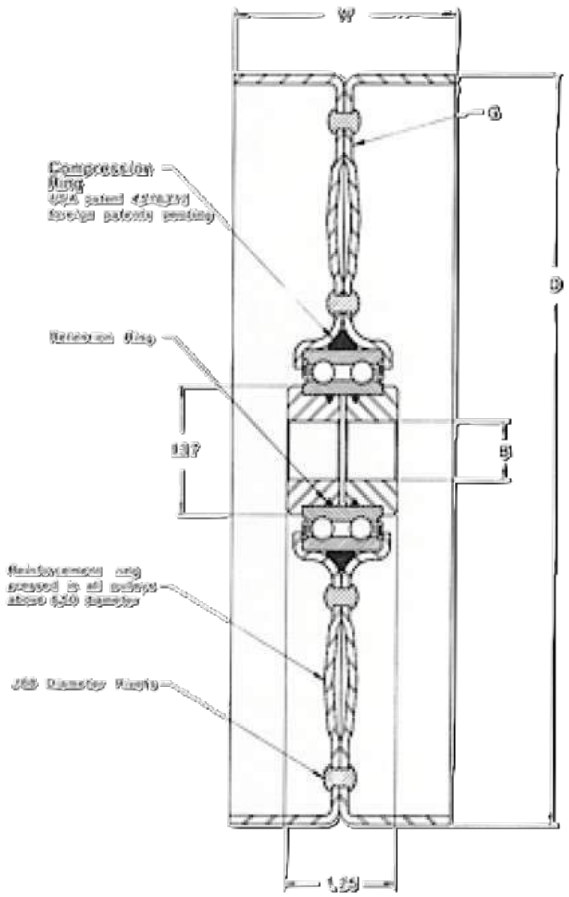

APPLICATIONS FOR IDLER PULLEYS

Accurately bore sized for easy, quick mounting on standard 1/2" or 5/8" bolts (1/2" bore removable sleeve std. in all pulleys) 3/8" sleeve is available if requested.
Pulleys are riveted for strength and durability- No spot welding is used.
Feature smoothly rolled out edges which eliminate belt chafing and scuffing
"Weep Holes" on the rivet circle allow water drainage when the pulley is mounted in a horizontal position.
Zinc Plated

PART NO.	UNIT	FACE WIDTH (A)	BORE (B)	OUTSIDE DIAMETER (D)	PULLEY WIDTH (W)	FACE DIAMETER (F)	ROWS OF RIVETS	NO. OF RIVETS	GA. MAT. (G)	WEIGHT (LBS / kg)
208032080	Inch	2.00	To Suit Reduction Bush - 3/8", 1/2", 5/8, 3/4"	5.00	2.00	5.00	2	18.00	13.00	2.32
	mm	50.80		127.00	50.80	127.00				1.05
208036080	Inch	2.25		5.00	2.25	5.00	2	18.00	13.00	2.41
	mm	57.15		127.00	57.15	127.00				1.10
208040080	Inch	2.50		5.00	2.50	5.00	2	18.00	13.00	2.51
	mm	63.50		127.00	63.50	127.00				1.14
208048080	Inch	3.00		5.00	3.00	5.00	2	18.00	13.00	2.66
	mm	76.20		127.00	76.20	127.00				1.21

Every effort has been taken to ensure that the data listed in this catalogue is correct.
Finer Power Transmissions P/L will not accept liability for any damage or loss caused as a result of the data in this catalogue.

Double Row Bearing Idler Pulleys

Flat Face Idlers Cont.

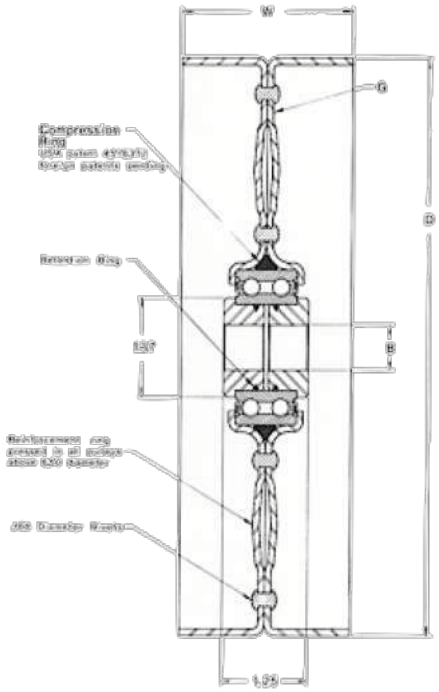

PART NO.	UNIT	FACE WIDTH (A)	BORE (B)	OUTSIDE DIAMETER (D)	PULLEY WIDTH (W)	FACE DIAMETER (F)	ROWS OF RIVETS	NO. OF RIVETS	GA. MAT. (G)	WEIGHT (LBS / kg)
208052080	Inch	3.25	To Suit Reduction Bush - 3/8", 1/2", 5/8, 3/4"	5.00	3.25	5.00	2	18.00	13.00	2.77
	mm	82.55		127.00	82.55	127.00				1.26
210432104	Inch	2.00		6.50	2.00	6.50	2	18.00	13.00	3.19
	mm	50.80		165.10	50.80	165.10				1.45
210436104	Inch	2.25		6.50	2.25	6.50	2	18.00	13.00	3.32
	mm	57.15		165.10	57.15	165.10				1.51
210440104	Inch	2.50		6.50	2.50	6.50	2	18.00	13.00	3.42
	mm	63.50		165.10	63.50	165.10				1.55
210448104	Inch	3.00		6.50	3.00	6.50	2	18.00	13.00	3.68
	mm	76.20		165.10	76.20	165.10				1.67
210452104	Inch	3.25		6.50	3.25	6.50	2	18.00	13.00	3.82
	mm	82.55		165.10	82.55	165.10				1.74
210456104	Inch	3.50		6.50	3.50	6.50	2	18.00	13.00	3.93
	mm	88.90		165.10	88.90	165.10				1.78
212832128	Inch	2.00		8.00	2.00	8.00	2	18.00	13.00	4.28
	mm	50.80		203.20	50.80	203.20				1.94
212840128	Inch	2.50		8.00	2.50	0.00	2	18.00	13.00	4.55
	mm	63.50		203.20	63.50	203.20				2.07
212848128	Inch	3.00		8.00	3.00	8.00	2	18.00	13.00	4.89
	mm	76.20		203.20	76.20	203.20				2.22
212852128	Inch	3.25		8.00	3.25	8.00	2	18.00	13.00	5.03
	mm	82.55		203.20	82.55	203.20				2.28

Every effort has been taken to ensure that the data listed in this catalogue is correct.
Finer Power Transmissions P/L will not accept liability for any damage or loss caused as a result of the data in this catalogue.

PART NO.	TYPE	DESCRIPTION	PAGE
AG2318-A	Sprocket	1/2" Pitch 18 Tooth	1.4.40
AG2318-S	Sprocket	1/2" Pitch 19 Tooth	1.4.40
AG2321	Pulley	A Section	2.5.10
AG2321-A	Pulley	A Section	2.5.10
AG2331	Pulley	Round Belt	2.5.11
AG2331-A	Pulley	Round Belt	2.5.11A
AG2341-ALE	Rubber Tyre	-	2.5.15
AG2341-ALS	Rubber Tyre	-	2.5.15
AG2342-A2T	Rubber Tyre	-	2.5.15
AG2352	Pulley	Flat Flanged	2.5.14
AG2352-A	Pulley	Flat Flanged	2.5.14
AG2354-AS	Pulley	Flat Flanged	2.5.14
AG2354-FK	Pulley	Flat Flanged	2.5.14
AG2362-A	Pulley	Flat Flanged	2.5.14
AG2362-S	Pulley	Flat Flanged	2.5.14
AG2365-1AM	Pulley	Flat Single Flange	2.5.13
AG2365-A	Pulley	Flat Single Flange	2.5.13
AG2366-AS	Pulley	Flat Flanged	2.5.14
AG2367-A	Pulley	Flat Non Flanged	2.5.12
AG2413	Pulley	Flat Flanged	2.5.14
AG2413-A	Pulley	Flat Flanged	2.5.14
AG2416	Sprocket	5/8" Pitch 17 Tooth	1.4.40
AG2416-9	Sprocket	5/8" Pitch 17 Tooth	1.4.40
AG2416-A	Sprocket	5/8" Pitch 17 Tooth	1.4.40
AG2416-A6	Sprocket	5/8" Pitch 17 Tooth	1.4.40
AG2416-AP	Sprocket	5/8" Pitch 17 Tooth	1.4.40
AG2416-B	Sprocket	1-1/4" Pitch 9 Tooth	1.4.38
AG2417	Sprocket	3/4" Pitch x 15 Tooth	1.4.40
AG2417-A	Sprocket	3/4" Pitch x 15 Tooth	1.4.40
AG2421	Pulley	A Section	2.5.10
AG2421-A	Pulley	A Section	2.5.10
AG2422	Sprocket	41.91mm Pitch 7 Tooth	1.4.37
AG2422-1AF	Sprocket	41.4mm Pitch 7 Tooth	1.4.37
AG2427	Sprocket	1-1/2" Pitch 8 Tooth	1.4.39
AG2427-1AF	Sprocket	1-1/2" Pitch 8 Tooth	1.4.39
AG2427-AF	Sprocket	1-1/2" Pitch 8 Tooth	1.4.39
AG2427-AM	Sprocket	1-1/2" Pitch 8 Tooth	1.4.39
AG2436	Sprocket	5/8" Pitch 17 Tooth	1.4.40
AG2436-A	Sprocket	5/8" Pitch 17 Tooth	1.4.40
AG2437	Sprocket	3/4" Pitch 15 Tooth	1.4.40
AG2437-9	Sprocket	3/4" Pitch 15 Tooth	1.4.40
AG2437-A	Sprocket	3/4" Pitch 15 Tooth	1.4.40
AG2437-A9	Sprocket	3/4" Pitch 15 Tooth	1.4.40
AG2438-1AF	Sprocket	1-1/4" Pitch 11 Tooth	1.4.39
AG2452	Pulley	Flat Flanged	2.5.14
AG2452-A	Pulley	Flat Flanged	2.5.14
AG2565-2AF	Sprocket	41.4mm Pitch 8 Tooth	1.4.39
AG2565-3AF	Sprocket	41.4mm Pitch 8 Tooth	1.4.39
AG2566-2AF	Sprocket	41.4mm Pitch 8 Tooth	1.4.39
AG2566-4AF	Sprocket	41.4mm Pitch 8 Tooth	1.4.39
AG2613	Pulley	Flat Flanged	2.5.14
AG2613-13	Pulley	Flat Flanged	2.5.14
AG2613-A	Pulley	Flat Flanged	2.5.14
AG2621	Pulley	A/B/C Section	2.5.10
AG2621-A	Pulley	A/B/C Section	2.5.10
AG2721	Pulley	B/C Section	2.5.10
AG2814	Pulley	Flat Flanged	2.5.14
B13516-A	Pulley	B Section	2.5.6
B13516-B	Pulley	B Section	2.5.6
C15919-B9	Pulley	C Section	2.5.6
F14026-B	Pulley	Flat Flanged	2.5.7
F14416-A	Pulley	Flat Flanged	2.5.7
F14416-B	Pulley	Flat Flanged	2.5.7
F16416-B	Pulley	Flat Flanged	2.5.7
F16424-B6	Pulley	Flat Flanged	2.5.7
F26448-B6	Pulley	Flat Flanged	2.5.8
F26452-B9	Pulley	Flat Flanged	2.5.8
S24032-A	Pulley	Flat Non Flanged	2.5.9
S24032-B	Pulley	Flat Non Flanged	2.5.9
S25252-A	Pulley	Flat Non Flanged	2.5.9
S25252-C	Pulley	Flat Non Flanged	2.5.9
S26452-B6	Pulley	Flat Non Flanged	2.5.9
S28052-B	Pulley	Flat Non Flanged	2.5.9

Every effort has been taken to ensure that the data listed in this catalogue is correct.
Finer Power Transmissions P/L will not accept liability for any damage or loss caused as a result of the data in this catalogue.

PART NO.	TYPE	DESCRIPTION	PAGE	PART NO.	TYPE	DESCRIPTION	PAGE
208032080	Pulley	Flat Non Flanged	2.5.22	ABFI-100	Pulley	Flat Flanged	2.5.19
208032092	Pulley	Flat Flanged	2.5.21	ABFI-108	Pulley	Flat Flanged	2.5.19
208036080	Pulley	Flat Non Flanged	2.5.22	ABFI-54	Pulley	Flat Flanged	2.5.18
208040080	Pulley	Flat Non Flanged	2.5.22	ABFI-64	Pulley	Flat Flanged	2.5.18
208048080	Pulley	Flat Non Flanged	2.5.22	ABFI-76	Pulley	A/B Section	2.5.18
208052080	Pulley	Flat Non Flanged	2.5.23	ABVI-80	Pulley	A/B Section	2.5.16
209626108	Pulley	Flat Flanged	2.5.21	AVI-40	Pulley	A Section	2.5.16
209632108	Pulley	Flat Flanged	2.5.21	AVI-56	Pulley	A Section	2.5.16
210432104	Pulley	Flat Non Flanged	2.5.23	AVI-64	Pulley	A Section	2.5.16
210436104	Pulley	Flat Non Flanged	2.5.23	BCFI-100	Pulley	Flat Flanged	2.5.19
210440104	Pulley	Flat Non Flanged	2.5.23	BCFI-108	Pulley	Flat Flanged	2.5.19
210448104	Pulley	Flat Non Flanged	2.5.23	BCFI-124	Pulley	Flat Flanged	2.5.19
210452104	Pulley	Flat Non Flanged	2.5.23	BCFI-140	Pulley	Flat Flanged	2.5.19
210456104	Pulley	Flat Non Flanged	2.5.23	BCFI-76	Pulley	Flat Flanged	2.5.18
212824144	Pulley	Flat Flanged	2.5.21	BCFI-92	Pulley	Flat Flanged	2.5.18
212832128	Pulley	Flat Non Flanged	2.5.23	BCVI-117	Pulley	B/C Section	2.5.17
212832144	Pulley	Flat Flanged	2.5.21	BCVI-81	Pulley	B/C Section	2.5.17
212840128	Pulley	Flat Non Flanged	2.5.23	BVI-100	Pulley	B Section	2.5.17
212842160	Pulley	Flat Flanged	2.5.21	BVI-108	Pulley	B Section	2.5.17
212848128	Pulley	Flat Non Flanged	2.5.23	BVI-60	Pulley	B Section	2.5.16
212852128	Pulley	Flat Non Flanged	2.5.23	BVI-70	Pulley	B Section	2.5.16
212852160	Pulley	Flat Flanged	2.5.21	BVI-80	Pulley	B Section	2.5.17
24FFI-104	Pulley	Flat Non Flanged	2.5.19	CVI-100	Pulley	C Section	2.5.17
26FFI-52	Pulley	Flat Non Flanged	2.5.18	CVI-117	Pulley	C Section	2.5.17
26FI-108	Pulley	Flat Flanged	2.5.19	CVI-144	Pulley	C Section	2.5.17
26FI-64	Pulley	Flat Flanged	2.5.8	CVI-84	Pulley	C Section	2.5.17
26FI-92	Pulley	Flat Flanged	2.5.19	DFI-144	Pulley	Flat Flanged	2.5.19
2CVI-117	Pulley	C Section	2.5.20	DFI-176	Pulley	Flat Flanged	2.5.19
2CVI-144	Pulley	C Section	2.5.20	FPB2A-92	Pulley	Flat Flanged	2.5.18
2CVI-84	Pulley	C Section	2.5.20	GAIISFI-88	Pulley	Flat Flanged	2.5.18
2S43FI-116	Pulley	Flat Flanged	2.5.21	TABVI-80Plain	Pulley	A/B Section	2.5.16
32FFI-128	Pulley	Flat Non Flanged	2.5.19	3/8-006	Pulley	Reduction Insert	-
32FI-144	Pulley	Flat Flanged	2.5.19	1/2-008	Pulley	Reduction Insert	-
32FI-92	Pulley	Flat Flanged	2.5.19	3/8-106	Pulley	Reduction Insert	-
56RG-54	Pulley	A Section	2.5.16	1/2-108	Pulley	Reduction Insert	-
5VI-128	Pulley	5V Section	2.5.17	5/8-110	Pulley	Reduction Insert	-
5VI-137	Pulley	5V Section	2.5.17	3/4-112	Pulley	Reduction Insert	-
5VI-152	Pulley	5V Section	2.5.17	-	-	-	-

Every effort has been taken to ensure that the data listed in this catalogue is correct.
Finer Power Transmissions P/L will not accept liability for any damage or loss caused as a result of the data in this catalogue.