FINERPOWER TRANSMISSIONS

Nachi Premium Bearings

NACHI

Contents

NACHI

NACHI BEARINGS

Deep Groove Ball Bearings 5.1.4
6000 Series 5.1.4
6200 Series 5.1.8
6300 Series 5.1.12
6300 Series w/ Snap Ring 5.1.14
62/22 & 63/32 Series and Specials. 5.1.14
6800 (61800) Series. 5.1.16
6900 (61900) Series. 5.1.18
16000 Series. 5.1.20
Tapered Roller Bearings 5.1.22
30200 Series. 5.1.22
30300 Series. 5.1.24
32000 Series. 5.1.26
32200 Series. 5.1.28
32300 Series. 5.1.30
Inch Series 5.1.32
Spherical Roller Bearings 5.1.34
21300 Series. 5.1.34
22200 Series. 5.1.36
22300 Series. 5.1.38
23000 Series. 5.1.40
23100 Series. 5.1.42
23200 Series. 5.1.44
24000 & 24100 Series 5.1.46
Shaker Screen EXQ-V Series 5.1.46
Spherical Roller Thrust Bearings 5.1.48
Cylindrical Roller Bearings 5.1.50
200 & 2200 Series 5.1.50
300 Series 5.1.52
Double Row Cylindrical Roller Bearings 5.1.54
Thrust Ball Bearings. 5.1.56
51100 Series. 5.1.57
51200 Series. 5.1.58
51300 Series. 5.1.60
Inch Series "0". 5.1.62
Angular Contact Ball Bearings 5.1.64
5200 - 5300 Series. 5.1.64
7000 Series Angular Contact Precision 5.1.66
7200-7300 Series Angular Contact 5.1.68
Ball Screw Precision Angular Contact Bearings 5.1.70
TAB Series 5.1.70
Double Row Self Aligning Ball Bearings 5.1.72
1200 & 1300 & 2200 Series 5.1.72
1200 & 1300 & 2200 Tapered Bore Series. 5.1.74
Automotive Bearings 5.1.76

Every effort has been taken to ensure that the data listed in this catalogue is correct.
Finer Power Transmissions P/L will not accept liability for any damage or loss caused as a result of the data in this catalogue.

NACHI
Finer Power Transmissions P/L | www.finerpt.com
Deep Groove Ball Bearings
6000 Series

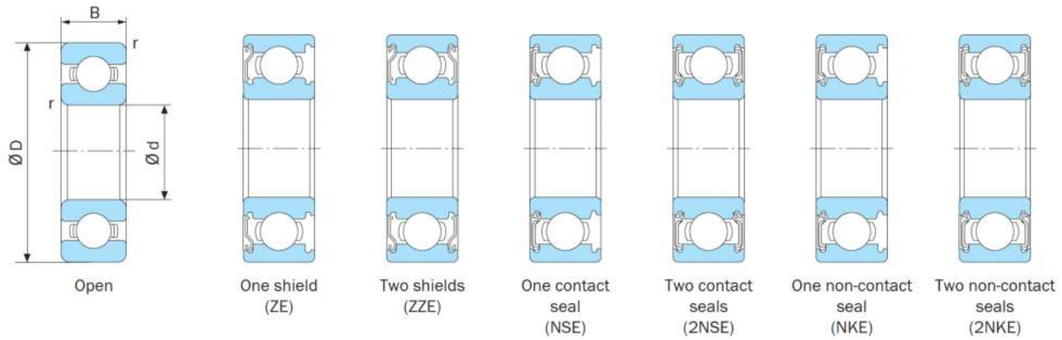

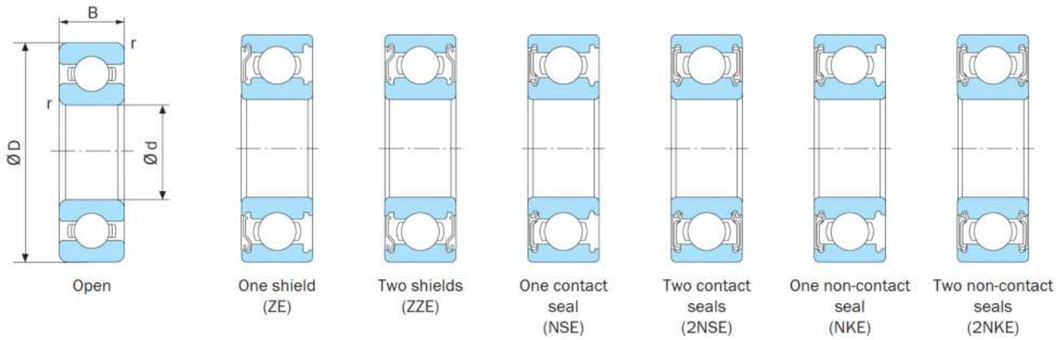

Boundary dimensions (mm)				Bearing No					Basic dynamic load rating Cr (N)	Basic static load rating Cor (N)	Factor fo	Limiting speed (min-1)			Abutment and fillet dimensions (mm)			Mass (kg)	Bearing No
												Grease lubrication		Oil lubrication					
d	D	B	r (min)	Open type	Shield Type	Contact seal type	Non-contact seal type*					Open type, ZE, ZZE,NKE,2NKE	NSE, 2NSE	Open type, ZE	da (min)	Da (max)	ra (max)		
10	26	8	0.3	6000	6000ZZE	6000-2NSE	6000-2NKE		4550	1970	12.4	30000	22000	36000	12	24	0.3	0.019	6000
12	28	8	0.3	6001	6001ZZE	6001-2NSE	6001-2NKE		5100	2390	13.2	28000	18000	32000	14	26	0.3	0.023	6001
15	32	9	0.3	6002	6002ZZE	6002-2NSE	6002-2NKE		5600	2840	13.9	24000	15000	28000	17	30	0.3	0.032	6002
17	35	10	0.3	6003	6003ZZE	6003-2NSE	6003-2NKE		6000	3250	14.3	22000	14000	26000	19	33	0.3	0.039	6003
20	42	12	0.6	6004	6004ZZE	6004-2NSE	6004-2NKE		9400	5000	13.9	18000	11000	21000	24	38	0.6	0.07	6004
25	47	12	0.6	6005	6005ZZE	6005-2NSE	6005-2NKE		10100	5850	14.5	15000	9500	18000	29	43	0.6	0.079	6005
30	55	13	1	6006	6006ZZE	6006-2NSE	6006-2NKE		13200	8300	14.8	13000	8000	15000	35	50	1	0.117	6006
35	62	14	1	6007	6007ZZE	6007-2NSE	6007-2NKE		16000	10300	14.8	12000	6800	14000	40	57	1	0.156	6007
40	68	15	1	6008	6008ZZE	6008-2NSE	6008-2NKE		16800	11500	15.3	10000	6100	12000	45	63	1	0.194	6008
45	75	16	1	6009	6009ZZE	6009-2NSE	6009-2NKE		20900	15200	15.3	9200	5400	11000	50	70	1	0.246	6009
50	80	16	1	6010	6010ZZE	6010-2NSE	6010-2NKE		21800	16600	15.6	8500	5000	10000	55	75	1	0.264	6010
55	90	18	1.1	6011	6011ZZE	6011-2NSE	6011-2NKE		28300	21300	15.4	7700	4500	9000	61	84	1	0.384	6011
60	95	18	1.1	6012	6012ZZE	6012-2NSE	6012-2NKE		29400	23200	15.5	7100	4100	8500	66	89	1	0.418	6012
65	100	18	1.1	6013	6013ZZE	6013-2NSE	6013-2NKE		30500	25200	15.7	6700	4000	8000	71	94	1	0.438	6013
70	110	20	1.1	6014	6014ZZE	6014-2NSE	6014-2NKE		38000	31000	15.6	6100	3600	7100	76	104	1	0.607	6014
75	115	20	1.1	6015	6015ZZE	6015-2NSE	6015-2NKE		39500	33500	15.7	5700	3400	6700	81	109	1	0.645	6015
80	125	22	1.1	6016	6016ZZ	6016-2NSL	-		47500	39500	15.6	5300	-	6300	86	119	1	0.855	6016
85	130	22	1.1	6017	6017ZZ	6017-2NSL	-		49500	43000	15.7	5000	-	6000	91	124	1.1	0.895	6017
90	140	24	1.5	6018	6018ZZ	6018-2NSL	-		58000	49500	15.6	4800	-	5600	97	133	1.5	1.17	6018
95	145	24	1.5	6019	6019ZZ	6019-2NSL	-		60500	54000	15.8	4500	-	5300	102	138	1.5	1.22	6019
100	150	24	1.5	6020	6020ZZ	6020-2NSL	-		60000	54000	15.9	4300	-	5300	107	143	1.5	1.26	6020
105	160	26	2	6021	6021ZZ	6021-2NS	-		72500	65500	15.8	4000	-	4800	113	152	2	1.6	6021
110	170	28	2	6022	6022ZZ	6022-2NS	-		84500	73000	15.5	3800	-	4500	118	162	2	1.97	6022
120	180	28	2	6024	6024ZZ	6024-2NS	-		88000	79500	15.7	3600	-	4300	128	172	2	2.67	6024
130	200	33	2	6026	6026ZZ	6026-2NS	-		106000	101000	15.7	3200	-	3800	138	192	2	3.92	6026
140	210	33	2	6028	6028ZZ	-	-		110000	109000	15.9	3000	-	3600	148	202	2	4.15	6028
150	225	35	2.1	6030	6030ZZ	-	-		126000	126000	15.9	2800	-	3200	159	216	2	4.48	6030

* Not a stocked range although available on request.

Every effort has been taken to ensure that the data listed in this catalogue is correct.
Finer Power Transmissions P/L will not accept liability for any damage or loss caused as a result of the data in this catalogue.
Every effort has been taken to ensure that the data listed in this catalogue is correct.
Finer Power Transmissions P/L will not accept liability for any damage or loss caused as a result of the data in this catalogue.

NACHI
Finer Power Transmissions P/L | www.finerpt.com

Deep Groove Ball Bearings
6000 Series w/ Snap Ring

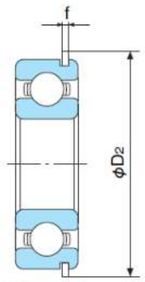

With snap ring (NR)

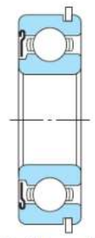

Shield type with snap ring (ZNR)

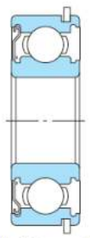

Shield type with snap ring (ZENR)

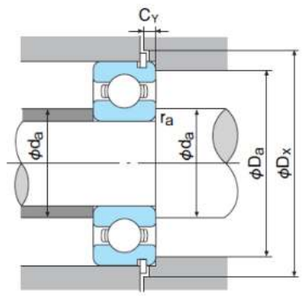

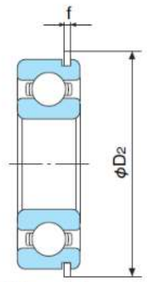

With snap ring (NR)

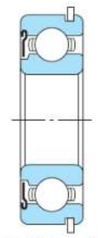

Shield type with snap ring (ZNR)

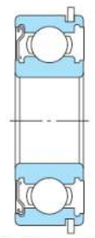

Shield type with snap ring (ZENR)

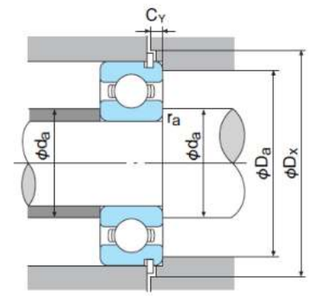

Boundary dimensions (mm)					Dimensions of snap ring groove and snap ring (mm)				Bearing No.				Basic dynamic load rating Cr (N)	Basic static load rating Cor (N)	Factor fo	Limiting speed (min-1)		Abutment and fillet dimensions (mm)		Bearing No.
d	D	B	r (min)	r1 (min)	D1 (max)	a (max)	b (min)	f (max)	Contact seal type	Open type*	Shield type					Grease lubrication	Oil lubrication	da (min)	Da (max)	
15	32	9	0.3	0.3	30.15	2.06	1.35	1.12	6002-2NSENR	6002NR	6002ZENR		5600	2840	13.9	24000	28000	17	30	6002
17	35	10	0.3	0.3	33.17	2.06	1.35	1.12	6003-2NSENR	6003NR	6003ZENR		6000	3250	14.3	22000	26000	19	33	6003
20	42	12	0.6	0.5	39.75	2.06	1.35	1.12	6004-2NSENR	6004NR	6004ZENR		9400	5000	13.9	18000	21000	24	38	6004
25	47	12	0.6	0.5	44.6	2.06	1.35	1.12	6005-2NSENR	6005NR	6005ZENR		10100	5850	14.5	15000	18000	29	43	6005
30	55	13	1	0.5	52.6	2.08	1.35	1.12	6006-2NSENR	6006NR	6006ZENR		13200	8300	14.8	13000	15000	35	50	6006
35	62	14	1	0.5	59.61	2.08	1.9	1.7	6007-2NSENR	6007NR	6007ZENR		16000	10300	14.8	12000	14000	40	57	6007
40	68	15	1	0.5	64.82	2.49	1.9	1.7	6008-2NSENR	6008NR	6008ZENR		16800	11500	15.3	10000	12000	45	63	6008
45	75	16	1	0.5	71.83	2.49	1.9	1.7	6009-2NSENR	6009NR	6009ZENR		20900	15200	15.3	9200	11000	50	70	6009
50	80	16	1	0.5	76.81	2.49	1.9	1.7	6010-2NSENR	6010NR	6010ZENR		21800	16600	15.6	8500	10000	55	75	6010
65	100	18	1.1	0.5	96.8	2.87	2.7	2.46	-	6013NR	6013ZENR		30500	25200	15.7	6700	8000	71	94	6013
70	110	20	1.1	0.5	106.81	2.87	2.7	2.46	-	6014NR	6014ZENR		38000	31000	15.6	6100	7100	76	104	6014
75	115	20	1.1	0.5	111.81	2.87	2.7	2.46	-	6015NR	6015ZENR		39500	33500	15.7	5700	6700	81	109	6015
80	125	22	1.1	0.5	120.22	2.87	3.1	2.82	-	6016NR	6016ZENR		47500	39500	15.6	5300	6300	86	119	6016

* Not a stocked range although available on request. .

Every effort has been taken to ensure that the data listed in this catalogue is correct.
Finer Power Transmissions P/L will not accept liability for any damage or loss caused as a result of the data in this catalogue.

Every effort has been taken to ensure that the data listed in this catalogue is correct.
Finer Power Transmissions P/L will not accept liability for any damage or loss caused as a result of the data in this catalogue.

NACHI
Finer Power Transmissions P/L | www.finerpt.com
Deep Groove Ball Bearings
6200 Series

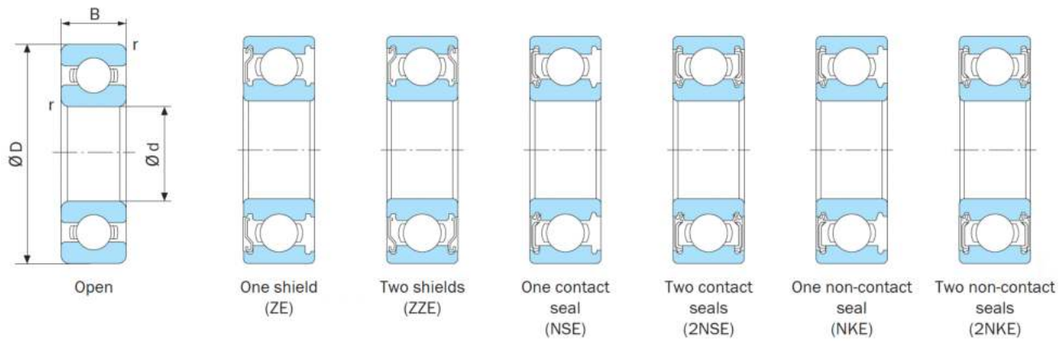

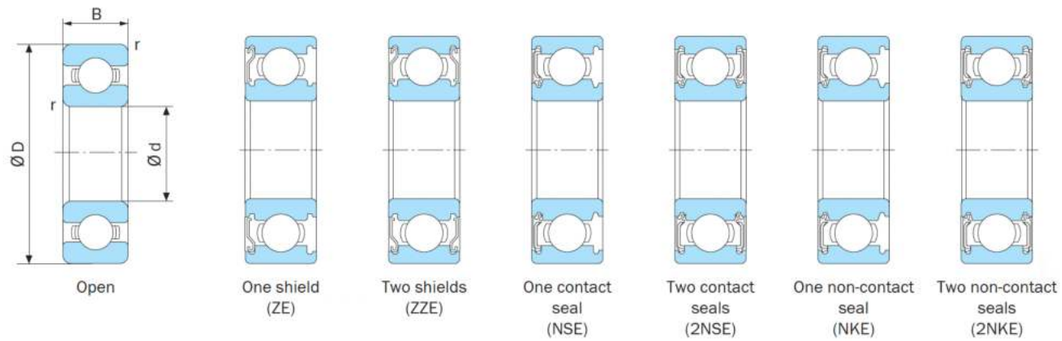

Boundary dimensions (mm)				Bearing No					Basic dynamic load rating Cr (N)	Basic static load rating Cor (N)	Factor fo	Limiting speed (min-1)			Abutment and fillet dimensions (mm)			Mass (kg)	Bearing No
												Grease lubrication		Oil lubrication					
d	D	B	r (min)	Open type	Shield type	Contact seal type	Non-contact seal type*					Open type, ZE, ZZE,NKE,2NKE	NSE, 2NSE	Open type, ZE	da (min)	Da (max)	ra (max)		
10	30	9	0.6	6200	6200ZZE	6200-2NSE	6200-2NKE		5100	2390	13.2	25000	18000	30000	15	25	0.6	0.032	6200
12	32	10	0.6	6201	6201ZZE	6201-2NSE	6201-2NKE		6800	3050	12.3	22000	17000	28000	17	27	0.6	0.037	6201
15	35	11	0.6	6202	6202ZZE	6202-2NSE	6202-2NKE		7650	3700	13.1	20000	15000	24000	20	30	0.6	0.045	6202
17	40	12	0.6	6203	6203ZZE	6203-2NSE	6203-2NKE		9550	4800	13.1	18000	12000	21000	22	35	0.6	0.6	6203
20	47	14	1	6204	6204ZZE	6204-2NSE	6204-2NKE		12800	6600	13.1	16000	11000	18000	26	41	1	0.106	6204
25	52	15	1	6205	6205ZZE	6205-2NSE	6205-2NKE		14000	7900	13.9	13000	9000	16000	31	46	1	0.128	6205
30	62	16	1	6206	6206ZZE	6206-2NSE	6206-2NKE		19500	11300	13.9	11000	7500	13000	36	56	1	0.199	6206
35	72	17	1.1	6207	6207ZZE	6207-2NSE	6207-2NKE		25700	15300	13.8	9800	6300	11000	42	65	1	0.288	6207
40	80	18	1.1	6208	6208ZZE	6208-2NSE	6208-2NKE		29100	17900	14	8700	5600	10000	47	73	1	0.366	6208
45	85	19	1.1	6209	6209ZZE	6209-2NSE	6209-2NKE		32500	20500	14.1	7800	5300	9300	52	78	1	0.407	6209
50	90	20	1.1	6210	6210ZZE	6210-2NSE	6210-2NKE		35000	23200	14.4	7100	4800	8600	57	83	1	0.463	6210
55	100	21	1.5	6211	6211ZZE	6211-2NSE	6211-2NKE		43500	29300	14.4	6400	4300	7700	64	91	1.5	0.607	6211
60	110	22	1.5	6212	6212ZZE	6212-2NSE	6212-2NKE		52500	36000	14.3	6000	3800	7100	69	101	1.5	0.783	6212
65	120	23	1.5	6213	6213ZZE	6213-2NSE	6213-2NKE		57000	40000	14.4	5500	3600	6500	74	111	1.5	0.99	6213
70	125	24	1.5	6214	6214ZZE	6214-2NSE	6214-2NKE		62000	44000	14.4	5100	3400	6300	79	116	1.5	1.07	6214
75	130	25	1.5	6215	6215ZZE	6215-2NSE	6215-2NKE		66000	49500	14.7	4800	3200	5600	84	121	1.5	1.18	6215
80	140	26	2	6216	6216ZZ	6216-2NSL	6216NK		72500	53000	14.6	4500	3000	5300	90	130	2	1.4	6216
85	150	28	2	6217	6217ZZ	6217-2NSL	6217NK		84000	62000	14.5	4300	2800	5000	95	140	2	1.79	6217
90	160	30	2	6218	6218ZZ	6218-2NSL	6218NK		96000	71500	14.5	4000	2600	4800	100	150	2	2.15	6218
95	170	32	2.1	6219	6219ZZ	6219-2NSL	6219NK		109000	81500	14.4	3800	2600	4500	107	158	2	2.62	6219
100	180	34	2.1	6220	6220ZZ	6220-2NSL	6220NK		122000	93000	14.4	3600	2400	4300	112	168	2	3.14	6220
105	190	36	2.1	6221	6221ZZ	6221-2NS	-		133000	104000	14.3	3400	-	4000	117	178	2	3.76	6221
110	200	38	2.1	6222	6222ZZ	6222-2NS	-		144000	117000	14.3	3200	-	3800	122	188	2	4.36	6222
120	215	40	2.1	6224	6224ZZ	-	-		145000	118000	14.4	2900	-	3400	132	203	2	5.15	6224

* Not a stocked range although available on request. .

Every effort has been taken to ensure that the data listed in this catalogue is correct.
Finer Power Transmissions P/L will not accept liability for any damage or loss caused as a result of the data in this catalogue.
Every effort has been taken to ensure that the data listed in this catalogue is correct.
Finer Power Transmissions P/L will not accept liability for any damage or loss caused as a result of the data in this catalogue.

NACHI
Finer Power Transmissions P/L | www.finerpt.com
Deep Groove Ball Bearings
6200 Series w/ Snap Ring

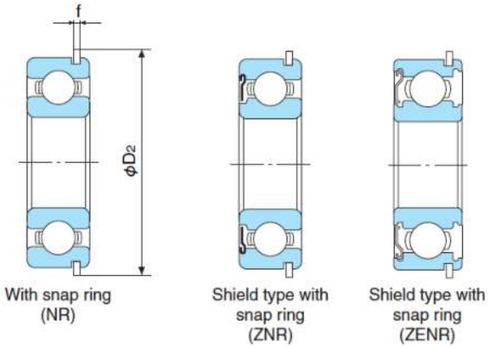

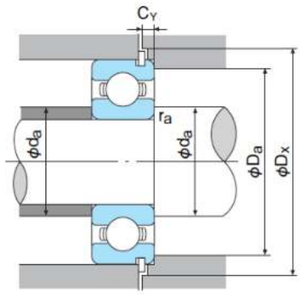

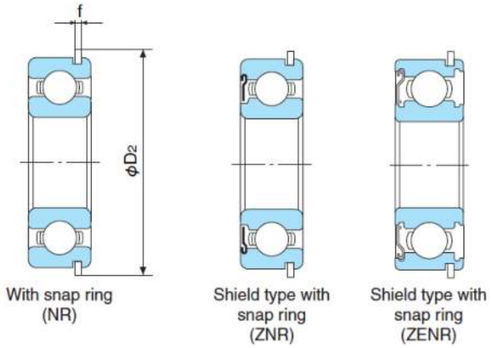

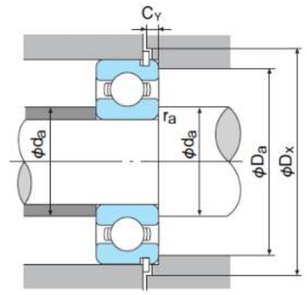

Boundary dimensions (mm)					Dimensions of snap ring groove and snap ring (mm)				Bearing No.				Basic dynamic load rating Cr (N)	Basic static load rating Cor (N)	Factor fo	Limiting speed (min-1)		Abutment and fillet dimensions (mm)		Bearing No.	Mass (kg)
d	D	B	r (min)	r1 (min)	D1 (max)	a (max)	b (min)	f (max)	Contact seal type	Open type*	Shield type					Grease lubrication	Oil lubrication	da (min)	Da (max)		
12	32	10	0.6	0.5	30.15	2.06	1.35	1.12	6201-2NSENR	6201NR	6201ZENR		6800	3050	12.3	22000	28000	17	27	6201	0.037
15	35	11	0.6	0.5	39.75	2.06	1.35	1.12	6202-2NSENR	6202NR	6202ZENR		7650	3700	13.1	20000	24000	21	30	6202	0.045
17	40	12	0.6	0.5	44.6	2.46	1.35	1.12	6203-2NSENR	6203NR	6203ZENR		9550	4800	13.1	18000	21000	22	35	6203	0.065
20	47	14	1	0.5	44.6	2.46	1.35	1.12	6204-2NSENR	6204NR	6204ZENR		12800	6600	13.1	16000	18000	26	41	6204	0.106
25	52	15	1	0.5	49.73	2.46	1.35	1.12	6205-2NSENR	6205NR	6205ZENR		14000	7900	13.9	13000	16000	31	46	6205	0.128
30	62	16	1	0.5	59.61	3.28	1.9	1.7	6206-2NSENR	6206NR	6206ZENR		19500	11300	13.9	11000	13000	36	56	6206	0.199
35	72	17	1.1	0.5	68.81	3.28	1.9	1.6	6207-2NSENR	6207NR	6207ZENR		25700	15300	13.8	9800	11000	42	65	6207	0.288
40	80	18	1.1	0.5	76.81	3.28	1.9	1.7	6208-2NSENR	6208NR	6208ZENR		29100	17900	14	8700	10000	47	73	6208	0.366
45	85	19	1.1	0.5	81.81	3.28	1.9	1.7	6209-2NSENR	6209NR	6209ZENR		32500	20500	14.1	7800	9300	52	78	6209	0.407
50	90	20	1.1	0.5	86.79	3.28	2.7	2.46	6210-2NSENR	6210NR	6210ZENR		35000	23200	14.4	7100	8600	57	83	6210	0.463
55	100	21	1.5	0.5	96.8	3.28	2.7	2.46	6211-2NSENR	6211NR	6211ZENR		43500	29300	14.4	6400	7700	64	91	6211	0.607
60	110	22	1.5	0.5	106.81	3.28	2.7	2.46	6212-2NSENR	6212NR	6212ZENR		52500	36000	14.3	6000	7100	69	101	6212	0.783
65	120	23	1.5	0.5	115.21	4.06	3.1	2.82	-	6213NR	6213ZENR		57000	40000	14.4	5500	6500	74	111	6213	0.99
80	140	26	2	0.5	135.23	4.9	3.1	2.82	-	6216NR	6216ZNR		72500	53000	14.6	4500	5300	90	130	6216	1.4

* Not a stocked range although available on request.

Every effort has been taken to ensure that the data listed in this catalogue is correct.
Finer Power Transmissions P/L will not accept liability for any damage or loss caused as a result of the data in this catalogue.
Every effort has been taken to ensure that the data listed in this catalogue is correct.
Finer Power Transmissions P/L will not accept liability for any damage or loss caused as a result of the data in this catalogue.

NACHI
Finer Power Transmissions P/L | www.finerpt.com
Deep Groove Ball Bearings
6300 Series

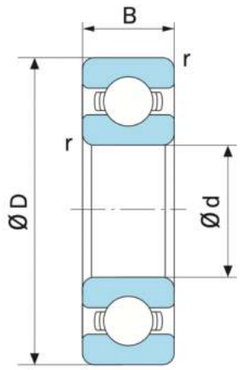

Open

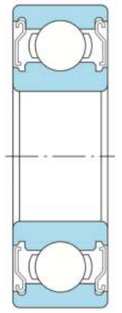

Two shields (ZZE)

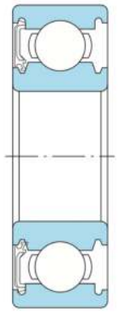

One contact seal (NSE)

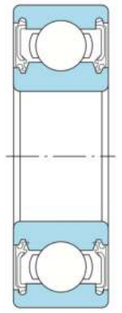

Two contact seals (2NSE)

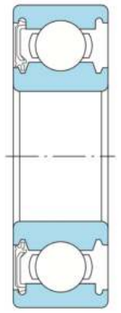

One non-contact seal (NKE)

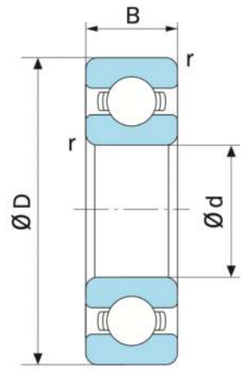

Open

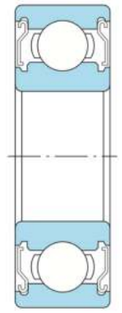

Two shields (ZZE)

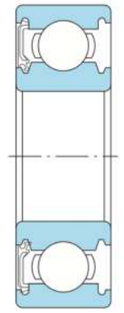

One contact seal (NSE)

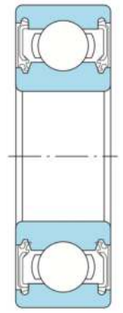

Two contact seals (2NSE)

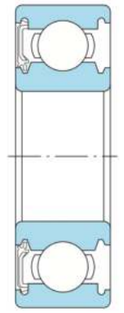

One non-contact seal (NKE)

Boundary dimensions (mm)				Bearing No					Basic dynamic load rating Cr (N)	Basic static load rating Cor (N)	Factor fo	Limiting speed (min-1)			Abutment and fillet dimensions (mm)			Mass (kg)	Bearing No
												Grease lubrication		Oil lubrication					
d	D	B	r (min)	Open type	Shield type	Contact seal type	Non-contact seal type*					Open type, ZE, ZZE,NKE,2NKE	NSE, 2NSE	Open type, ZE	da (min)	Da (max)	ra (max)		
10	35	11	0.6	6300	6300ZZE	6300-2NSE	-		8100	3450	11.3	23000	17000	27000	15	30	0.6	0.053	6300
12	37	12	1	6301	6301ZZE	6301-2NSE	-		9750	4250	11.2	20000	16000	24000	18	31	1.0	0.060	6301
15	42	13	1	6302	6302ZZE	6302-2NSE	-		11400	5400	12.3	17000	13000	21000	21	36	1.0	0.082	6302
17	47	14	1	6303	6303ZZE	6303-2NSE	-		13600	6550	12.3	16000	11000	19000	23	41	1.0	0.115	6303
20	52	15	1.1	6304	6304ZZE	6304-2NSE	6304-2NKE		15900	7900	12.4	14000	10000	17000	27	45	1.1	0.144	6304
25	62	17	1.1	6305	6305ZZE	6305-2NSE	6305-2NKE		23600	12100	12.2	12000	8100	14000	32	55	1	0.232	6305
30	72	19	1.1	6306	6306ZZE	6306-2NSE	6306-2NKE		26700	15000	13.2	10000	6700	12000	37	65	1	0.346	6306
35	80	21	1.5	6307	6307ZZE	6307-2NSE	6307-2NKE		33500	19200	13.2	8800	6000	10000	44	71	1.5	0.457	6307
40	90	23	1.5	6308	6308ZZE	6308-2NSE	6308-2NKE		40500	24100	13.2	7800	5300	9200	49	81	1.5	0.633	6308
45	100	25	1.5	6309	6309ZZE	6309-2NSE	6309-2NKE		53000	32000	13.1	7000	4800	8200	54	91	1.5	0.833	6309
50	110	27	2	6310	6310ZZE	6310-2NSE	6310-2NKE		62000	38000	13.1	6400	4300	7500	60	100	2	1.07	6310
55	120	29	2	6311	6311ZZE	6311-2NSE	6311-2NKE		71500	44500	13.1	5800	4000	6800	65	110	2	1.37	6311
60	130	31	2.1	6312	6312ZZE	6312-2NSE	6312-2NKE		82000	52000	13.2	5400	3600	6300	72	118	2	1.7	6312
65	140	33	2.1	6313	6313ZZE	6313-2NSE	6313-2NKE		92500	59500	13.2	4900	3400	6000	77	128	2	2.08	6313
70	150	35	2.1	6314	6314ZZE	6314-2NSE	6314-2NKE		104000	68000	13.2	4600	3200	5400	82	138	2	2.52	6314
75	160	37	2.1	6315	6315ZZE	6315-2NSE	6315-2NKE		113000	77000	13.2	4300	2900	5000	87	148	2	3.02	6315
80	170	39	2.1	6316	6316ZZ	6316-2NSL	6316NK		123000	86500	13.2	4000	2800	4800	92	158	2	3.59	6316
85	180	41	3	6317	6317ZZ	6317-2NS	6317NK		133000	96500	13.3	3800	2600	4500	99	166	2.5	4.23	6317
90	190	43	3	6318	6318ZZ	6318-2NS	6318NK		143000	107000	13.3	3600	2400	4300	104	176	2.5	4.91	6318
95	200	45	3	6319	6319ZZ	6319-2NS	6319NK		153000	118000	13.3	3300	2400	3900	109	186	2.5	5.67	6319
100	180	34	2.1	6320	6320ZZ	6320-2NS	6320NK		173000	141000	13.2	3200	2200	3700	114	201	2.5	7	6320
110	240	50	3	6322	6322ZZ	-	-		205000	179000	13.1	2900	-	3400	124	226	2.5	9.54	6322

* Not a stocked range although available on request. .

Every effort has been taken to ensure that the data listed in this catalogue is correct.
Finer Power Transmissions P/L will not accept liability for any damage or loss caused as a result of the data in this catalogue.
Every effort has been taken to ensure that the data listed in this catalogue is correct.
Finer Power Transmissions P/L will not accept liability for any damage or loss caused as a result of the data in this catalogue.

Deep Groove Ball Bearings
6300 Series w/ Snap Ring

NACHI
Finer Power Transmissions P/L | www.finerpt.com
Deep Groove Ball Bearings
6300 Series w/ Snap Ring

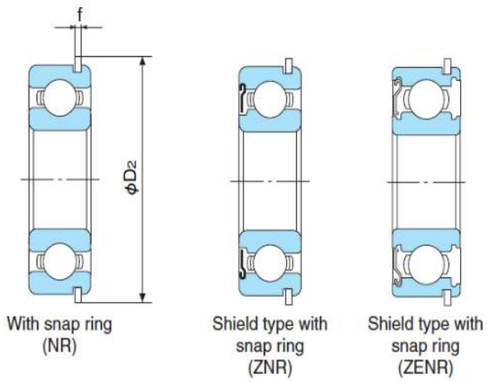

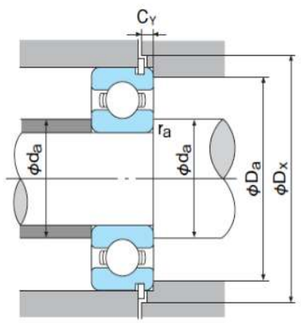

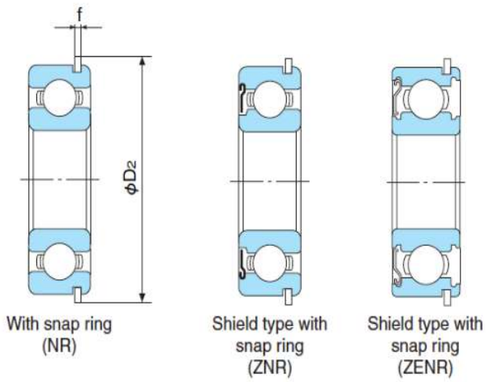

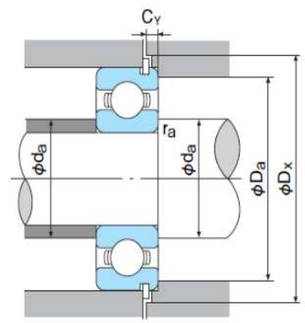

Boundary dimensions (mm)					Dimensions of snap ring groove and snap ring (mm)					Bearing No.				Basic dynamic load rating Cr (N)	Basic static load rating Cor (N)	Factor fo	Limiting speed (min-1)		Abutment and fillet dimensions (mm)		Mass (kg)	Bearing No
d	D	B	r (min)	r1 (min)	D1 (max)	a (max)	b (min)	D2 (max)	f (max)	Contact seal type	Open type*	Shield type					Grease lubrication	Oil lubrication	da (min)	Da (max)		
15	42	13	1	0.5	39.75	2.06	1.35	46.3	1.12	6302-2NSENR	6302NR	6302ZENR		11400	5400	12.3	17000	21000	21	36	0.082	6302
17	47	14	1	0.5	44.6	2.46	1.35	52.7	1.12	6303-2NSENR	6303NR	6303ZENR		13600	6550	12.3	16000	19000	23	41	0.115	6303
20	52	15	1.1	0.5	49.73	2.46	1.35	57.9	1.12	6304-2NSENR	6304NR	6304ZENR		15900	7900	12.4	14000	17000	27	45	0.144	6304
25	62	17	1.1	0.5	59.61	3.28	1.9	67.7	1.7	6305-2NSENR	6305NR	6305ZENR		23600	12100	12.2	12000	14000	32	55	0.232	6305
30	72	19	1.1	0.5	68.81	3.28	1.9	78.6	1.7	6306-2NSENR	6306NR	6306ZENR		26700	15000	13.2	10000	12000	37	65	0.346	6306
35	80	21	1.5	0.5	76.81	3.28	1.9	86.6	1.6	6307-2NSENR	6307NR	6307ZENR		33500	19100	13.2	8800	10000	44	71	0.457	6307
40	90	23	1.5	0.5	86.79	3.28	2.7	96.5	2.46	6308-2NSENR	6308NR	6308ZENR		40500	24100	13.2	7800	9200	49	81	0.633	6308
45	100	25	1.5	0.5	96.8	3.28	2.7	106.5	2.46	6309-2NSENR	6309NR	6309ZENR		53000	32000	13.1	7000	8200	54	91	0.833	6309
50	110	27	2	0.5	106.81	3.28	2.7	116.6	2.46	6310-2NSENR	6310NR	6310ZENR		62000	38100	13.1	6400	7500	60	100	1.07	6310
55	120	29	2	0.5	115.21	4.06	3.1	129.7	2.82	6311-2NSENR	6311NR	6311ZENR		71500	44500	13.1	5800	6800	65	110	1.37	6311
60	130	31	2.1	0.5	125.22	4.06	3.1	139.7	2.82	6312-2NSENR	6312NR	6312ZENR		82000	52000	13.2	5400	6300	72	118	1.7	6312
65	140	33	2.1	0.5	135.23	4.9	3.1	149.7	2.82	6313-2NSENR	6313NR	6313ZENR		92500	59500	13.2	4900	6000	77	128	2.08	6313

Deep Groove Ball Bearings
62/22 & 63/32 Series and Specials

Deep Groove Ball Bearings
62/22 & 63/32 Series and Specials

Boundary dimensions (mm)				Bearing No					Basic dynamic load rating Cr (N)	Basic static load rating Cor (N)	Factor fo	Limiting speed (min-1)			Abutment and fillet dimensions (mm)		Mass (kg)	Bearing No
												Grease lubrication		Oil lubrication				
d	D	B	r (min)	Open type	Shield type	Contact seal type	Non-contact seal type*					Open type, ZE, ZZE,NKE,2NKE	NSE, 2NSE	Open type, ZE	da (min)	Da (max)		
22	56	16	1.1	63/22	63/22ZZE	63/22-2NSE	63/22-2NKE		18400	9250	12.4	13000	9500	16000	29	49	0.176	63/22
28	58	16	1	62/28	62/28ZZE	62/28-2NSE	62/28-2NSE		17900	9750	13.1	12000	8200	14000	34	52	0.175	62/28
28	68	18	1.1	63/28	63/28ZZE	63/28-2NSE	63/28-2NSE		26800	14000	12.4	11000	7500	13000	35	61	0.287	63/28
32	65	17	1	62/32	62/32ZZE	62/32-2NSE	62/32-2NKE		22400	13100	13.6	11000	7100	12000	38	59	0.23	62/32
32	75	20	1.1	63/32	63/32ZZE	63/32-2NSE	63/32-2NKE		30000	16200	12.7	9500	6500	11000	39	68	0.382	63/32

* Not a stocked range although available on request. .

Every effort has been taken to ensure that the data listed in this catalogue is correct.
Finer Power Transmissions P/L will not accept liability for any damage or loss caused as a result of the data in this catalogue.

Every effort has been taken to ensure that the data listed in this catalogue is correct.
Finer Power Transmissions P/L will not accept liability for any damage or loss caused as a result of the data in this catalogue.

NACHI
Finer Power Transmissions P/L | www.finerpt.com
Deep Groove Ball Bearings
6800 (61800) Series

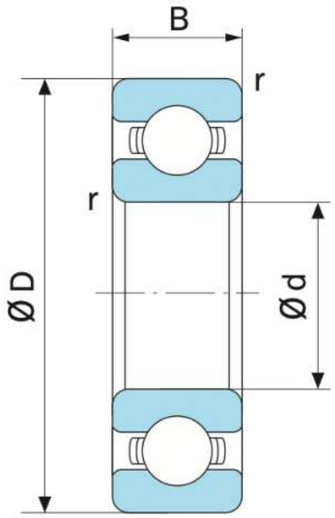

Open

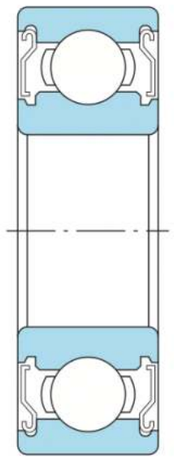

Two shields
(ZZE)

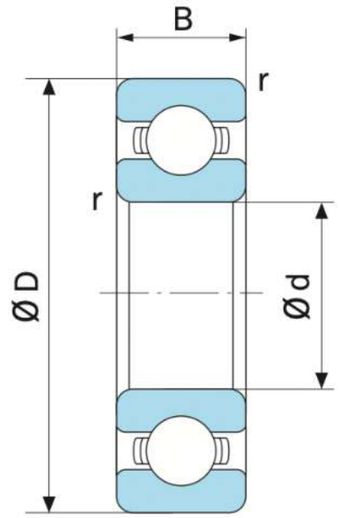

Open

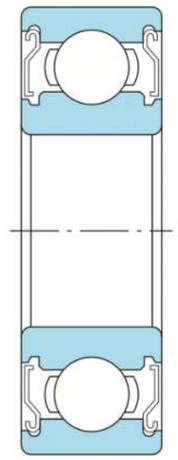

Two shields
(ZZE)

Boundary dimensions (mm)				Bearing No		Basic dynamic load rating Cr (N)	Basic static load rating Cor (N)		Factor fo	Limiting speed (min-1)			Abutment and fillet dimensions (mm)			Mass (kg)	Bearing No
										Grease lubrication		Oil lubrication					
d	D	B	r (min)	Open type*	Shield type					Open type, ZE, ZZE,NKE,2NKE	NSE, 2NSE	Open type, ZE	da (min)	Da (max)	ra (max)		
10	19	5	0.3	6800	6800ZZE	2120	985		14.2	37000	24000	44000	12	17	0.3	0.005	6800
12	21	5	0.3	6801	6801ZZE	1920	1040		15.3	32000	20000	39000	14	19	0.3	0.006	6801
15	24	5	0.3	6802	6802ZZE	2080	1260		15.8	28000	17000	34000	17	22	0.3	0.007	6802
17	26	5	0.3	6803	6803ZZE	2630	1570		16.1	26000	15000	30000	19	24	0.3	0.008	6803
20	32	7	0.3	6804	6804ZZE	4000	2640		15.5	22000	13000	26000	22	30	0.3	0.019	6804
25	37	7	0.3	6805	6805ZZE	4300	2940		16	18000	10000	22000	27	35	0.3	0.022	6805
30	42	7	0.3	6806	6806ZZE	5350	3800		16.4	15000	9000	18000	32	40	0.3	0.026	6806
35	47	7	0.3	6807	6807ZZE	4750	3800		16.4	14000	7600	16000	37	45	0.3	0.029	6807
40	52	7	0.3	6808	6808ZZE	5950	4900		16.2	12000	6700	14000	42	50	0.3	0.033	6808
45	58	7	0.3	6809	6809ZZE	5350	4900		16.1	11000	6000	13000	47	56	0.3	0.04	6809
50	65	7	0.3	6810	6810ZZE	6400	5800		16.1	10000	5300	12000	52	63	0.3	0.052	6810
55	72	9	0.3	6811	6811ZZ	8800	8100		16.2	8700	-	10000	57	70	0.3	0.083	6811
60	78	10	0.3	6812	6812ZZ	11500	10600		16.3	8000	-	9500	62	76	0.3	0.106	6812
65	85	10	0.6	6813	6813ZZ	11900	11500		16.2	7500	-	8700	69	81	0.6	0.125	6813
70	90	10	0.6	6814	6814ZZ	12100	11900		16.1	7000	-	8100	74	86	0.6	0.135	6814
75	95	10	0.6	6815	6815ZZ	12500	12800		16	6500	-	7600	79	91	0.6	0.145	6815
80	100	10	0.6	6816	6816ZZ	12700	13300		15.9	6000	-	7100	84	96	0.6	0.155	6816
85	110	13	1	6817	6817ZZ	18700	19000		16.2	5700	-	6700	90	105	1	0.265	6817
90	115	13	1	6818	6818ZZ	19000	19700		16.1	5400	-	6300	95	110	1	0.28	6818
150	190	20	1.1	6830	-	47500	54500		16.1	3200	-	3800	156	184	1	1.2	6830

* Not a stocked range although available on request. .

Every effort has been taken to ensure that the data listed in this catalogue is correct.
Finer Power Transmissions P/L will not accept liability for any damage or loss caused as a result of the data in this catalogue.
Every effort has been taken to ensure that the data listed in this catalogue is correct.
Finer Power Transmissions P/L will not accept liability for any damage or loss caused as a result of the data in this catalogue.

NACHI
Finer Power Transmissions P/L | www.finerpt.com
Deep Groove Ball Bearings
6900 (61900) Series

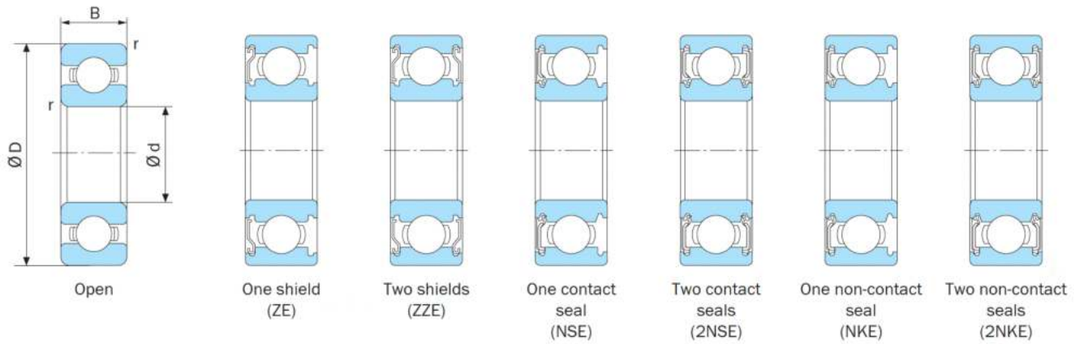

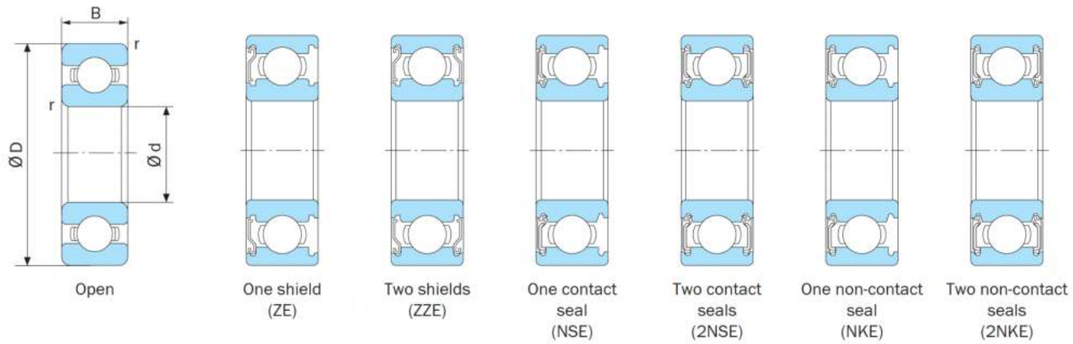

Boundary dimensions (mm)				Bearing No					Basic dynamic load rating Cr (N)	Basic static load rating Cor (N)	Factor fo	Limiting speed (min-1)			Abutment and fillet dimensions (mm)			Mass (kg)	Bearing No
												Grease lubrication		Oil lubrication					
d	D	B	r (min)	Open type*	Shield type	Contact seal type	Non-contact seal type*					Open type, ZE, ZZE,NKE,2NKE	NSE, 2NSE	Open type, ZE	da (min)	Da (max)	ra (max)		
10	22	6	0.3	6900	6900ZZE	6900-2NSE	6900-2NKE		2490	1130	14	33000	22000	38000	12	20	0.3	0.009	6900
12	24	6	0.3	6901	6901ZZE	6901-2NSE	6901-2NKE		2700	1320	14.5	30000	20000	36000	14	22	0.3	0.011	6901
15	28	7	0.3	6902	6902ZZE	6902-2NSE	6902-2NKE		4300	2250	14.3	26000	17000	31000	17	26	0.3	0.016	6902
17	30	7	0.3	6903	6903ZZE	6903-2NSE	6903-2NKE		4600	2550	14.7	24000	15000	29000	19	28	0.3	0.018	6903
20	37	9	0.3	6904	6904ZZE	6904-2NSE	6904-2NKE		6350	3700	14.8	19000	12000	23000	22	35	0.3	0.036	6904
25	42	9	0.3	6905	6905ZZE	6905-2NSE	6905-2NKE		7000	4500	15.3	16000	10000	20000	27	40	0.3	0.042	6905
30	47	9	0.3	6906	6906ZZE	6906-2NSE	6906-2NKE		7250	5000	15.8	14000	8500	17000	32	45	0.3	0.045	6906
35	55	10	0.6	6907	6907ZZE	6907-2NSE	6907-2NKE		10400	7150	15.6	12000	7500	15000	39	51	0.6	0.073	6907
40	62	12	0.6	6908	6908ZZE	6908-2NSE	6908-2NKE		13700	9950	15.8	11000	6300	13000	44	58	0.6	0.108	6908
45	68	12	0.6	6909	6909ZZE	6909-2NSE	6909-2NKE		14100	10900	16.1	10000	5600	12000	49	64	0.6	0.122	6909
50	72	12	0.6	6910	6910ZZE	6910-2NSE	6910-2NKE		14500	11700	16.1	9500	5300	11000	54	68	0.6	0.125	6910
65	90	13	1	6913	6913ZZ	-	-		17400	16000	16.5	7100	-	8500	70	85	1	0.2	6913
70	100	16	1	6914	6914ZZ	-	-		23700	21100	16.3	6500	-	7700	75	95	1	0.327	6914
80	110	16	1	6916	6916ZZ	-	-		27600	25300	16.4	5700	-	6700	85	105	1	0.363	6916

* Not a stocked range although available on request. .

Every effort has been taken to ensure that the data listed in this catalogue is correct.
Finer Power Transmissions P/L will not accept liability for any damage or loss caused as a result of the data in this catalogue.
Every effort has been taken to ensure that the data listed in this catalogue is correct.
Finer Power Transmissions P/L will not accept liability for any damage or loss caused as a result of the data in this catalogue.

NACHI
Finer Power Transmissions P/L | www.finerpt.com
Deep Groove Ball Bearings
16000 Series

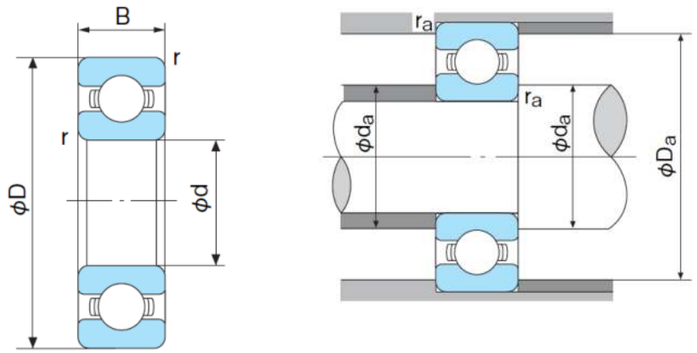

Open

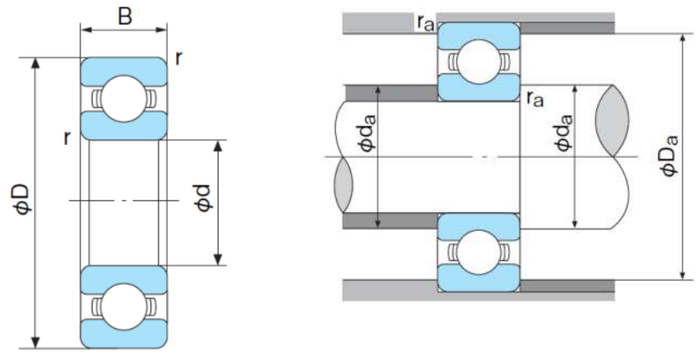

Open

Boundary dimensions (mm)				Bearing No		Basic dynamic load rating Cr (N)	Basic static load rating Cor (N)	Factor fo	Limiting speed (min-1)		Abutment and fillet dimensions (mm)			Mass (kg)
									Grease lubrication	Oil lubrication				
d	D	B	r (min)	Open type					Open type	Open type	da (min)	Da (max)	ra (max)	
17	35	8	0.3	16003		6000	3250	14.3	22000	26000	22	30	0.3	0.032
20	42	8	0.3	16004		7900	4500	14.5	18000	21000	25	37	0.3	0.05
25	47	8	0.3	16005		6950	4600	15.6	15000	18000	30	42	0.3	0.06
30	55	9	0.3	16006		9950	6550	15.4	13000	15000	35	50	0.3	0.085
35	62	9	0.3	16007		11700	8150	15.6	12000	14000	40	57	0.6	0.11
40	68	9	0.3	16008		11100	8550	16.1	10000	12000	45	63	0.3	0.125
45	75	10	0.6	16009		12900	10500	16.2	9200	11000	52	68	0.6	0.17
50	80	10	0.6	16010		16100	13100	16.1	8500	10000	57	73	0.6	0.18
55	90	11	0.6	16011		15200	13500	16.5	7700	9000	62	83	0.6	0.26
60	95	11	0.6	16012		16200	14300	16.5	7100	8500	67	88	0.6	0.28
65	100	11	0.6	16013		20500	18600	16.4	6700	8000	72	93	0.6	0.3
70	110	13	0.6	16014		26800	23600	16.2	6100	7100	77	103	0.6	0.433
75	115	13	0.6	16015		27600	25300	16.4	5700	6700	82	108	0.6	0.457
80	125	14	0.6	16016		32000	29600	16.4	5300	6300	87	118	0.6	0.597
85	130	14	0.6	16017		31500	29800	16.4	5000	6000	92	123	0.6	0.626

Every effort has been taken to ensure that the data listed in this catalogue is correct.
Finer Power Transmissions P/L will not accept liability for any damage or loss caused as a result of the data in this catalogue.
Every effort has been taken to ensure that the data listed in this catalogue is correct.
Finer Power Transmissions P/L will not accept liability for any damage or loss caused as a result of the data in this catalogue.

NACHI
Finer Power Transmissions P/L | www.finerpt.com
Tapered Roller Bearings
30200 Series

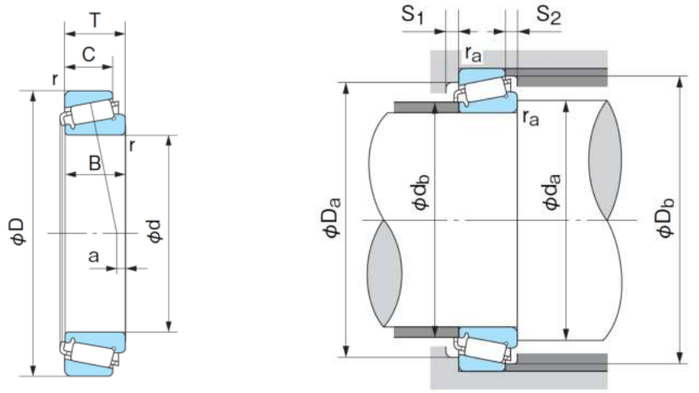

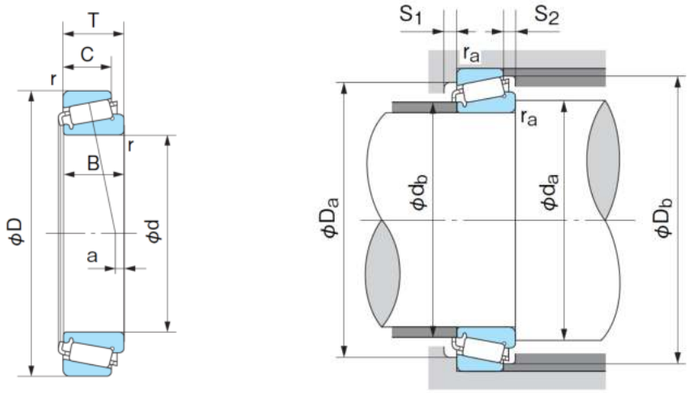

Boundary dimensions (mm)							Bearing No	(Ref.) ISO355 Dimension series	Basic dynamic load rating Cr (N)	Basic static load rating Cor (N	Limiting speed (min-1)			Abutment and fillet dimensions (mm)								Load center (mm) a (1)	Constant e	Axial load factor		Mass(kg) Reference	Bearing No
d	D	T	B	C	Cone	Cup					Grease lubrication	Oil lubrication		da (min)	db (max)	Da (min)	Db (min)	S1 (min	S2 (min)	Cone	Cup			Y1	Y0		
					r (min)															ra (max)							
15	35	11.75	11	10	0.6	0.6	E30202J		15800	14500	12000	16000		19.5	20	29	33	2	1.7	0.6	0.6	3.4	0.32	1.88	1.04	0.054	E30202J
17	40	13.25	12	11	1	1	E30203J	2DB	20800	20700	10000	14000		22.5	23	33	37	2	2	1	1	3.2	0.35	1.74	0.96	0.081	E30203J
20	47	15.25	14	12	1	1	E30204J	2DB	27000	27200	8700	12000		25.5	27	39	44	2	3	1	1	3.5	0.35	1.74	0.95	0.127	E30204J
25	52	16.25	15	13	1	1	E30205J	3CC	31500	33700	7500	10000		30.5	31	44	48	2	3	1	1	3.3	0.37	1.60	0.88	0.156	E30205J
30	62	17.25	16	14	1	1	E30206J	3DB	41500	44800	6500	8700		35.5	37	53	57	2	3	1	1	3.1	0.37	1.60	0.88	0.236	E30206J
35	72	18.25	17	15	1.5	1.5	E30207J	3DB	55100	60900	5600	7400		43.5	44	62	67	3	3	1.5	1.5	2.9	0.37	1.60	0.88	0.344	E30207J
40	80	19.75	18	16	1.5	1.5	E30208J	3DB	62900	69200	5000	6700		48.5	49	69	75	3	3.5	1.5	1.5	2.7	0.37	1.60	0.88	0.434	E30208J
45	85	20.75	19	16	1.5	1.5	E30209J	3DB	67200	77400	4600	6100		53.5	54	74	80	3	4.5	1.5	1.5	1.8	0.40	1.48	0.81	0.502	E30209J
50	90	21.75	20	17	1.5	1.5	E30210J	3DB	76500	91700	4300	5700		58.5	58	79	85	3	4.5	1.5	1.5	1.65	0.42	1.43	0.79	0.566	E30210J
55	100	22.75	21	18	2	1.5	E30211J	3DB	94600	113000	3900	5200		65	64	88	94	4	4.5	2	1.5	2	0.40	1.48	0.81	0.732	E30211J
60	110	23.75	22	19	2	1.5	E30212J	3EB	106000	127000	3500	4700		70	70	96	103	4	4.5	2	1.5	1.8	0.40	1.48	0.81	0.945	E30212J
65	120	24.75	23	20	2	1.5	E30213J	3EB	128000	156000	3200	4300		75	77	106	113	4	4.5	2	1.5	0.6	0.40	1.48	0.81	1.18	E30213J
70	125	26.25	24	21	2	1.5	E30214J	3EB	138000	173000	3100	4100		80	81	110	118	4	5	2	1.5	0.3	0.42	1.43	0.79	1.32	E30214J
75	130	27.25	25	25	2	1.5	E30215J	4DB	142000	181000	2900	3900		85	86	115	124	4	5	2	1.5	−0.3	0.44	1.38	0.76	1.42	E30215J
80	140	28.25	26	22	2.5	2	E30216J	3EB	161000	202000	2700	3600		92	91	124	132	4	6	2	2	−0.3	0.42	1.43	0.79	1.72	E30216J
85	150	30.5	28	24	2.5	2	E30217J	3EB	182000	231000	2500	3400		97	97	132	141	5	6.5	2	2	0.1	0.42	1.43	0.79	2.17	E30217J
90	160	32.5	30	26	2.5	2	E30218J	3FB	204000	261000	2400	3200		102	103	140	150	5	6.5	2	2	−0.1	0.42	1.43	0.79	2.65	E30218J
95	170	34.5	32	27	3	2.5	E30219J	3FB	231000	299000	2200	3000		109	110	149	159	5	7.5	2.5	2	−0.4	0.42	1.43	0.79	3.20	E30219J
100	180	37	34	29	3	2.5	E30220J	3FB	258000	338000	2100	2800		114	116	157	168	5	8	2.5	2	0.2	0.42	1.43	0.79	3.83	E30220J
105	190	39	36	30	3	2.5	E30221J		288000	380000	2000	2600		119	122	165	178	6	9	2.5	2	0.0	0.42	1.43	0.79	4.49	E30211L
110	200	41	38	32	3	2.5	E30222J	3FB	324000	343000	1900	2500		124	129	174	188	6	9	2.5	2	0.2	0.42	1.43	0.79	5.33	E30222J
120	215	43.5	40	34	3	2.5	E30224J	4FE	347000	473000	1700	2300		134	140	187	203	6	9.5	2.5	2	-0.7	0.44	1.38	0.76	6.36	E30224J
130	230	43.75	40	34	4	3	E30226J	4FB	377000	511000	1600	2100		148	152	203	218	7	9.5	3	2.5	-2.7	0.44	1.38	0.76	7.24	E30226J
140	250	45.75	42	36	4	3	E30228J	-	405000	538000	1500	1900		158	163	219	237	9	9.5	3	2.5	-3.4	0.43	1.39	0.77	8.9	E30228J
150	270	49	45	38	4	3	E30230J	-	466000	625000	1300	1800		168	175	234	255	9	11	3	2.5	-2.7	0.43	1.39	0.77	10.9	E30230

Every effort has been taken to ensure that the data listed in this catalogue is correct.
Finer Power Transmissions P/L will not accept liability for any damage or loss caused as a result of the data in this catalogue.
Every effort has been taken to ensure that the data listed in this catalogue is correct.
Finer Power Transmissions P/L will not accept liability for any damage or loss caused as a result of the data in this catalogue.

NACHI
Finer Power Transmissions P/L | www.finerpt.com

NACHI
Finer Power Transmissions P/L | www.finerpt.com

Tapered Roller Bearings
30300 Series

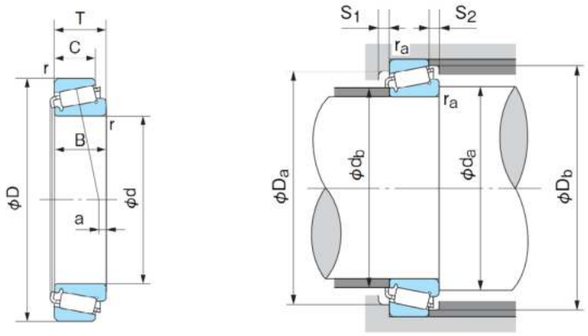

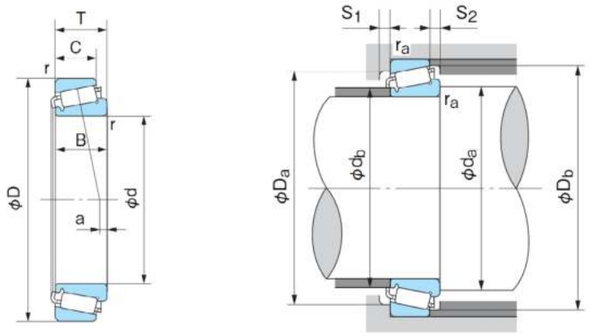

Boundary dimensions (mm)							Bearing No	(Ref.) ISO355 Dimension series	Basic dynamic load rating Cr (N)	Basic static load rating Cor (N	Limiting speed (min-1)			Abutment and fillet dimensions (mm)								Load center (mm) a (1)	Constant e	Axial load factor		Mass(kg) Reference	Bearing No
d	D	T	B	C	Cone	Cup					Grease lubrication	Oil lubrication		da (min)	db (max)	Da (min)	Db (min)	S1 (min	S2 (min)	Cone	Cup				Y1	Y0		
					r (min)															ra (max)								
15	42	14.25	13	11	1	1	E30302J	2FB	21900	19200	10000	14000		20.5	22	36.5	38	2	3	1	1	4.3	0.29	2.11	1.16	0.098	E30302J
17	47	15.25	14	12	1	1	E30303J	2FB	27400	24500	9200	12000		22.5	25	40	42	2	3	1	1	4.3	0.29	2.11	1.16	0.133	E30303J
20	52	16.25	16	13	1.5	1.5	E30304DJ	-	-	-	-	-		-	-	-	-	-	-	-	-	-	-	-	-	-	E30304DJ
20	52	16.25	16	13	1.5	1.5	E30304J	-	36400	35200	8300	11000		28.5	28	44	47	2	3	1.5	1.5	3.0	0.30	2.00	1.10	0.179	E30304J
25	62	18.25	17	13	1.5	1.5	E30305DJ	7FB	39800	42500	5700	8000		33.5	34	47	58.5	3	5	1.5	1.5	-2.2	0.83	0.73	0.40	0.269	E30305DJ
25	62	18.25	17	15	1.5	1.5	E30305J	2FB	48200	46900	6800	9000		33.5	34	54	57	2	3	1.5	1.5	5.4	0.30	2.00	1.10	0.273	E30305J
30	72	20.75	19	14	1.5	1.5	E30306DJ	7FB	50900	54900	4900	6800		38.5	40	55	68	3	6.5	1.5	1.5	-2.9	0.83	0.73	0.04	0.400	E30306DJ
30	72	20.75	19	16	1.5	1.5	E30306J	2FB	59600	60100	5800	7700		38.5	40	62	66	3	4.5	1.5	1.5	5.1	0.31	1.90	1.05	0.411	E30306J
35	80	22.75	21	15	2	1.5	E30307DJ	7FB	63100	69100	4300	6000		45	44	66	76.5	3	7.5	2	1.5	-4.1	0.83	0.73	0.40	0.536	E30307DJ
35	80	22.75	21	18	2	1.5	E30307J	2FB	76200	78900	5200	6900		45	45	70	74	3	4.5	2	1.5	5.8	0.31	1.90	1.05	0.527	E30307J
40	90	25.25	23	17	2	1.5	E30308DJ	7FB	80500	90200	3800	5300		50	51	71	86	3	8	2	1.5	−4.6	0.83	0.73	0.40	0.757	E30308DJ
40	90	25.25	23	20	2	1.5	E30308J	2FB	90600	101000	4500	6100		50	52	77	82	3	5	2	1.5	5.4	0.35	1.74	0.96	0.757	E30308J
45	100	27.25	25	18	2	1.5	E30309DJ	7FB	95100	107000	3400	4700		55	56	79	96	3	9	2	1.5	−5.7	0.83	0.73	0.40	0.973	E30309DJ
45	100	27.25	25	22	2	1.5	E30309J	2FB	113000	128000	4100	5400		55	59	86	93	3	5	2	1.5	5.9	0.35	1.74	0.96	1.01	E30309J
50	110	29.25	27	19	2.5	2	E30310DJ	7FB	115000	133000	3100	4300		62	62	87	105	3	10	2	2	−5.8	0.83	0.73	0.40	1.25	E30310DJ
50	110	29.25	27	19	2.5	2	E30310J	7FB	115000	133000	3100	4300		62	62	87	105	3	10	2	2	−5.8	0.83	0.73	0.40	1.25	E30310DJ
55	120	31.5	29	21	2.5	2	E30311DJ	7FB	129000	148000	2900	4000		67	68	94	113	4	10.5	2	2	−6.9	0.83	0.73	0.40	1.59	E30311DJ
55	120	31.5	29	25	2.5	2	E30311J	2FB	149000	170000	3300	4500		67	71	104	111	4	6.5	2	2	6.0	0.35	1.74	0.96	1.65	E30311J
60	130	33.5	31	22	3	2.5	E30312DJ	7FB	153000	179000	2600	3700		74	73	103	124	4	11.5	2.5	2	−7.3	0.83	0.73	0.40	2.01	E30312DJ
60	130	33.5	31	26	3	2.5	E30312J	2FB	173000	201000	3100	4100		74	77	112	120	4	7.5	2.5	2	6.6	0.35	1.74	0.96	2.08	E30312J
65	140	36	33	23	3	2.5	E30313DJ	7GB	176000	209000	2400	3400		79	79	111	133	4	13	2.5	2	−8.3	0.83	0.73	0.40	2.44	E30313DJ
65	140	36	33	28	3	2.5	E30313J	2GB	204000	239000	2800	3800		79	83	122	130	4	8	2.5	2	6.7	0.35	1.74	0.96	2.56	E30313J
70	150	38	35	25	3	2.5	E30314DJ	7GB	197000	235000	2300	3200		84	84	118	142	4	13	2.5	2	−9.1	0.83	0.73	0.40	2.97	E30314DJ
70	150	38	35	30	3	2.5	E30314J	2GB	230000	273000	2600	3500		84	89	130	140	4	8	2.5	2	7.5	0.35	1.74	0.96	3.08	E30314J
75	160	40	37	26	3	2.5	E30315D	-	222000	266000	2100	2900		89	91	127	151	6	14	2.5	2	−8.8	0.81	0.74	0.41	3.47	E30315D
75	160	40	37	31	3	2.5	E30315J	2GB	250000	297000	2500	3300		89	95	139	149	4	9	2.5	2	8.1	0.35	1.73	0.95	3.52	E30315J
80	170	42.5	39	27	3	2.5	E30316DJ	7GB	236000	282000	2000	2800		94	97	134	159	6	15.5	2.5	2	−11.0	0.83	0.73	0.40	4.12	E30316DJ
80	170	42.5	39	33	3	2.5	E30316J	2GB	294000	294000	2300	3100		94	102	148	159	4	9.5	2.5	2	7.7	0.35	1.73	0.96	4.46	E30316J
85	180	44.5	41	34	4	3	E30317J	-	305000	367000	2200	2900		103	107	156	167	5	10.5	3	2.5	8.7	0.35	1.73	0.95	4.97	E30317J
90	190	46.5	43	30	4	3	E30318DJ	-	282000	336000	1700	2400		108	109	151	179	6	16.5	3	2.5	−12.6	0.81	0.74	0.41	5.60	E30318DJ
95	200	49.5	45	32	4	3	E30319DJ	-	319000	391000	1700	2300		113	113	157	187	6	17.5	3	2.5	-13.2	0.81	0.73	0.40	6.68	E30319DJ
95	200	49.5	45	32	4	3	30319	-	317000	368000	2000	2600		113	118	172	186	5	11.5	3	2.5	9.7	0.35	1.73	0.95	6.32	30319
100	215	51.5	47	34	4	3	E30320D	-	318000	374000	1500	2100		118	121	183	204	5	17	3	2.5	-14.4	0.81	0.74	0.41	8.02	30320D
100	215	51.5	47	39	4	3	30320	-	344000	400000	1800	2400		118	127	184	200	6	12.5	3	2.5	10.1	0.35	1.73	0.95	7.76	30320
110	240	54.5	50	42	4	3	E30322J	-	481000	590000	1600	2100		128	141	206	222	8	12.5	3	2.5	8.2	0.35	1.74	0.96	11.4	E30322J

Every effort has been taken to ensure that the data listed in this catalogue is correct.
Finer Power Transmissions P/L will not accept liability for any damage or loss caused as a result of the data in this catalogue.

Every effort has been taken to ensure that the data listed in this catalogue is correct.
Finer Power Transmissions P/L will not accept liability for any damage or loss caused as a result of the data in this catalogue.

NACHI
Finer Power Transmissions P/L | www.finerpt.com

NACHI
Finer Power Transmissions P/L | www.finerpt.com

Tapered Roller Bearings
32000 Series

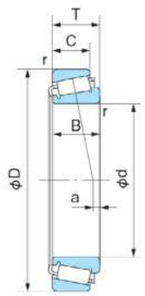

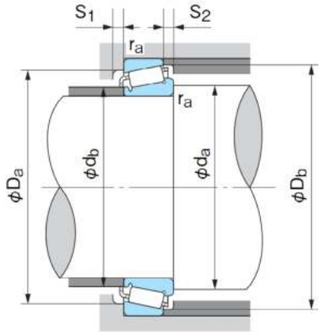

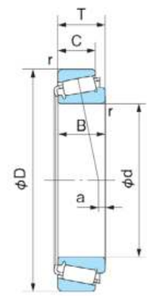

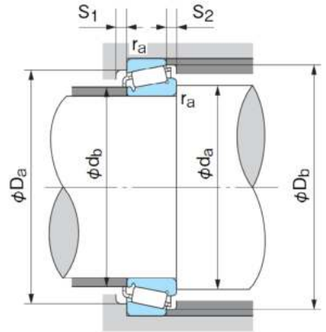

Boundary dimensions (mm)							Bearing No	(Ref.) ISO355 Dimension series	Basic dynamic load rating Cr (N)	Basic static load rating Cor (N	Limiting speed (min-1)			Abutment and fillet dimensions (mm)								Load center (mm) a (1)	Constant e	Axial load factor		Mass(kg) Reference	Bearing No
d	D	T	B	C	Cone r (min)	Cup r (min)					Grease lubrication	Oil lubrication		da (min)	db (max)	Da (min)	Db (min)	S1 (min	S2 (min)	Cone ra (max)	Cup ra (max)			Y1	Y0		
20	42	15	15	12	0.6	0.6	E32004J	3CC	27300	31500	9300	13000		24.5	25	35	39	3	3	0.6	0.6	4.5	0.37	1.6	0.88	0.102	E32004J
25	47	15	15	11.5	0.6	0.6	E32005J	4CC	30200	37700	8300	11000		29.5	30	40	44	3	3.5	0.6	0.6	3.2	0.43	1.39	0.77	0.118	E32005J
26	47	15	15	11.5	0.6	0.6	E32005JS	4CC	30200	37700	8300	11000		29.5	30	40	44	3	3.5	0.6	0.6	3.2	0.43	1.39	0.77	0.118	E32005JS
30	55	17	17	13	1	1	E32006J	4CC	38200	48000	7000	9400		35.5	35	47	52	3	4	1	1	3.4	0.43	1.39	0.77	0.177	E32006J
35	62	18	18	14	1	1	E32007J	4CC	45500	59400	6200	8200		40.5	40	54	59	4	4	1	1	2.9	0.45	1.32	0.73	0.231	E32007J
40	68	19	19	14.5	1	1	E32008J	3CD	53500	71400	5600	7400		45.5	46	60	65	4	4.5	1	1	3.9	0.38	1.58	0.87	0.282	E32008J
45	75	20	20	15.5	1	1	E32009J	3CC	62800	86500	5000	6600		50.5	51	67	72	4	4.5	1	1	3.5	0.39	1.53	0.84	0.354	E32009J
50	80	20	20	15.5	1	1	E32010J	3CC	65700	94500	4600	6100		55.5	56	72	77	4	4.5	1	1	2.3	0.42	1.42	0.78	0.389	E32010J
50	80	20	20	15.5	-	-	E32010JA1*	3CC	65700	94500	4600	6100		-	-	-	-	-	-	-	-	2.3	0.42	1.42	0.78	0.389	E32010JA1
55	90	23	23	17.5	1.5	1.5	E32011J	3CC	84600	121000	4100	5500		63.5	63	81	86	4	5.5	1.5	1.5	3.2	0.41	1.48	0.81	0.569	E32011J
60	95	23	23	17.5	1.5	1.5	E32012J	4CC	86100	127000	3900	5200		68.5	67	85	91	4	5.5	1.5	1.5	2	0.43	1.39	0.77	0.621	E32012J
65	100	23	23	17.5	1.5	1.5	E32013J	4CC	90000	137000	3600	4800		73.5	72	90	97	4	5.5	1.5	1.5	0.5	0.46	1.31	0.72	0.664	E32013J
70	110	25	25	19	1.5	1.5	E32014J	4CC	108000	163000	3300	4400		78.5	78	98	105	5	6	1.5	1.5	1.4	0.43	1.38	0.76	0.884	E32014J
75	115	25	25	19	1.5	1.5	E32015J	4CC	110000	169000	3100	4200		83.5	83	103	110	5	6	1.5	1.5	−0.1	0.46	1.31	0.72	0.93	E32015J
80	125	29	29	22	1.5	1.5	E32016J	3CC	147000	225000	2900	3900		88.5	89	112	120	6	7	1.5	1.5	2.3	0.42	1.42	0.78	1.32	E32016J
85	130	29	29	22	1.5	1.5	E32017J	4CC	150000	234000	2800	3700		93.5	94	117	125	6	7	1.5	1.5	1	0.44	1.36	0.75	1.38	E32017J
90	140	32	32	24	2	1.5	E32018J	3CC	178000	276000	2600	3500		100	100	125	134	6	8	2	1.5	2.2	0.42	1.42	0.78	1.8	E32018J
95	145	32	32	24	2	1.5	E32019J	4CC	182000	287000	2500	3300		105	105	130	140	6	8	2	1.5	0.8	0.44	1.36	0.75	1.88	E32019J
100	150	32	32	24	2	1.5	E32020J	4CC	185000	298000	2400	3200		110	109	134	144	6	8	2	1.5	−0.6	0.46	1.31	0.72	1.95	E32020J
105	160	35	35	26	2.5	2	E32021J	4DC	215000	344000	2200	3000		117	116	143	154	6	9	2	2	0.5	0.44	1.35	0.74	2.45	E32021J
110	170	38	38	29	2.5	2	E32022J	4DC	248000	395000	2100	2800		122	122	152	163	7	9	2	2	1.9	0.43	1.39	0.77	3.12	E32022J
120	180	38	38	29	2.5	2	E32024J	4DC	258000	427000	2000	2600		132	131	161	173	7	9	2	2	−0.8	0.46	1.31	0.72	3.34	E32024J
130	200	45	45	34	2.5	2	E32026J	4EC	340000	563000	1800	2300		142	144	178	192	8	11	2	2	2.1	0.43	1.38	0.76	5.04	E32026J
140	210	45	45	34	2.5	2	E32028J	4DC	346000	585000	1700	2200		152	153	187	202	8	11	2	2	−0.6	0.46	1.31	0.72	5.28	E32028J
150	225	48	48	36	2.5	2	E32030J	4EC	391000	668000	1500	2000		164	164	200	216	8	12	2.5	2	-0.8	0.46	1.31	0.72	6.41	E32030J
160	240	51	51	38	3	2.5	E32032J	4EC	440000	758000	1400	1900		174	175	213	231	8	13	2.5	2	-1.1	0.46	1.31	0.72	7.75	E32032J
170	260	57	57	43	3	2.5	E32034J	4EC	526000	905000	1300	1700		184	187	230	249	10	14	2.5	2	1.2	0.44	1.35	0.74	10.5	E32034J
180	280	64	64	48	3	2.5	E32036J	4EC	644000	1100000	1200	1600		194	199	247	268	10	16	2.5	2	4.5	0..42	1.42	0.78	14.1	E32036J
190	290	64	64	48	3	2.5	E32038J	4FD	654000	1170000	1100	1500		204	209	257	279	10	16	2.5	2	1.1	0.44	1.36	0.75	14.7	E32038J

* Tapered Roller (Automotive).

Every effort has been taken to ensure that the data listed in this catalogue is correct.
Finer Power Transmissions P/L will not accept liability for any damage or loss caused as a result of the data in this catalogue.

Every effort has been taken to ensure that the data listed in this catalogue is correct.
Finer Power Transmissions P/L will not accept liability for any damage or loss caused as a result of the data in this catalogue.

NACHI
Finer Power Transmissions P/L | www.finerpt.com

NACHI
Finer Power Transmissions P/L | www.finerpt.com

Tapered Roller Bearings
32200 Series

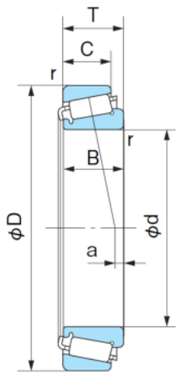

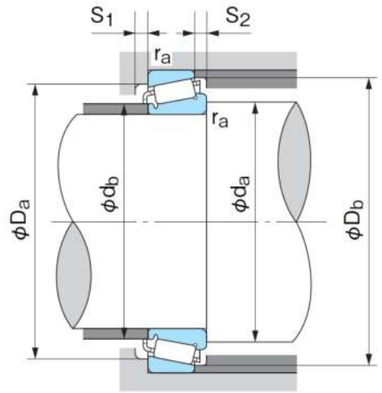

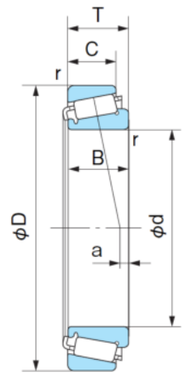

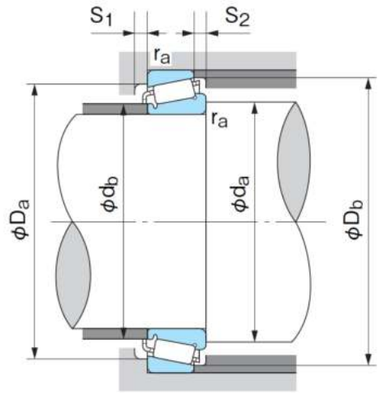

Boundary dimensions (mm)							Bearing No.	(Ref.) ISO355 Dimension series	Basic dynamic load rating Cr (N)	Basic static load rating Cor (N	Limiting speed (min-1)			Abutment and fillet dimensions (mm)								Load center (mm) a (1)	Constant e	Axial load factor		Mass(kg) Reference	Bearing No.
d	D	T	B	C	Cone r (min)	Cup r (min)					Grease lubrication	Oil lubrication		da (min)	db (max)	Da (min)	Db (min)	S1 (min)	S2 (min)	Cone ra (max)	Cup ra (max)			Y1	Y0		
20	47	19.25	18	15	1	1	E32204J	2DD	32500	34800	8700	12000		25.5	27	39	43	2	4	1	1	6.2	0.35	1.73	0.95	0.156	E32204J
25	52	19.25	18	16	1	1	E32205J	2CD	39800	44800	7900	11000		30.5	31	43	48	2	4	1	1	5.7	0.36	1.67	0.92	0.188	E32205J
30	62	21.25	20	17	1	1	E32206J	3DC	50700	57900	6500	8700		35.5	37	52	58	2	4	1	1	5.3	0.37	1.60	0.88	0.292	E32206J
35	72	24.25	23	19	1.5	1.5	E32207J	3DC	69600	82400	5600	7500		43.5	43	61	67	3	5	1.5	1.5	6.0	0.37	1.60	0.88	0.453	E32207J
40	80	24.75	23	19	1.5	1.5	E32208J	3DC	77700	90800	5000	6600		48.5	48	68	75	3	5.5	1.5	1.5	5.3	0.37	1.60	0.88	0.554	E32208J
45	85	24.75	23	19	1.5	1.5	E32209J	3DC	78300	94100	4600	6100		53.5	53	73	81	3	5.5	1.5	1.5	3.8	0.40	1.48	0.81	0.587	E32209J
50	90	24.75	23	19	1.5	1.5	E32210J	3DC	85000	105000	4300	5700		58.5	58	78	85	3	5.5	1.5	1.5	4.1	0.42	1.43	0.79	0.643	E32210J
55	100	26.75	25	21	2	1.5	E32211J	3DC	107000	133000	3900	5200		65	63	87	95	4	5.5	2	1.5	3.7	0.40	1.48	0.81	0.863	E32211J
60	110	29.75	28	24	2	1.5	E32212J	3EC	132000	167000	3500	4700		70	69	95	104	4	5.5	2	1.5	4.6	0.40	1.48	0.81	1.19	E32212J
65	120	32.75	31	27	2	1.5	E32213J	3EC	157000	203000	3200	4300		75	76	104	115	4	5.5	2	1.5	6.1	0.40	1.48	0.82	1.58	E32213J
70	125	33.25	31	27	2	1.5	E32214J	3EC	169000	225000	3100	4100		80	80	108	119	4	6	2	1.5	4.0	0.42	1.43	0.79	1.71	E32214J
75	130	33.25	31	27	2	1.5	E32215J	4DC	174000	234000	2900	3900		85	85	114	123	4	6	2	1.5	3.0	0.44	1.38	0.76	1.77	E32215J
80	140	35.25	33	28	2.5	2	E32216J	3EC	203000	271000	2700	3600		92	90	122	134	4	7	2	2	3.8	0.42	1.43	0.79	2.17	E32216J
85	150	38.5	36	30	2.5	2	E32217J	3EC	232000	315000	2500	3300		97	96	130	142	5	8.5	2	2	4.3	0.42	1.43	0.79	2.8	E32217J
90	160	42.5	40	34	2.5	2	E32218J	3FC	263000	362000	2400	3200		102	102	138	152	5	8.5	2	2	5.5	0.42	1.43	0.79	3.47	E32218J
95	170	45.5	43	37	3	2.5	E32219J	3FC	311000	439000	2200	3000		109	108	145	161	5	8.5	2.5	2	6.6	0.42	1.43	0.79	4.34	E32219J
100	180	49	46	39	3	2.5	E32220J	3FC	347000	495000	2100	2800		114	114	154	171	5	10	2.5	2	6.9	0.42	1.43	0.79	5.21	E32220J
105	190	53	50	43	3	2.5	E32221J	3FC	392000	567000	2000	2700		119	120	161	180	6	10	2.5	2	8.2	0.42	1.43	0.79	6.37	E32221J
110	200	56	53	46	3	2.5	E32222J	3FC	438000	640000	1900	2500		124	126	170	190	6	10	2.5	2	9.3	0.42	1.43	0.79	7.45	E32222J
120	215	61.5	58	50	3	2.5	E32224J	4FD	470000	691000	1700	2300		134	136	181	204	7	11.5	2.5	2	9.9	0.44	1.38	0.76	9.04	E32224J
130	230	67.75	64	54	4	3	E32226J	4FD	554000	830000	1600	2200		148	146	193	219	7	13.5	3	2.5	11.7	0.44	1.38	0.76	11.5	E32226J
140	250	71.75	68	58	4	3	E32228J	4FD	636000	961000	1500	2000		158	158	210	238	9	13.5	3	2.5	11.7	0.44	1.39	0.76	14.7	E32228J
150	270	77	73	60	4	3	E32230J	4GD	704000	1070000	1300	1800		168	170	226	254	8	17	3	2.5	11.8	0.44	1.38	0.76	18.2	E32230J
160	290	84	80	67	4	3	E32232J	4GD	795000	1210000	1200	1700		178	182	242	274	10	17	3	2.5	13.7	0.44	1.38	0.76	23.2	E32232J

Every effort has been taken to ensure that the data listed in this catalogue is correct.
Finer Power Transmissions P/L will not accept liability for any damage or loss caused as a result of the data in this catalogue.

Every effort has been taken to ensure that the data listed in this catalogue is correct.
Finer Power Transmissions P/L will not accept liability for any damage or loss caused as a result of the data in this catalogue.

NACHI
Finer Power Transmissions P/L | www.finerpt.com
Tapered Roller Bearings
32300 Series

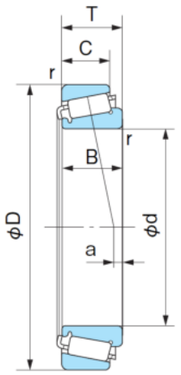

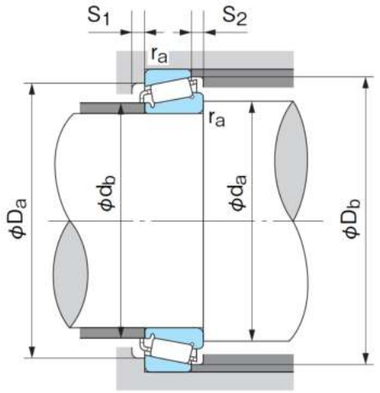

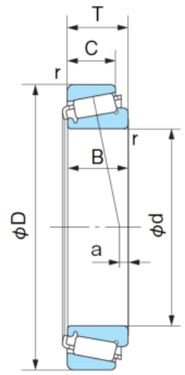

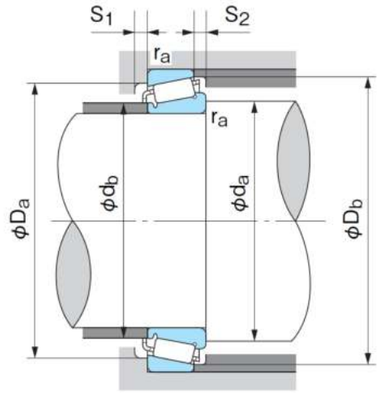

Boundary dimensions (mm)							Bearing No.	(Ref.) ISO355 Dimension series	Basic dynamic load rating Cr (N)	Basic static load rating Cor (N	Limiting speed (min-1)			Abutment and fillet dimensions (mm)								Load center (mm) a (1)	Constant e	Axial load factor		Mass(kg) Reference	Bearing No.
d	D	T	B	C	Cone	Cup					Grease lubrication	Oil lubrication		da (min)	db (max)	Da (min)	Db (min)	S1 (min)	S2 (min)	Cone	Cup			Y1	Y0		
					r (min)															ra (max)							
20	52	22.25	21	18	1.5	1.5	E32304J	2FD	45100	46700	8400	11000		28.5	27	43	47	3	4	1.5	1.5	7.8	0.30	2.00	1.10	0.239	E32304J
25	62	25.25	24	20	1.5	1.5	E32305J	2FD	61200	64100	6900	9100		33.5	33	52	57	3	5	1.5	1.5	8.6	0.30	2.00	1.10	0.386	E32305J
30	72	28.75	27	23	1.5	1.5	E32306J	2FD	82200	91600	5900	7900		38.5	39	59	66	3	5.5	1.5	1.5	9.8	0.31	1.90	1.05	0.588	E32306J
35	80	32.75	31	25	2	1.5	E32307J	2FE	101000	114000	5300	7000		45	44	66	74	3	7.5	2	1.5	12.2	0.31	1.90	1.05	0.776	E32307J
40	90	35.25	33	27	2	1.5	E32308J	2FD	116000	139000	4600	6200		50	50	73	82	3	8	2	1.5	10.9	0.35	1.74	0.96	1.06	E32308J
45	100	38.25	36	30	2	1.5	E32309J	2FD	146000	180000	4100	5500		55	56	82	93	3	8	2	1.5	11.4	0.35	1.74	0.96	1.43	E32309J
50	110	42.25	40	33	2.5	2	E32310J	2FD	176000	220000	3700	5000		62	62	90	102	3	9	2	2	12.9	0.35	1.74	0.96	1.89	E32310J
55	120	45.5	43	35	2.5	2	E32311J	2FD	200000	250000	3400	4500		67	68	99	111	4	10.5	2	2	13.1	0.35	1.74	0.96	2.38	E32311J
60	130	48.5	46	37	3	2.5	E32312J	2FD	221000	275000	3100	4200		74	74	107	120	4	11.5	2.5	2	16.2	0.35	1.74	0.96	2.92	E32312J
65	140	51	48	39	3	2.5	E32313J	2GD	276000	357000	2900	3900		79	80	117	130	4	12	2.5	2	16.3	0.35	1.74	0.96	3.64	E32313J
70	150	54	51	42	3	2.5	E32314J	2GD	317000	414000	2700	3600		84	86	125	140	4	12	2.5	2	16.6	0.35	1.74	0.96	4.50	E32314J
80	170	61.5	58	48	3	2.5	E32316J	2GD	378000	497000	2300	3100		94	98	142	159	4	13.5	2.5	2	19.5	0.35	1.73	0.95	6.32	E32316J
90	190	67.5	64	53	4	3	E32318J	2DG	461000	461000	2100	2800		108	108	157	177	5	14.5	3	2.5	20.9	0.35	1.74	0.96	8.61	E32318J

Every effort has been taken to ensure that the data listed in this catalogue is correct.
Finer Power Transmissions P/L will not accept liability for any damage or loss caused as a result of the data in this catalogue.
Every effort has been taken to ensure that the data listed in this catalogue is correct.
Finer Power Transmissions P/L will not accept liability for any damage or loss caused as a result of the data in this catalogue.

NACHI
Finer Power Transmissions P/L | www.finerpt.com

NACHI
Finer Power Transmissions P/L | www.finerpt.com

Tapered Roller Bearings
Inch Series

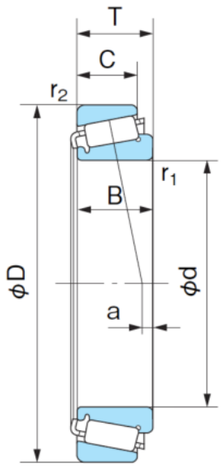

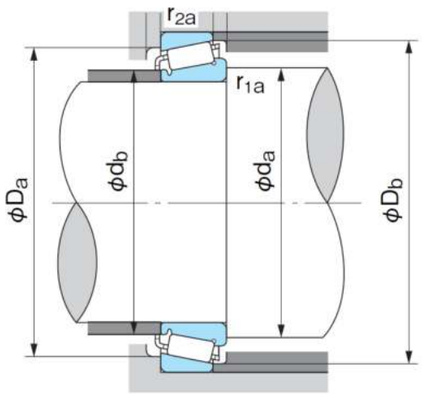

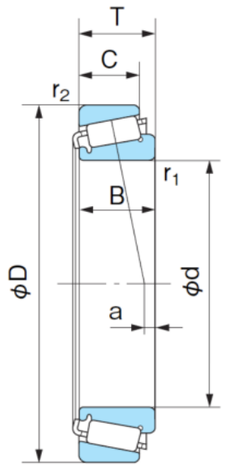

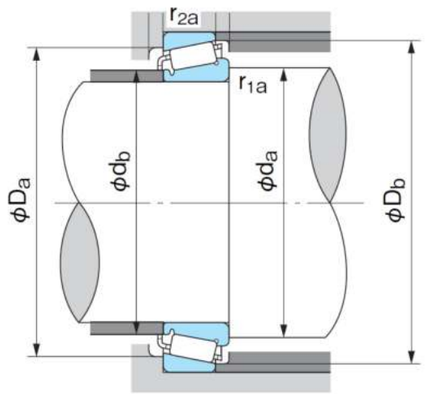

Boundary dimensions (mm)							Bearing No.		Basic load rating		Limiting speed (min-1)			Abutment and fillet dimensions (mm)						Load center (mm) a (1)	Constant e	Axial load factor		Mass(kg) Reference		Bearing No.	
d	D	T	B	C	r1 (min)	r2 (min)	Cone	Cup	Cr (kN)	Cor (kN)	Grease	Oil		da	db	Da	Db	r1a	r2a			Y1	Y0	Cone	Cup	Cone	Cup
15.875	42.863	14.288	14.288	9.525	1.6	1.6	H-11590	H-11520	17.8	17.7	10000	14000		24.5	22.5	34.5	39.5	1.6	1.6	1.2	0.70	0.85	0.47	0.06	0.04	H-11590	H-11520
28.575	68.263	22.225	22.225	17.463	0.80	1.60	H-02474	H-02420	51.0	61.1	6000	8000		36.5	36.0	59.0	63.0	0.80	1.60	5.1	0.42	1.44	0.79	0.252	0.150	H-02474	H-02420
19.050	49.225	18.034	19.050	14.288	1.20	1.20	H-09067	H-09195	37.7	37.7	8900	12000		25.5	24.0	42.0	44.5	1.20	1.20	7.4	0.27	2.26	1.24	0.114	0.065	H-09067	H-09195
	45.237	15.494	16.637	12.065	1.20	1.20	H-LM11949	H-LM11910	29.4	30.1	9400	13000		25.0	23.5	39.5	41.5	1.20	1.20	5.5	0.30	2.00	1.10	0.081	0.044	H-LM11949	H-LM11910
34.925	65.088	18.034	18.288	13.970	SP	1.20	H-LM48548	H-LM48510	48.0	58.5	6000	8000		46.0	40.0	58.0	61.0	SP	1.20	3.7	0.38	1.59	0.88	0.164	0.086	H-LM48548	H-LM48510

Every effort has been taken to ensure that the data listed in this catalogue is correct.
Finer Power Transmissions P/L will not accept liability for any damage or loss caused as a result of the data in this catalogue.

Every effort has been taken to ensure that the data listed in this catalogue is correct.
Finer Power Transmissions P/L will not accept liability for any damage or loss caused as a result of the data in this catalogue.

NACHI
Finer Power Transmissions P/L | www.finerpt.com

Spherical Roller Bearings
21300 Series

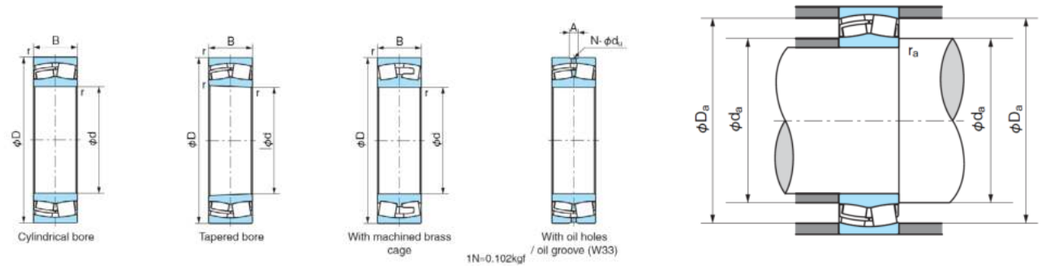

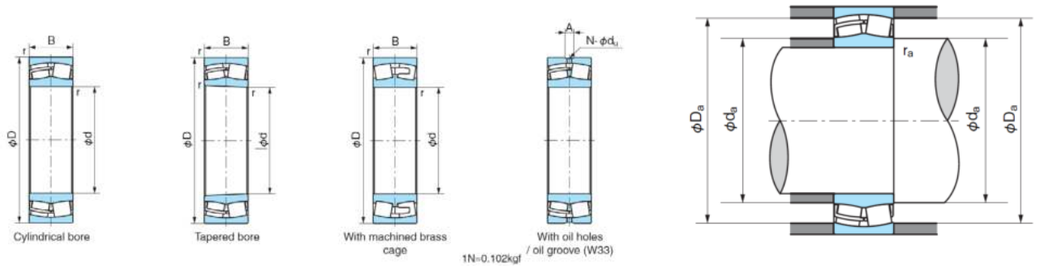

E, EX, EX1 Series																							
Boundary dimensions (mm)				Bearing No.		Basic dynamic load rating Cr (N)	Basic static load rating Cor (N)	Limiting speed (min-1)			Dimensions of lubrication holes and grooves			Abutment and fillet dimensions (mm)			Constant e	Axial load factor			Mass (kg) Cylindrical bore	Bearing No.	
d	D	B	r (min)	Cylindrical bore	Tapered bore			Grease lubrication	Oil lubrication		Hole diameter du	Groove width A	Hole count N	da (min)	Da (max)	ra (max)		Y1	Y2	Y0		Cylindrical bore	Tapered bore
35	80	21	1.5	21307E	21307EK	96000	76000	7,000	8,500		3	5	4	44	71	1.5	0.27	2.49	3.71	2.43	0.57	21307E	21307EK
40	90	23	1.5	21308E	21308EK	119000	95500	6,000	7,500		3	5	4	50	81	1.5	0.26	2.55	3.8	2.5	0.78	21308E	21308EK
45	100	25	1.5	21309E	21309EK	150000	124000	5,000	6,300		3	5	4	55	92	1.5	0.26	2.62	3.9	2.56	1.05	21309E	21309EK
50	110	27	2	21310E	21310EK	178000	151000	4,500	5,600		3	5	4	61	101	2	0.25	2.71	4.04	2.65	1.36	21310E	21310EK

EXQ Series																							
Boundary dimensions (mm)				Bearing No.		Basic dynamic load rating Cr (N)	Basic static load rating Cor (N)	Limiting speed (min-1)			Dimensions of lubrication holes and grooves			Abutment and fillet dimensions (mm)			Constant e	Axial load factor			Mass (kg) Cylindrical bore	Bearing No.	
d	D	B	r (min)	Cylindrical bore	Tapered bore			Grease lubrication	Oil lubrication		Hole diameter du	Groove width A	Hole count N	da (min)	Da (max)	ra (max)		Y1	Y2	Y0		Cylindrical bore	Tapered bore
55	120	29	2	21311EXQ	21311EXQK	200000	165000	5,000	5,900		3	5	4	65	110	2	0.25	2.71	4.03	2.65	1.7	21311EXQ	21311EXQK
60	130	31	2.1	21312EXQ	21312EXQK	238000	193000	4,200	5,000		3	5	4	72	118	2	0.24	2.78	4.14	2.72	2.1	21312EXQ	21312EXQK
65	140	33	2.1	21313EXQ	21313EXQK	270000	232000	4,000	4,700		3	6	4	77	128	2	0.24	2.83	4.21	2.76	2.6	21313EXQ	21313EXQK
70	150	35	2.1	21314EXQ	21314EXQK	310000	260000	3,500	4,200		3	6	4	82	138	2	0.24	2.84	4.23	2.78	3.1	21314EXQ	21314EXQK
75	160	37	2.1	21315EXQ	21315EXQK	340000	298000	3,500	4,200		3	6	4	87	148	2	0.23	2.87	4.27	2.8	3.8	21315EXQ	21315EXQK
80	170	39	2.1	21316EXQ	21316EXQK	380000	339000	3,300	4,000		4	8	4	92	158	2	0.23	2.88	4.29	2.82	4.5	21316EXQ	21316EXQK
85	180	41	3	21317EXQ	21317EXQK	415000	372000	3,300	4,200		4	8	4	99	166	2.5	0.23	2.89	4.3	2.83	5.3	21317EXQ	21317EXQK
90	190	43	3	21318EXQ	21318EXQK	460000	410000	3,100	3,800		4	8	6	104	176	2.5	0.23	2.91	4.33	2.84	6.1	21318EXQ	21318EXQK
95	200	45	3	21319EXQ	21319EXQK	500000	461000	3,000	3,600		4	8	6	109	186	2.5	0.23	2.92	4.35	2.86	7.1	21319EXQ	21319EXQK
100	215	47	3	21320EXQ	21320EXQK	580000	524000	2,600	3,500		4	8	6	114	201	2.5	0.22	3.02	4.49	2.95	8.7	21320EXQ	21320EXQK

Every effort has been taken to ensure that the data listed in this catalogue is correct.
Finer Power Transmissions P/L will not accept liability for any damage or loss caused as a result of the data in this catalogue.

Every effort has been taken to ensure that the data listed in this catalogue is correct.
Finer Power Transmissions P/L will not accept liability for any damage or loss caused as a result of the data in this catalogue.

NACHI
Finer Power Transmissions P/L | www.finerpt.com

Spherical Roller Bearings
22200 Series

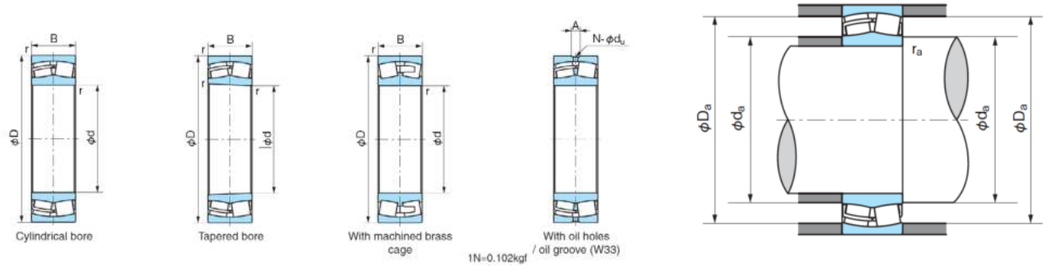

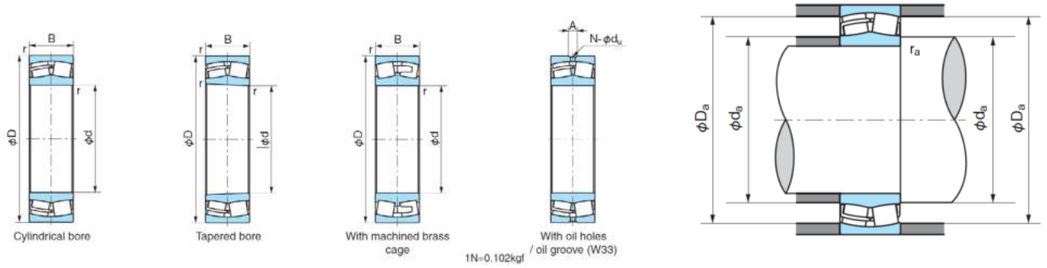

EXQ Series																							
Boundary dimensions (mm)				Bearing No.		Basic dynamic load rating Cr (N)	Basic static load rating Cor (N)	Limiting speed (min-1)			Dimensions of lubrication holes and grooves			Abutment and fillet dimensions (mm)			Constant e	Axial load factor			Mass (kg) Cylindrical bore	Bearing No.	
d	D	B	r (min)	Cylindrical bore	Tapered bore			Grease lubrication	Oil lubrication		Hole diameter du	Groove width A	Hole count N	da (min)	Da (max)	ra (max)		Y1	Y2	Y0		Cylindrical Bore	Tapered bore
25	52	18	1	22205EXQ	22205EXQK	63000	48000	11,600	13,700		3	5	4	30.5	46.5	1	0.35	1.91	2.85	1.87	0.19	22205EXQ	22205EXQK
30	62	20	1	22206EXQ	22206EXQK	84500	65000	9,400	11,600		3	5	4	35.5	56.5	1	0.33	2.04	3.04	2	0.3	22206EXQ	22206EXQK
35	72	23	1.1	22207EXQ	22207EXQK	112000	88500	8,300	10,000		3	6	4	42	65	1	0.32	2.1	3.13	2.06	0.46	22207EXQ	22207EXQK
40	80	23	1.1	22208EXQ	22208EXQK	126000	102000	7,400	8,900		3	6	4	47	73	1	0.28	2.37	3.53	2.32	0.56	22208EXQ	22208EXQK
45	85	23	1.1	22209EXQ	22209EXQK	133000	110000	6,600	7,900		3	6	4	52	78	1	0.26	2.55	3.8	2.5	0.61	22209EXQ	22209EXQK
50	90	23	1.1	22210EXQ	22210EXQK	142000	122000	6,200	7,500		3	6	4	57	83	1	0.24	2.79	4.15	2.73	0.65	22210EXQ	22210EXQK
55	100	25	1.5	22211EXQ	22211EXQK	171000	144000	5,800	7,000		3	6	4	63.5	91.5	1.5	0.24	2.84	4.23	2.78	0.88	22211EXQ	22211EXQK
60	110	28	1.5	22212EXQ	22212EXQK	210000	179000	5,300	6,300		3	6	4	68.5	101.5	1.5	0.25	2.74	4.08	2.68	1.2	22212EXQ	22212EXQK
65	120	31	1.5	22213EXQ	22213EXQK	246000	209000	4,700	5,600		3	6	4	73.5	111.5	1.5	0.25	2.69	4	2.63	1.56	22213EXQ	22213EXQK
70	125	31	1.5	22214EXQ	22214EXQK	257000	220000	4,400	5,600		3	6	4	78.5	116.5	1.5	0.24	2.87	4.27	2.8	1.65	22214EXQ	22214EXQK
75	130	31	1.5	22215EXQ	22215EXQK	265000	234000	4,400	5,300		3	6	4	83.5	121.5	1.5	0.22	3.07	4.58	3.01	1.74	22215EXQ	22215EXQK
80	140	33	2	22216EXQ	22216EXQK	299000	269000	4,000	4,700		3	6	4	90	130	2	0.22	3.07	4.58	3.01	2.19	22216EXQ	22216EXQK
85	150	36	2	22217EXQ	22217EXQK	355000	320000	3,700	4,500		4	7	4	95	140	2	0.22	3.01	4.48	2.94	2.75	22217EXQ	22217EXQK
90	160	40	2	22218EXQ	22218EXQK	410000	375000	3,500	4,200		4	7	4	100	150	2	0.24	2.79	4.15	2.73	3.5	22218EXQ	22218EXQK
95	170	43	2.1	22219EXQ	22219EXQK	465000	420000	3,300	4,000		5	8	4	107	158	2	0.24	2.76	4.11	2.7	4.24	22219EXQ	22219EXQK
100	180	46	2.1	22220EXQ	22220EXQK	520000	480000	3,100	3,800		5	8	4	112	168	2	0.25	2.74	4.08	2.68	5.1	22220EXQ	22220EXQK
110	200	53	2.1	22222EXQ	22222EXQK	680000	640000	2,900	3,400		5	10	6	122	188	2	0.26	2.64	3.93	2.58	7.36	22222EXQ	22222EXQK
120	215	58	2.1	22224EXQ	22224EXQK	785000	765000	2,600	3,200		5	10	6	132	203	2	0.26	2.6	3.87	2.54	9.28	22224EXQ	22224EXQK
130	230	64	3	22226EXQ	22226EXQK	910000	915000	2,400	2,800		5	10	6	144	216	2.5	0.26	2.55	3.8	2.5	11.6	22226EXQ	22226EXQK
140	250	68	3	22228EXQ	22228EXQK	1050000	1030000	2,100	2,600		6	12	6	154	236	2.5	0.26	2.6	3.87	2.54	13.9	22228EXQ	22228EXQK
150	270	73	3	22230EXQ	22230EXQK	1200000	1200000	2,000	2,500		6	14	6	164	256	2.5	0.25	2.69	4	2.63	18.9	22230EXQ	22230EXQK
160	290	80	3	22232E	22232EK	1230000	1330000	1,500	2,100		6	14	6	174	276	2.5	0.26	2.57	3.83	2.52	23.7	22232E	22232EK
170	310	86	4	22234E	22234EK	1390000	1510000	1,400	1,900		8	18	6	188	292	3	0.29	2.33	3.47	2.28	30	22234E	22234EK

E, EX, EX1 Series

EXQ Series
E, EX, EX1 Series

Every effort has been taken to ensure that the data listed in this catalogue is correct.
Finer Power Transmissions P/L will not accept liability for any damage or loss caused as a result of the data in this catalogue.

Every effort has been taken to ensure that the data listed in this catalogue is correct.
Finer Power Transmissions P/L will not accept liability for any damage or loss caused as a result of the data in this catalogue.

NACHI
Finer Power Transmissions P/L | www.finerpt.com

Spherical Roller Bearings
22300 Series

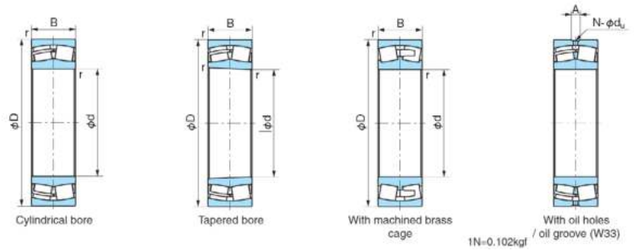

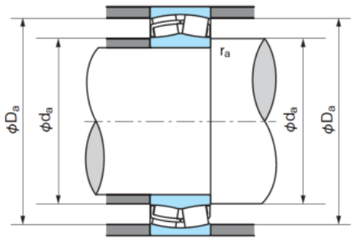

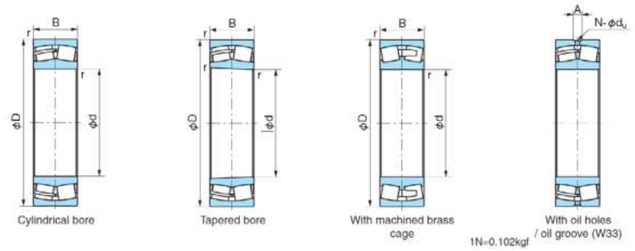

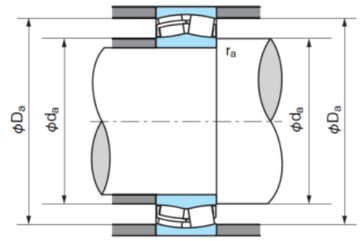

EXQ Series																							
Boundary dimensions (mm)				Bearing No.		Basic dynamic load rating Cr (N)	Basic static load rating Cor (N)	Limiting speed (min-1)			Dimensions of lubrication holes and grooves			Abutment and fillet dimensions (mm)			Constant e	Axial load factor			Mass (kg) Cylindrical bore	Bearing No.	
d	D	B	r (min)	Cylindrical bore	Tapered bore			Grease lubrication	Oil lubrication		Hole diameter du	Groove width A	Hole count N	da (min)	Da (max)	ra (max)		Y1	Y2	Y0		Cylindrical bore	Tapered bore
40	90	33	1.5	22308EXQ	22308EXQK	185000	151000	5,800	7,000		4	7	4	48.5	81.5	1.5	0.37	1.83	2.72	1.79	1.07	22308EXQ	22308EXQK
45	100	36	1.5	22309EXQ	22309EXQK	230000	182000	5,000	5,900		4	8	4	53.5	91.5	1.5	0.37	1.83	2.72	1.79	1.41	22309EXQ	22309EXQK
50	110	40	2	22310EXQ	22310EXQK	280000	235000	4,700	5,600		4	8	4	60	100	2	0.36	1.85	2.75	1.81	1.92	22310EXQ	22310EXQK
55	120	43	2	22311EXQ	22311EXQK	325000	263000	4,200	5,000		4	8	4	65	110	2	0.36	1.85	2.75	1.81	2.4	22311EXQ	22311EXQK
60	130	46	2.1	22312EXQ	22312EXQK	390000	330000	4,000	4,700		4	8	4	72	118	2	0.36	1.86	2.77	1.82	3.05	22312EXQ	22312EXQK
65	140	48	2.1	22313EXQ	22313EXQK	415000	355000	3,500	4,200		4	8	4	77	128	2	0.34	1.98	2.94	1.93	3.67	22313EXQ	22313EXQK
70	150	51	2.1	22314EXQ	22314EXQK	480000	415000	3,300	4,000		5	10	4	82	138	2	0.34	1.98	2.94	1.93	4.45	22314EXQ	22314EXQK
75	160	55	2.1	22315EXQ	22315EXQK	550000	475000	3,100	3,800		5	10	4	87	148	2	0.35	1.95	2.9	1.91	5.44	22315EXQ	22315EXQK
80	170	58	2.1	22316EXQ	22316EXQK	595000	520000	2,900	3,600		5	10	4	92	158	2	0.35	1.95	2.9	1.91	6.42	22316EXQ	22316EXQK
85	180	60	3	22317EXQ	22317EXQK	665000	585000	2,600	3,400		6	11	4	99	166	2.5	0.33	2.02	3	1.97	7.46	22317EXQ	22317EXQK
90	190	64	3	22318EXQ	22318EXQK	745000	660000	2,600	3,200		6	11	6	104	176	2.5	0.34	2	2.98	1.96	8.82	22318EXQ	22318EXQK
95	200	67	3	22319EXQ	22319EXQK	815000	725000	2,400	3,000		6	12	6	109	186	2.5	0.33	2.02	3	1.97	10.2	22319EXQ	22319EXQK
100	215	73	3	22320EXQ	22320EXQK	975000	875000	2,200	2,900		6	12	6	114	201	2.5	0.35	1.95	2.9	1.91	13.1	22320EXQ	22320EXQK
110	240	80	3	22322EXQ	22322EXQK	1150000	1040000	2,100	2,800		6	12	6	124	226	2.5	0.33	2.03	3.02	1.98	18.1	22322EXQ	22322EXQK
130	280	93	4	22326EXQ	22326EXQK	1450000	1340000	1,900	2,600		8	16	6	148	262	3	0.33	2.03	3.02	1.98	28.4	22326EXQ	22326EXQK
140	300	102	4	22328E	22328EK	1540000	1520000	1,600	2,200		10	22	6	158	282	3	0.37	1.82	2.72	1.78	35.9	22328E	22328EK

E, EX, EX1 Series																							
Boundary dimensions (mm)				Bearing No.		Basic dynamic load rating Cr (N)	Basic static load rating Cor (N)	Limiting speed (min-1)			Dimensions of lubrication holes and grooves			Abutment and fillet dimensions (mm)			Constant e	Axial load factor			Mass (kg) Cylindrical bore	Bearing No.	
d	D	B	r (min)	Cylindrical bore	Tapered bore			Grease lubrication	Oil lubrication		Hole diameter du	Groove width A	Hole count N	da (min)	Da (max)	ra (max)		Y1	Y2	Y0		Cylindrical bore	Tapered bore
150	320	108	4	22330E	22330EK	1770000	1740000	1,500	2,100		10	22	6	168	302	3	0.37	1.82	2.72	1.78	43.3	22330E	22330EK
160	340	114	4	22332E	22332EK	1950000	1950000	1,400	1,900		10	22	6	178	322	3	0.36	1.85	2.75	1.81	51.4	22332E	22332EK

Every effort has been taken to ensure that the data listed in this catalogue is correct.
Finer Power Transmissions P/L will not accept liability for any damage or loss caused as a result of the data in this catalogue.

Every effort has been taken to ensure that the data listed in this catalogue is correct.
Finer Power Transmissions P/L will not accept liability for any damage or loss caused as a result of the data in this catalogue.

NACHI
Finer Power Transmissions P/L | www.finerpt.com

Spherical Roller Bearings
23000 Series

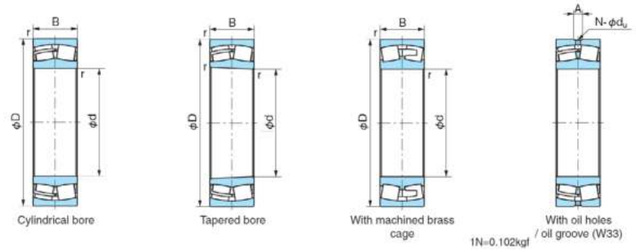

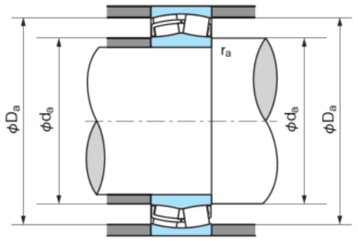

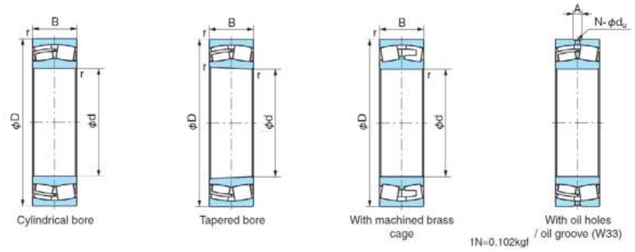

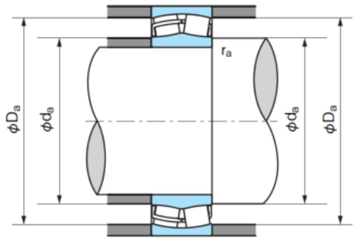

EXQ Series																								
Boundary dimensions (mm)				Bearing No.		Basic dynamic load rating Cr (N)	Basic static load rating Cor (N)	Limiting speed (min-1)			Dimensions of lubrication holes and grooves			Abutment and fillet dimensions (mm)			Constant e	Axial load factor			Mass (kg) Cylindrical bore	Bearing No.	
d	D	B	r (min)	Cylindrical bore	Tapered bore			Grease lubrication	Oil lubrication		Hole diameter du	Groove width A	Hole count N	da (min)	Da (max)	ra (max)		Y1	Y2	Y0		Cylindrical bore	Tapered bore
100	150	37	1.5	23020EXQ	23020EXQK	286000	325000	3,000	3,900		4	7	4	117	141	1.5	0.22	3.01	4.48	2.94	2.33	23020EXQ	23020EXQK
110	170	45	2	23022EXQ	23022EXQK	415000	475000	3,000	3,800		5	9	4	120	160	2	0.24	2.84	4.23	2.78	3.84	23022EXQ	23022EXQK
120	180	46	2	23024EXQ	23024EXQK	430000	515000	2,800	3,500		5	9	4	130	170	2	0.23	2.95	4.39	2.89	4.2	23024EXQ	23024EXQK
130	200	52	2	23026EXQ	23026EXQK	555000	660000	2,600	3,200		5	10	6	140	190	2	0.24	2.87	4.27	2.8	6.14	23026EXQ	23026EXQK
140	210	53	2	23028EXQ	23028EXQK	585000	710000	2,600	2,900		5	10	6	150	200	2	0.23	2.98	4.44	2.91	6.61	23028EXQ	23028EXQK
150	225	56	2.1	23030EXQ	23030EXQK	640000	790000	2,100	2,600		5	11	6	162	213	2	0.22	3.04	4.53	2.97	8.01	23030EXQ	23030EXQK
160	240	60	2.1	23032EXQ	23032EXQK	735000	915000	2,000	2,500		5	11	6	172	228	2	0.22	3.01	4.48	2.94	9.74	23032EXQ	23032EXQK
180	280	74	2.1	23036EXQ	23036EXQK	1070000	1330000	1,700	2,300		8	15	6	192	268	2	0.24	2.84	4.23	2.78	17.4	23036EXQ	23036EXQK
190	290	75	2.1	23038E	23038EK	1080000	1330000	1,400	1,900		6	14	6	202	278	2	0.25	2.69	4	2.63	18.4	23038E	23038EK

E, EX, EX1 Series																								
Boundary dimensions (mm)				Bearing No.		Basic dynamic load rating Cr (N)	Basic static load rating Cor (N)	Limiting speed (min-1)			Dimensions of lubrication holes and grooves			Abutment and fillet dimensions (mm)			Constant e	Axial load factor			Mass (kg) Cylindrical bore	Bearing No.	
d	D	B	r (min)	Cylindrical bore	Tapered bore			Grease lubrication	Oil lubrication		Hole diameter du	Groove width A	Hole count N	da (min)	Da (max)	ra (max)		Y1	Y2	Y0		Cylindrical bore	Tapered bore
240	360	92	3	23048E	23048EK	1530000	2000000	1,200	1,500		8	18	6	254	346	2.5	0.24	2.76	4.11	2.7	33.5	23048E	23048EK

Every effort has been taken to ensure that the data listed in this catalogue is correct.
Finer Power Transmissions P/L will not accept liability for any damage or loss caused as a result of the data in this catalogue.

Every effort has been taken to ensure that the data listed in this catalogue is correct.
Finer Power Transmissions P/L will not accept liability for any damage or loss caused as a result of the data in this catalogue.

NACHi
Finer Power Transmissions P/L | www.finerpt.com

NACHi
Finer Power Transmissions P/L | www.finerpt.com

Spherical Roller Bearings
23100 Series

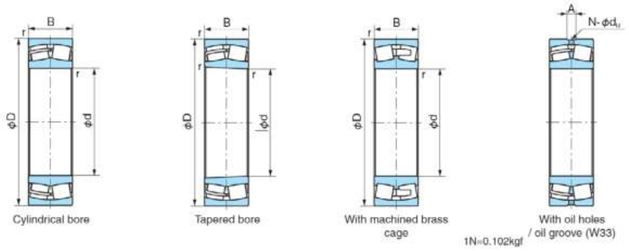

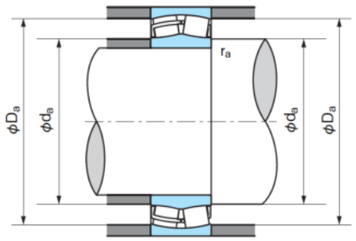

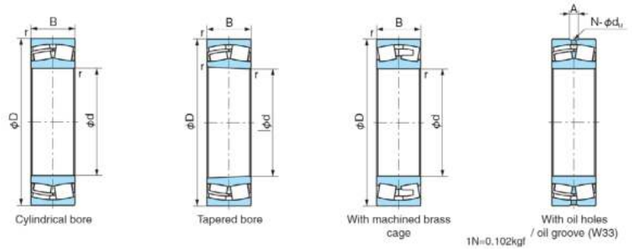

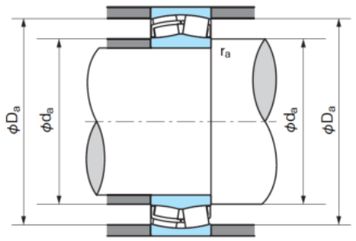

EXQ Series																							
Boundary dimensions (mm)				Bearing No.		Basic dynamic load rating Cr (N)	Basic static load rating Cor (N)	Limiting speed (min-1)			Dimensions of lubrication holes and grooves			Abutment and fillet dimensions (mm)			Constant e	Axial load factor			Mass (kg) Cylindrical bore	Bearing No.	
d	D	B	r (min)	Cylindrical bore	Tapered bore			Grease lubrication	Oil lubrication		Hole diameter du	Groove width A	Hole count N	da (min)	Da (max)	ra (max)		Y1	Y2	Y0		Cylindrical bore	Tapered bore
100	165	52	2	23120EXQ	23120EXQK	450000	500000	3,000	3,900		5	9	4	110	155	2	0.29	2.33	3.47	2.28	4.49	23120EXQ	23120EXQK
110	180	56	2	23122EXQ	23122EXQK	540000	610000	3,000	3,800		5	9	4	120	170	2	0.29	2.36	3.51	2.31	5.7	23122EXQ	23122EXQK
130	210	64	2	23126EXQ	23126EXQK	690000	799000	2,400	3,200		5	9	6	140	200	2	0.28	2.42	3.61	2.37	8.6	23126EXQ	23126EXQK
140	225	68	2.1	23128EXQ	23128EXQK	790000	940000	2,300	3,000		6	11	6	152	213	2	0.28	2.45	3.65	2.4	10.5	23128EXQ	23128EXQK
150	250	80	2.1	23130EXQ	23130EXQK	1000000	1230000	2,100	2,600		6	13	6	162	238	2	0.3	2.24	3.34	2.19	16.2	23130EXQ	23130EXQK
100	165	52	2	23120EX1	23120EX1K	450000	500000	2,500	3,300		5	9	4	110	155	2	0.29	2.33	3.47	2.28	4.49	23120EX1	23120EX1K

E, EX, EX1 Series																							
Boundary dimensions (mm)				Bearing No.		Basic dynamic load rating Cr (N)	Basic static load rating Cor (N)	Limiting speed (min-1)			Dimensions of lubrication holes and grooves			Abutment and fillet dimensions (mm)			Constant e	Axial load factor			Mass (kg) Cylindrical bore	Bearing No.	
d	D	B	r (min)	Cylindrical bore	Tapered bore			Grease lubrication	Oil lubrication		Hole diameter du	Groove width A	Hole count N	da (min)	Da (max)	ra (max)		Y1	Y2	Y0		Cylindrical bore	Tapered bore
110	180	56	2	23122EX1	23122EX1K	540000	610000	2,700	3,600		5	9	4	120	170	2	0.29	2.36	3.51	2.31	5.7	23122EX1	23122EX1K
130	210	64	2	23126EX1	23126EX1K	690000	799000	2,200	3,000		5	9	6	140	200	2	0.28	2.42	3.61	2.37	8.6	23126EX1	23126EX1K
140	225	68	2.1	23128EX1	23128EX1K	790000	940000	2,100	2,850		6	11	6	152	213	2	0.28	2.45	3.65	2.4	10.5	23128EX1	23128EX1K
170	280	88	2.1	23134EX1	23134EX1K	1260000	1530000	1,600	2,200		8	16	6	182	268	2	0.29	2.3	3.43	2.25	21.6	23134EX1	23134EX1K
190	320	104	3	23138E	23138EK	1720000	2120000	1,200	1,600		10	22	6	204	306	2.5	0.32	2.09	3.11	2.04	35	23138E	23138EK

Every effort has been taken to ensure that the data listed in this catalogue is correct.
Finer Power Transmissions P/L will not accept liability for any damage or loss caused as a result of the data in this catalogue.

Every effort has been taken to ensure that the data listed in this catalogue is correct.
Finer Power Transmissions P/L will not accept liability for any damage or loss caused as a result of the data in this catalogue.

NACHI
Finer Power Transmissions P/L | www.finerpt.com
Spherical Roller Bearings
23200 Series

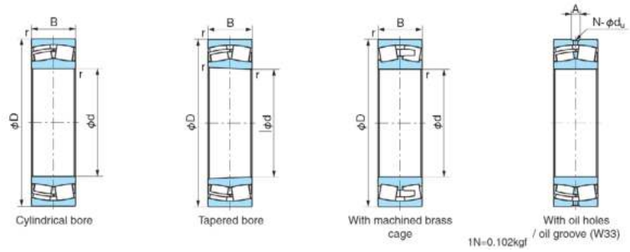

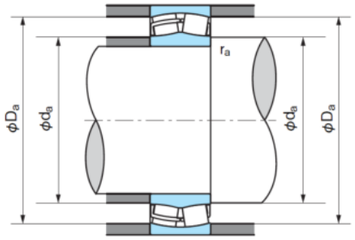

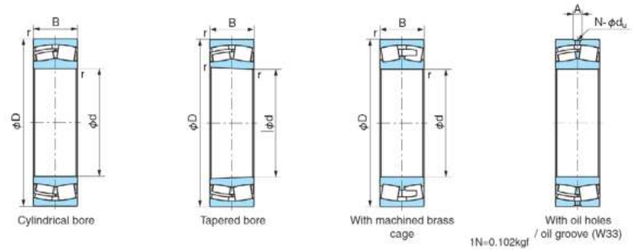

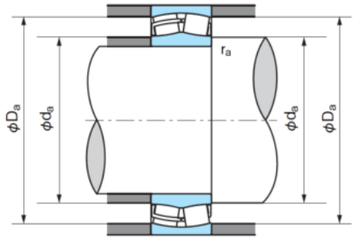

EXQ Series																							
Boundary dimensions (mm)				Bearing No.		Basic dynamic load rating Cr (N)	Basic static load rating Cor (N)	Limiting speed (min-1)			Dimensions of lubrication holes and grooves			Abutment and fillet dimensions (mm)			Constant e	Axial load factor			Mass (kg) Cylindrical bore	Bearing No.	
d	D	B	r (min)	Cylindrical bore	Tapered bore			Grease lubrication	Oil lubrication		Hole diameter du	Groove width A	Hole count N	da (min)	Da (max)	ra (max)		Y1	Y2	Y0		Cylindrical bore	Tapered bore
90	160	52.4	2	23218EXQ	23218EXQK	470000	482000	3,400	4,400		5	10	4	100	150	2	0.32	2.14	3.19	2.09	4.57	23218EXQ	23218EXQK
100	180	60.3	2.1	23220EXQ	23220EXQK	595000	629000	3,100	3,900		5	10	4	112	168	2	0.32	2.09	3.11	2.04	6.76	23220EXQ	23220EXQK
110	200	69.8	2.1	23222EXQ	23222EXQK	750000	793000	2,800	3,500		6	11	6	122	188	2	0.34	1.99	2.96	1.94	9.6	23222EXQ	23222EXQK
120	215	76	2.1	23224EXQ	23224EXQK	860000	956000	2,500	3,300		6	13	6	132	203	2	0.34	1.97	2.94	1.93	12	23224EXQ	23224EXQK
130	230	80	3	23226EXQ	23226EXQK	980000	1090000	2,300	2,900		6	13	6	144	216	2.5	0.33	2.05	3.05	2	14.2	23226EXQ	23226EXQK
140	250	88	3	23228EXQ	23228EXQK	1130000	1290000	2,100	2,600		8	15	6	154	236	2.5	0.34	1.99	2.96	1.95	18.8	23228EXQ	23228EXQK
150	270	96	3	23230EXQ	23230EXQK	1340000	1540000	2,000	2,500		8	15	6	164	256	2.5	0.34	1.96	2.93	1.92	24.2	23230EXQ	23230EXQK

E, EX, EX1 Series																							
Boundary dimensions (mm)				Bearing No.		Basic dynamic load rating Cr (N)	Basic static load rating Cor (N)	Limiting speed (min-1)			Dimensions of lubrication holes and grooves			Abutment and fillet dimensions (mm)			Constant e	Axial load factor			Mass (kg) Cylindrical bore	Bearing No.	
d	D	B	r (min)	Cylindrical bore	Tapered bore			Grease lubrication	Oil lubrication		Hole diameter du	Groove width A	Hole count N	da (min)	Da (max)	ra (max)		Y1	Y2	Y0		Cylindrical bore	Tapered bore
90	160	52.4	2	23218EX1	23218EX1K	470000	482000	3,100	4,200		5	10	4	100	150	2	0.32	2.14	3.19	2.09	4.57	23218EX1	23218EX1K
130	230	80	3	23226EX1	23226EX1K	980000	1090000	2,100	2,800		6	13	6	144	216	2.5	0.33	2.05	3.05	2	14.2	23226EX1	23226EX1K
170	310	110	4	23234E	23234EK	1720000	1970000	1,300	1,800		10	22	6	188	292	3	0.36	1.85	2.75	1.81	37	23234E	23234EK
190	340	120	4	23238E	23238EK	2070000	2450000	1,200	1,500		10	22	6	208	322	3	0.36	1.87	2.79	1.83	48	23238E	23238EK

Every effort has been taken to ensure that the data listed in this catalogue is correct.
Finer Power Transmissions P/L will not accept liability for any damage or loss caused as a result of the data in this catalogue.
Every effort has been taken to ensure that the data listed in this catalogue is correct.
Finer Power Transmissions P/L will not accept liability for any damage or loss caused as a result of the data in this catalogue.

NACHI
Finer Power Transmissions P/L | www.finerpt.com

Spherical Roller Bearings
24000 & 24100 Series

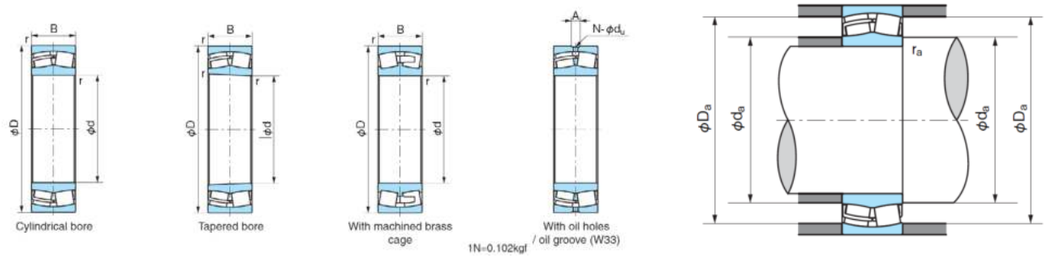

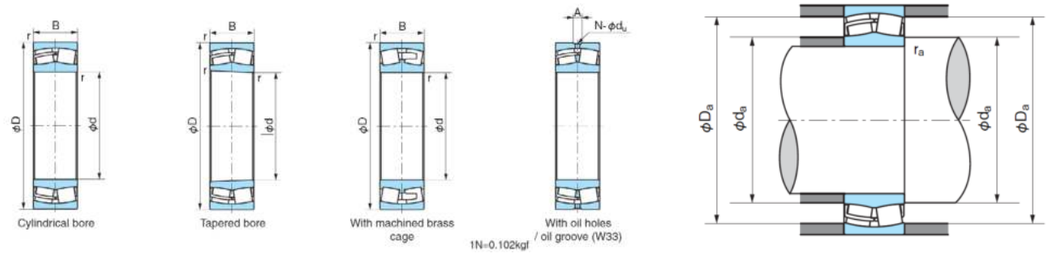

24000 Series

Boundary dimensions (mm)				Bearing No.	Basic dynamic load rating Cr (N)	Basic static load rating Cor (N)	Limiting speed (min-1)		Dimensions of lubrication holes and grooves			Abutment and fillet dimensions (mm)			Constant e	Axial load factor			Mass (kg) Cylindrical bore	Bearing No.
d	D	B	r (min)	Cylindrical bore			Grease lubrication	Oil lubrication	Hole diameter du	Groove width A	Hole count N	da (min)	Da (max)	ra (max)		Y1	Y2	Y0		Cylindrical bore
120	180	60	2	24024EXQ	540000	683000	2,800	3,600	5	9	4	130	170	2	0.3	2.23	3.32	2.18	5.36	24024EXQ
130	200	69	2	24026EXQ	710000	900000	2600	3300	6	11	6	140	190	2	0.32	2.14	3.18	2.09	7.93	24026EXQ
140	210	69	2	24028EXQ	720000	920000	2,400	3,200	6	11	6	150	200	2	0.3	2.28	3.39	2.23	8.40	24028EXQ
150	225	75	2.1	24030EXQ	815000	1060000	2300	2800	6	11	6	162	213	2	0.3	2.23	3.32	2.18	10.05	24030EXQ
160	240	80	2.1	24032EXQ	950000	1280000	2,100	2,600	6	11	6	172	228	2	0.3	2.24	3.34	2.19	12.7	24032EXQ
110	180	69	2	24122EXQ	633000	743000	3000	3800	6	11	4	120	170	2	0.37	1.84	2.74	1.80	6.89	24122EXQ

24100Series

Boundary dimensions (mm)				Bearing No.	Basic dynamic load rating Cr (N)	Basic static load rating Cor (N)	Limiting speed (min-1)		Dimensions of lubrication holes and grooves			Abutment and fillet dimensions (mm)			Constant e	Axial load factor			Mass (kg) Cylindrical bore	Bearing No.
d	D	B	r (min)	Cylindrical bore			Grease lubrication	Oil lubrication	Hole diameter du	Groove width A	Hole count N	da (min)	Da (max)	ra (max)		Y1	Y2	Y0		Cylindrical bore
130	210	80	2	24126EXQ	840000	1030000	2,400	3,200	6	11	6	140	200	2	0.36	1.9	2.83	1.86	10.7	24126EXQ
140	225	85	2.1	24128EXQ	950000	1180000	2,300	2,900	8	14	6	152	213	2	0.36	1.87	2.79	1.83	13	24128EXQ
150	250	100	2.1	24130EXQ	1230000	1520000	2100	2600	8	14	6	162	238	2	0.38	1.77	2.64	1.73	19.6	24130EXQ
160	270	109	2.1	24132EX1	1450000	1810000	1,800	2,400	10	17	6	172	258	2	0.39	1.74	2.59	1.7	25.5	24132EX1

Shaker Screen EXQ-V Series

Bearing No.	Boundary Dimension (mm)			Dynamic Load (N)
	Bore	O.D.	Width	
22308EXQW33VCS67	40	90	33	185000
22309EXQW33VCS83	45	100	36	230000
22310EXQW33VCS83	50	110	40	280000
22311EXQW33VCS100	55	120	43	325000
22312EXQW33VCS100	60	130	46	390000
22313EXQW33VCS100	65	140	48	415000
22314EXQW33VCS120	70	150	51	480000
22315EXQW33VCS120	75	160	55	550000
22316EXQW33VCS120	80	170	58	595000
22317EXQW33VCS147	85	180	60	665000
22318EXQW33VCS147	90	190	64	745000
22319EXQW33VCS147	95	200	67	815000
22320EXQW33VCS147	100	215	73	975000
22322EXQW33VCS177	110	240	80	1150000
22324EXQW33VCS177	120	260	86	1250000
22326EXQW33VCS207	130	280	93	1450000
22328EW33VCS207	140	300	102	-
22330EW33VCS240	150	320	108	-

Every effort has been taken to ensure that the data listed in this catalogue is correct.
Finer Power Transmissions P/L will not accept liability for any damage or loss caused as a result of the data in this catalogue.

Every effort has been taken to ensure that the data listed in this catalogue is correct.
Finer Power Transmissions P/L will not accept liability for any damage or loss caused as a result of the data in this catalogue.

NACHI
Finer Power Transmissions P/L | www.finerpt.com
Spherical Roller Thrust Bearings

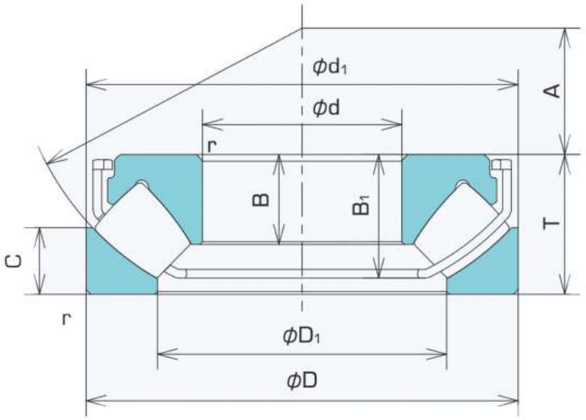

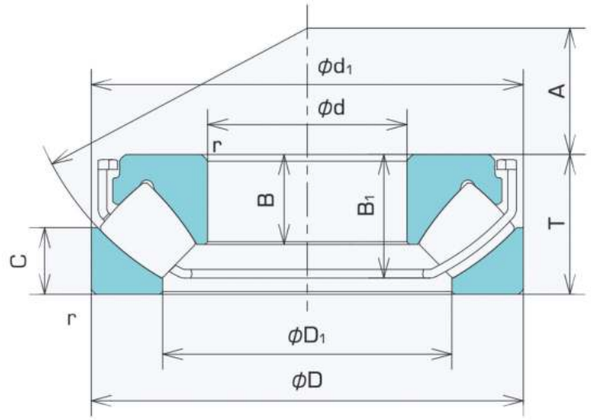

29300 Series										29300 Series												
Boundary dimensions (mm)				Bearing No	Basic dynamic load rating Ca(N)	Basic static load rating Coa (N)	Limiting speed (min-1)			Reference Dimensions (mm)						Abutment and fillet dimensions (mm)			Spacer dimensions (mm)		Mass (kg)	Bearing No
d	D	T	r (min)				Grease lubrication	Oil lubrication		d1	D2	B	B1	C	A	da (min)	Da (max)	ra (max)	db1 (max)	db2 (max)		
85	150	39	1.5	29317EX	365000	1060000	1600	2700		134	25	25	35	19	50	115	135	1.5	90.0	90.0	2.67	29317EX
90	155	39	1.5	29318EX	355000	1070000	1600	2700		135.2	116	23.8	35.1	19	52	120	140	1.5	95.0	95.0	2.75	29318EX
100	170	42	1.5	29320E	355000	1260000	-	2500		163	129	14	40	20.8	58	130	150	1.5	-	-	3.91	29320E
110	190	48	2	29322EX	550000	1730000	1300	2100		165.1	140.6	30.9	44	23	64	145	165	2.0	116.0	117.0	5.22	29322EX
120	210	54	2.1	29324EX	670000	2160000	1100	1900		184.5	155	34.5	48.7	26	70	160	180	2.0	127.0	128.0	7.30	29324EX
130	225	58	2.1	29326E	665000	2420000	-	1800		215	171	19	55	28	76	170	195	2.0	-	-	9.45	29326E
140	240	60	2.1	29328EX	860000	2840000	950	1600		218.4	179	38.5	54.8	29	82	185	205	2.0	147.5	149.0	10.5	29328EX
150	250	60	2.1	29330E	735000	2840000	-	1600		240	194	20	57	29	87	195	215	2.0	-	-	11.7	29330E

29400 Series										29400 Series												
Boundary dimensions (mm)				Bearing No	Basic dynamic load rating Ca(N)	Basic static load rating Coa (N)	Limiting speed (min-1)			Reference Dimensions (mm)						Abutment and fillet dimensions (mm)			Spacer dimensions (mm)		Mass (kg)	Bearing No
d	D	T	r (min)				Grease lubrication	Oil lubrication		d1	D2	B	B1	C	A	da (min)	Da (max)	ra (max)	db1 (max)	db2 (max)		
60	130	42	1.5	29412E	299000	890000	-	2800		123	89	15	39.5	20	38	91	108	1.5	-	-	2.75	29412E
65	140	45	2	29413EX	410000	1110000	1700	2700		123	93.5	29.5	40	21	42	99	115	2.0	72.0	72.0	3.20	29413EX
70	150	48	2	29414E	375000	1110000	-	2400		142	103	17	45.5	23	44	106	125	2.0	-	-	4.16	29414E
75	160	51	2	29415EX	525000	1470000	1600	2300		140	105.6	34.5	45.6	24	47	113	132	2.0	82.5	82.5	4.70	29415EX
80	170	54	2.1	29416EX	580000	1630000	1500	2100		149	113	36	48.2	26	50	120	140	2.0	88.0	88.0	5.60	29416EX
85	180	58	2.1	29417EX	640000	1810000	1300	2000		158.2	120.5	37	50.6	28	54	130	150	2.0	94.0	94.0	6.69	29417EX
90	190	60	2.1	29418EX	710000	2080000	1300	1900		162	127	40.5	53	29	56	135	157	2.0	99.0	99.0	7.83	29418EX
100	210	67	3	29420EX	870000	2530000	1100	1700		181	139	44.5	59.6	32	62	150	175	2.5	108.0	110.0	10.6	29420EX
120	250	78	4	29424E	1030000	3450000	-	1400		236	174	29	74	37	74	180	205	3.0	-	-	18.5	29424E
140	280	85	4	29428EX	1410000	4350000	850	1200		246	196	53.6	74.4	41	86	205	235	3.0	153.0	160.0	22.8	29428EX

Every effort has been taken to ensure that the data listed in this catalogue is correct.
Finer Power Transmissions P/L will not accept liability for any damage or loss caused as a result of the data in this catalogue.
Every effort has been taken to ensure that the data listed in this catalogue is correct.
Finer Power Transmissions P/L will not accept liability for any damage or loss caused as a result of the data in this catalogue.

NACHI
Finer Power Transmissions P/L | www.finerpt.com

Cylindrical Roller Bearings
200 & 2200 Series

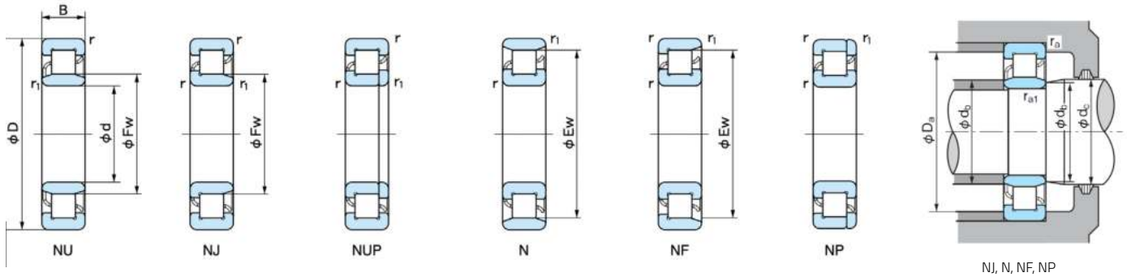

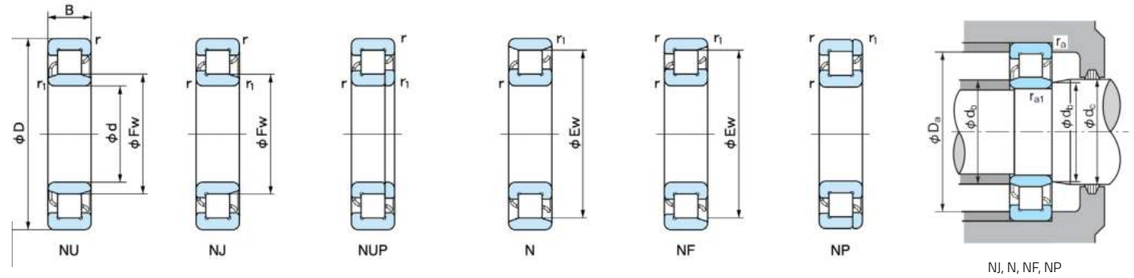

200 Series																	200 Series																		
Boundary dimensions (mm)							Bearing No.						Basic dynamic load rating Cr (N)	Basic static load rating Cor (N)	Limiting speed (min-1)(1)			Abutment and fillet dimensions (mm)										Mass (kg)		Dimensions of L-shaped thrust collar (mm)						
d	D	B	Ew	Fw	r (min)	r1 (min)	NU	NJ	NUP*	N*	NF	NP*			Grease lubrication	Oil lubrication		da (min)	db (min)	db (max)	dc (min)	dd (min)	Da (max)	Db (max)	Db (min)	ra (max)	ra1 (max)	NU	N	Bearing No.	d	d1 (max)	B1	B2	r1 (min)	Mass (kg)
17	40	12	33.9	22.9	0.6	0.3	NU 203	NJ	NUP	N	NF	NP	12600	7950	16000	19000		22	19	22	24	25	35	34	34	0.6	0.3	0.082	0.08	-	-	-	-	-	-	-
20	47	14	40	27	1	0.6	NU 204	NJ	NUP	N	NF	NP	15400	12700	15000	18000		26	25	26	29	32	41	42	42	1	0.6	0.112	0.11	HJ 204	20	30	3	6.75	0.6	0.012
25	52	15	45	32	1	0.6	NU 205	NJ	NUP	N	NF	NP	17700	15700	13000	16000		31	30	31	34	37	46	47	47	1	0.6	0.133	0.13	HJ 205	25	35	3	7.25	0.6	0.015
30	62	16	53.5	38.5	1	0.6	NU 206	NJ	NUP	N	NF	NP	23500	21500	11000	13000		36	35	37	40	44	56	57	56	1	0.6	0.204	0.2	HJ 206	30	41.8	4	8.25	0.6	0.026
35	72	17	61.8	43.8	1.1	0.6	NU 207	NJ	NUP	N	NF	NP	33500	31500	9500	11000		42	40	43	46	50	65	67	64	1	0.6	0.295	0.29	HJ 207	35	47.6	4	8	0.6	0.032
40	80	18	70	50	1.1	1.1	NU 208	NJ	NUP	N	NF	NP	43500	43000	8500	10000		47	47	49	52	56	73	73	72	1	1	0.369	0.36	HJ 208	40	54.2	5	9	1.1	0.049
45	85	19	75	55	1.1	1.1	NU 209	NJ	NUP	N	NF	NP	46000	47000	7500	9000		52	52	54	57	61	78	78	77	1	1	0.43	0.42	HJ 209	45	59	5	9.5	1.1	0.054
50	90	20	80.4	60.4	1.1	1.1	NU 210	NJ	NUP	N	NF	NP	48000	51000	7100	8500		57	57	58	62	67	83	83	83	1	1	0.481	0.47	HJ 210	50	64.6	5	10	1.1	0.063
55	100	21	88.5	66.5	1.5	1.1	NU 211	NJ	NUP	N	NF	NP	58000	62500	6300	7500		63.5	62	65	68	73	91.5	93	91	1.5	1	0.634	0.63	HJ 211	55	70.8	6	11	1.1	0.086
60	110	22	97.5	73.5	1.5	1.5	NU 212	NJ	NUP	N	NF	NP	68500	75000	6000	7100		68.5	68.5	71	75	80	101.5	101.5	100	1.5	1.5	0.835	0.82	HJ 212	60	78.4	6	11	1.5	0.109
65	120	23	105.6	79.6	1.5	1.5	NU 213	NJ	NUP	N	NF	NP	84000	94500	5300	6300		73.5	73.5	77	81	87	111.5	111.5	108	1.5	1.5	1.06	1.04	HJ 213	65	84.8	6	11	1.5	0.127
70	125	24	110.5	84.5	1.5	1.5	NU 214	NJ	NUP	N	NF	NP	83500	95000	5000	6300		78.5	78.5	82	86	92	116.5	116.5	114	1.5	1.5	1.16	1.14	HJ 214	70	89.6	7	12.5	1.5	0.154
75	130	25	-	88.5	1.5	1.5	NU 215 E	NJ	NUP	-	-	-	130000	156000	4300	5300		-	83.5	87	90	96	121.5	-	-	1.5	1.5	1.38	-	HJ 215 E	75	94.5	7	11	1.5	0.159
75	130	25	116.5	88.5	1.5	1.5	NU 215	NJ	NUP	N	NF*	NP	96500	111000	4800	6000		83.5	83.5	87	90	96	121.5	121.5	120	1.5	1.5	1.24	1.22	HJ 215	75	94	7	12.5	1.5	0.161
80	140	26	125.3	95.3	2	2	NU 216	NJ	NUP	N	NF*	NP	106000	122000	4500	5300		90	90	94	97	104	130	130	128	2	2	1.53	1.5	HJ 216	80	101.2	8	13.5	2	0.214
85	150	28	133.8	101.8	2	2	NU 217	NJ	NUP	N	NF*	NP	120000	140000	4300	5000		95	95	99	104	110	140	140	137	2	2	1.92	1.87	HJ 217	85	108.2	8	14	2	0.253
90	160	30	143	107	2	2	NU 218	NJ	NUP	N	NF*	NP	152000	178000	4000	4800		100	100	105	109	116	150	150	146	2	2	2.3	2.25	HJ 218	90	114.2	9	15	2	0.311
95	170	32	151.5	113.5	2.1	2.1	NU 219	NJ	NUP	N	NF*	NP	165000	195000	3800	4500		107	107	111	116	123	158	158	155	2	2	2.81	2.75	HJ 219	95	121	9	15.5	2.1	0.357
100	180	34	160	120	2.1	2.1	NU 220	NJ	NUP	N	NF*	NP	183000	217000	3600	4300		112	112	117	122	130	168	168	164	2	2	3.3	3.23	HJ 220	100	128	10	17	2.1	0.448
25	52	18	-	32	1	0.6	NU 2205	NJ	NUP	-	-	-	24300	23500	12000	14000		-	30	31	34	37	46	-	-	1	0.6	0.163	-	HJ 2205	25	35	3	7.5	0.6	0.016
30	52	18	-	32	1	0.6	NU 2206	NJ	NUP	-	-	-	24300	23500	12000	14000		-	30	31	34	37	46	-	-	1	0.6	0.163	-	HJ 2206	25	35	3	7.5	0.6	0.016

* Not a stocked range although available on request. .

2200 Series																	2200 Series																		
Boundary dimensions (mm)							Bearing No.						Basic dynamic load rating Cr (N)	Basic static load rating Cor (N)	Limiting speed (min-1)(1)			Abutment and fillet dimensions (mm)										Mass (kg)		Dimensions of L-shaped thrust collar (mm)						
d	D	B	Ew	Fw	r (min)	r1 (min)	NU	NJ	NUP*	N*	NF	NP*			Grease lubrication	Oil lubrication		da (min)	db (min)	db (max)	dc (min)	dd (min)	Da (max)	Db (max)	Db (min)	ra (max)	ra1 (max)	NU	N	Bearing No.	d	d1 (max)	B1	B2	r1 (min)	Mass (kg)
35	52	18	-	32	1	0.6	NU 2207	NJ	NUP	-	-	-	24300	23500	12000	14000		-	30	31	34	37	46	-	-	1	0.6	0.163	-	HJ 2207	25	35	3	7.5	0.6	0.016
140	250	68	-	169	3	3	NU 2228 E	NJ	NUP	-	-	-	570000	835000	2200	2600		-	154	166	171	182	236	-	-	2.5	2.5	14.9	-	HJ 2228 E	140	180	11	23	3	1.08

* Not a stocked range although available on request. .

Every effort has been taken to ensure that the data listed in this catalogue is correct.
Finer Power Transmissions P/L will not accept liability for any damage or loss caused as a result of the data in this catalogue.

Every effort has been taken to ensure that the data listed in this catalogue is correct.
Finer Power Transmissions P/L will not accept liability for any damage or loss caused as a result of the data in this catalogue.

NACHI
Finer Power Transmissions P/L | www.finerpt.com
Cylindrical Roller Bearings
300 Series

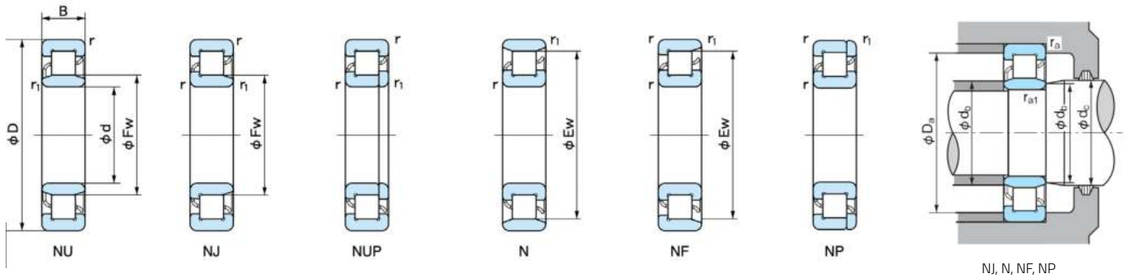

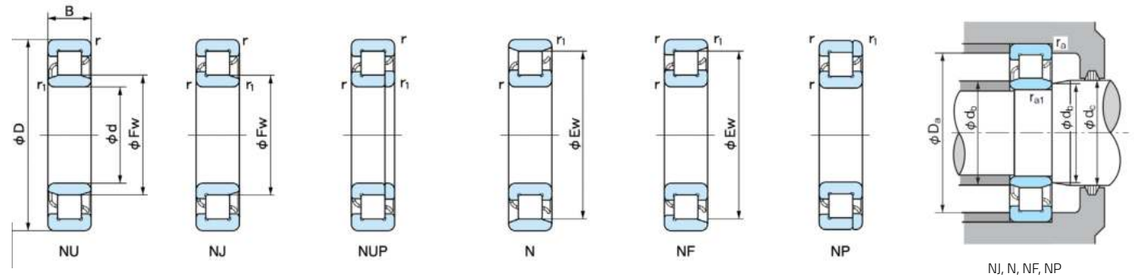

Boundary dimensions (mm)							Bearing No.						Basic dynamic load rating Cr (N)	Basic static load rating Cor (N)	Limiting speed (min-1)(1)		Abutment and fillet dimensions (mm)										Mass (kg)		Dimensions of L-shaped thrust collar (mm)						
d	D	B	Ew	Fw	r (min)	r1 (min)	NU	NJ	NUP*	N*	NF	NP*			Grease lubrication	Oil lubrication	da (min)	db (min)	db (max)	dc (min)	dd (min)	Da (max)	Db (max)	Db (min)	ra (max)	ra1 (max)	NU	N	Bearing No.	d	d1 (max)	B1	B2	r1 (min)	Mass (kg)
20	52	15	44.5	28.5	1.1	0.6	NU 304	NJ	NUP	N	NF*	NP	21400	17300	12000	15000	27	25	27	30	33	45	47	47	1	0.6	0.154	0.15	HJ 304	20	31.8	4	7.5	0.6	0.017
25	62	17	53	35	1.1	1.1	NU 305	NJ	NUP	N	NF	NP	29300	25200	10000	10000	32	32	33	37	40	55	55	55	1	1	0.238	0.23	HJ 305	25	39	4	8	1.1	0.027
30	72	19	62	42	1.1	1.1	NU 306	NJ	NUP	N	NF	NP	38500	35000	8500	11000	37	37	40	44	48	65	65	64	1	1	0.357	0.35	HJ 306	30	45.9	5	9.5	1.1	0.044
35	80	21	68.2	46.2	1.5	1.1	NU 307	NJ	NUP	N	NF	NP	49500	47000	8000	9500	43.5	42	45	48	53	71.5	73	71	1.5	1	0.47	0.46	HJ 307	35	50.8	6	11	1.1	0.06
40	90	23	77.5	53.5	1.5	1.5	NU 308	NJ	NUP	N	NF	NP	58500	57000	6700	8500	48.5	48.5	51	55	60	81.5	81.5	80	1.5	1.5	0.665	0.65	HJ 308	40	58.4	7	12.5	1.5	0.09
45	100	25	86.5	58.5	1.5	1.5	NU 309	NJ	NUP	N	NF	NP	78500	77500	6300	7500	53.5	53.5	57	60	66	91.5	91.5	89	1.5	1.5	0.871	0.85	HJ 309	45	64	7	12.5	1.5	0.105
50	110	27	95	65	2	2	NU 310	NJ	NUP	N	NF	NP	87000	86000	5600	6700	60	60	63	67	73	100	100	98	2	2	1.17	1.14	HJ 310	50	71	8	14	2	0.145
55	120	29	104.5	70.5	2	2	NU 311	NJ	NUP	N	NF	NP	111000	111000	5000	6300	65	65	69	72	80	110	110	107	2	2	1.43	1.4	HJ 311	55	77.2	9	15	2	0.186
60	130	31	113	77	2.1	2.1	NU 312	NJ	NUP	N	NF	NP	124000	126000	4800	5600	72	72	75	79	86	118	118	116	2	2	1.82	1.78	HJ 312	60	84.2	9	15.5	2.1	0.224
65	140	33	121.5	83.5	2.1	2.1	NU 313	NJ	NUP	N	NF	NP	135000	139000	4500	5300	77	77	81	85	93	128	128	125	2	2	2.27	2.22	HJ 313	65	91	10	17	2.1	0.286
70	150	35	130	90	2.1	2.1	NU 314	NJ	NUP	N	NF	NP	158000	220000	4000	5000	82	82	87	92	100	138	138	134	2	2	2.73	2.68	HJ 314	70	98	10	17.5	2.1	0.336
75	160	37	139.5	95.5	2.1	2.1	NU 315	NJ	NUP	N	NF	NP	190000	205000	3800	4800	87	87	93	97	106	148	148	143	2	2	3.21	3.15	HJ 315	75	104.2	11	18.5	2.1	0.406
80	170	39	147	103	2.1	2.1	NU 316	NJ	NUP	N	NF*	NP	190000	207000	3600	4300	92	92	99	105	114	158	158	151	2	2	3.93	3.83	HJ 316	80	111.8	11	19.5	2.1	0.479
85	180	41	156	108	3	3	NU 317	NJ	NUP	N	NF*	NP	224000	247000	3400	4000	99	99	106	110	119	166	166	160	2.5	2.5	4.54	4.44	HJ 317	85	117.5	12	20.5	3	0.56

* Not a stocked range although available on request. .

BOOK 5: BEARINGS – NACHI
5.1 NACHI BEARINGS

Every effort has been taken to ensure that the data listed in this catalogue is correct.
Finer Power Transmissions P/L will not accept liability for any damage or loss caused as a result of the data in this catalogue.
Every effort has been taken to ensure that the data listed in this catalogue is correct.
Finer Power Transmissions P/L will not accept liability for any damage or loss caused as a result of the data in this catalogue.

NACHI
Finer Power Transmissions P/L | www.finerpt.com
Double Row Cylindrical Roller Bearings

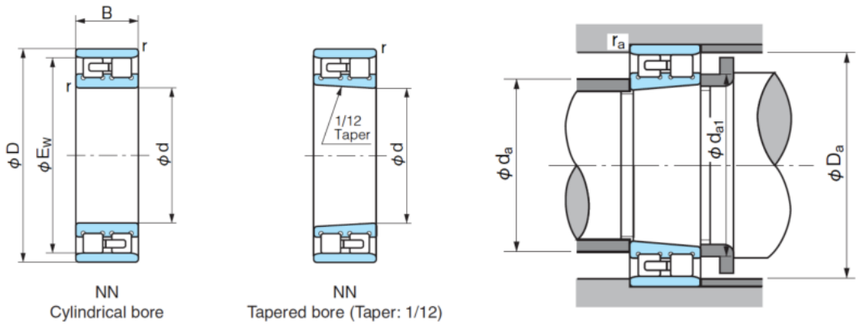

NN
Cylindrical bore

NN
Tapered bore (Taper: 1/12)

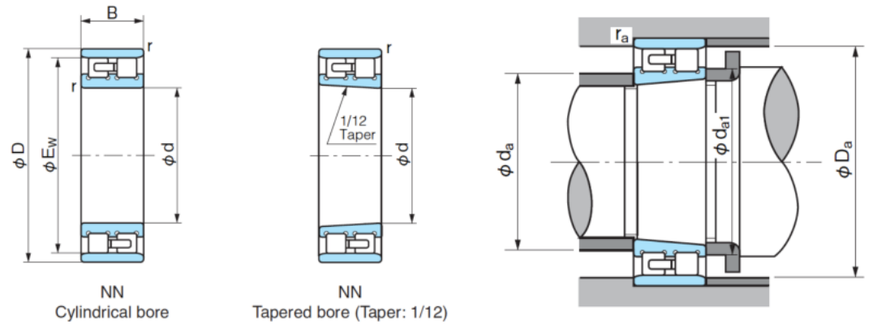

NN
Cylindrical bore

NN
Tapered bore (Taper: 1/12)

Boundary dimensions (mm)					Bearing No.		Basic dynamic load rating Cr (N)	Basic static load rating Cor (N)		Limiting speed (min-1)(1)		Boundary dimensions (mm)					Mass (kg) (Reference Tapered bore)	Bearing No.
d	D	B	Ew	r (min)	Cylindrical bore	Tapered bore				Grease lubrication	Oil lubrication	da (min)	da1 (min)	Da (max)	Da (min)	ra (max)		
25	47	16	41.3	0.6	NN3005	NN3005K	25800	30000		1500	17000	30	30	42	41.8	0.6	0.123	NN3005K
30	55	19	48.5	1	NN3006	NN3006K	31000	37000		1200	15000	36	37	49	49	1	0.199	NN3006K
35	62	20	55	1	NN3007	NN3007K	39500	50000		11000	13000	41	42	56	56	1	0.258	NN3007K
40	68	21	61	1	NN3008	NN3008K	43500	55500		9800	11000	46	48	62	62	1	0.312	NN3008K
45	75	23	67.5	1	NN3009	NN3009K	52000	68500		8800	10000	51	52	69	69	1	0.405	NN3009K
50	80	23	72.5	1	NN3010	NN3010K	53000	72500		8200	9600	56	58	74	74	1	0.454	NN3010K
55	90	26	81	1.1	NN3011	NN3011K	69500	96500		7300	8600	62	64	83	82	1	0.651	NN3011K
60	95	26	86.1	1.1	NN3012	NN3012K	73500	106000		6800	8000	67	68	88	87	1	0.704	NN3012K
65	100	26	91	1.1	NN3013	NN3013K	77000	116000		6400	7600	72	74	93	92	1	0.758	NN3013K
70	110	30	100	1.1	NN3014	NN3014K	97500	148000		5700	6800	77	78	103	101	1	1.04	NN3014K
75	115	30	105	1.1	NN3015	NN3015K	96500	149000		5500	6400	82	84	108	106	1	1.14	NN3015K
80	125	34	113	1.1	NN3016	NN3016K	119000	186000		5000	6000	87	90	118	114	1	1.52	NN3016K
85	130	34	118	1.1	NN3017	NN3017K	125000	201000		4800	5600	92	96	123	119	1	1.61	NN3017K
90	140	37	127	1.5	NN3018	NN3018K	143000	228000		4500	5200	98.5	100	131.5	129	1.5	2.07	NN3018K
95	145	37	132	1.5	NN3019	NN3019K	150000	246000		4300	5000	103.5	106	136.5	134	1.5	2.17	NN3019K
100	150	37	137	1.5	NN3020	NN3020K	157000	265000		4000	4800	108.5	112	141.5	139	1.5	2.26	NN3020K
110	170	45	155	2	NN3022	NN3022K	229000	375000		3600	4300	120	122	160	157	2	3.68	NN3022K
120	180	46	165	2	NN3024	NN3024K	239000	405000		3300	3900	130	132	170	167	2	3.98	NN3024K
130	220	52	182	2	NN3026	NN3026K	284000	475000		3000	3600	140	144	190	183	2	5.92	NN3026K
140	210	53	192	2	NN3028	NN3028K	298000	515000		2800	3400	150	154	200	194	2	6.44	NN3028K
150	225	56	206	2.1	NN3030	NN3030K	335000	585000		2600	3100	162	164	213	208	2	7.81	NN3030K
160	240	60	219	2.1	NN3032	NN3032K	375000	660000		2500	2900	172	174	228	221	2	8.92	NN3032K

* Not a stocked range although available on request.

Every effort has been taken to ensure that the data listed in this catalogue is correct.
Finer Power Transmissions P/L will not accept liability for any damage or loss caused as a result of the data in this catalogue.
Every effort has been taken to ensure that the data listed in this catalogue is correct.
Finer Power Transmissions P/L will not accept liability for any damage or loss caused as a result of the data in this catalogue.

NACHI
Finer Power Transmissions P/L | www.finerpt.com

NACHI
Finer Power Transmissions P/L | www.finerpt.com

Thrust Ball Bearings
51100 Series

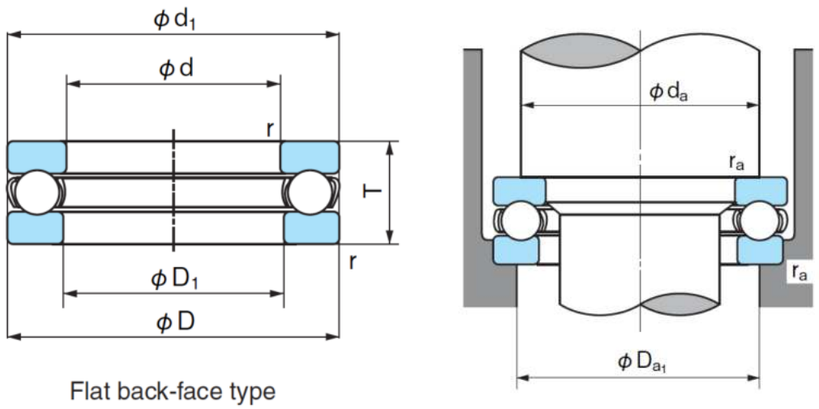

Flat back-face type

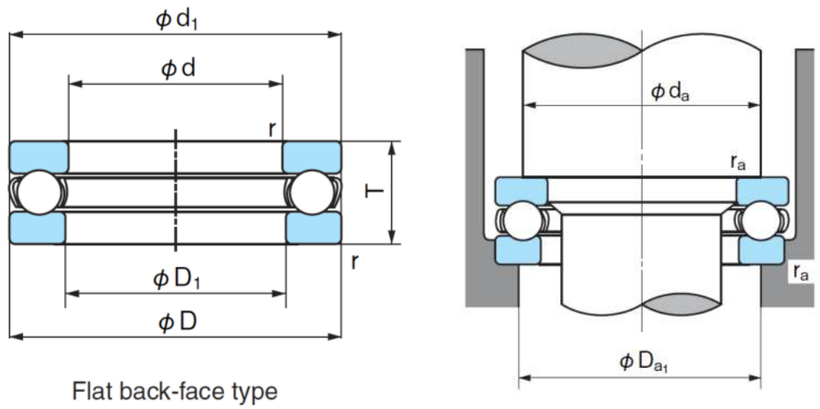

Flat back-face type

Boundary dimensions (mm)				Bearing No	Basic dynamic load rating Ca (N)	Basic static load rating Coa (N)	Limiting speed (min-1)			Dimensions (mm)		Abutment and fillet dimensions (mm)			Mass (kg) Reference	Bearing No
d	D	T	r (min)				Grease lubrication	Oil lubrication		D1 (min)	d1 (max)	da (min)	Da1 (max)	ra (max)	Flat back face type	
10	24	9	0.3	51100	10000	14000	6800	10000		11	24	18	16	0.3	0.020	51100
12	26	9	0.3	51101	10300	15400	6500	9800		13	26	20	18	0.3	0.022	51101
15	28	9	0.3	51102	10500	16800	6200	9400		16	28	23	20	0.3	0.024	51102
17	30	9	0.3	51103	10800	18200	6000	9100		18	30	25	22	0.3	0.028	51103
20	35	10	0.3	51104	14300	24700	5300	8000		21	35	29	26	0.3	0.040	51104
25	42	11	0.6	51105	19500	37000	4600	6900		26	42	35	32	0.6	0.059	51105
30	47	11	0.6	51106	20400	42000	4300	6500		32	47	40	37	0.6	0.068	51106
35	52	12	0.6	51107	20400	44500	4000	6000		37	52	45	42	0.6	0.085	51107
40	60	13	0.6	51108	26900	63000	3500	5300		42	60	52	48	0.6	0.120	51108
45	65	14	0.6	51109	27800	69000	3300	4900		47	65	57	53	0.6	0.150	51109
50	70	14	0.6	51110	28800	75500	3100	4700		52	70	62	58	0.6	0.160	51110
55	78	16	0.6	51111	35000	93000	2800	4200		57	78	69	64	0.6	0.240	51111
60	85	17	1	51112	41500	113000	2600	3900		62	85	75	70	1	0.290	51112
65	90	18	1	51113	41500	117000	2400	3700		67	90	80	75	1	0.340	51113
70	95	18	1	51114	43000	127000	2400	3600		72	95	85	80	1	0.360	51114
75	100	19	1	51115	44500	136000	2200	3400		77	100	90	85	1	0.420	51115
80	105	19	1	51116	44500	141000	2200	3300		82	105	95	90	1	0.430	51116
85	110	19	1	51117	46000	150000	2100	3200		87	110	100	95	1	0.460	51117
90	120	22	1	51118	59500	190000	1900	2900		92	120	108	102	1	0.680	51118
100	135	25	1	51120	85000	268000	1700	2500		102	135	121	114	1	0.990	51120
120	155	25	1	51124	89000	305000	1600	2400		122	155	141	134	1	1.16	51124
140	180	31	1	51128	107000	375000	1300	1900		142	178	164	156	1	2.03	51128

Every effort has been taken to ensure that the data listed in this catalogue is correct.
Finer Power Transmissions P/L will not accept liability for any damage or loss caused as a result of the data in this catalogue.

Every effort has been taken to ensure that the data listed in this catalogue is correct.
Finer Power Transmissions P/L will not accept liability for any damage or loss caused as a result of the data in this catalogue.

NACHI
Finer Power Transmissions P/L | www.finerpt.com

NACHI
Finer Power Transmissions P/L | www.finerpt.com

Thrust Ball Bearings
51200 Series

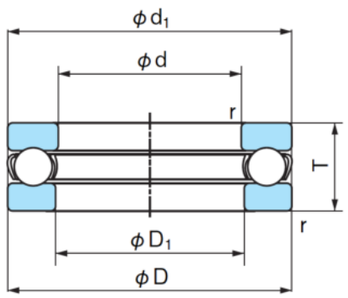

Flat back-face type

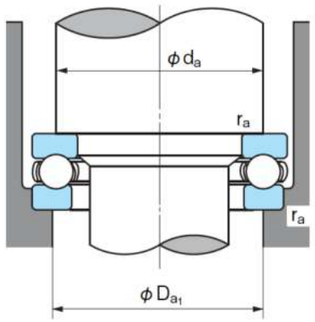

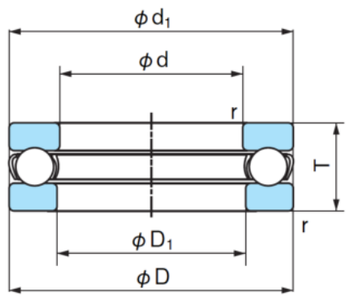

Flat back-face type

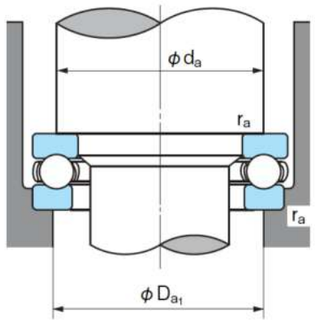

Boundary dimensions (mm)				Bearing No	Basic dynamic load rating Ca (N)	Basic static load rating Coa (N)	Limiting speed (min-1)			Dimensions (mm)		Abutment and fillet dimensions (mm)			Mass (kg) Reference	Bearing No
d	D	T	r (min)				Grease lubrication	Oil lubrication		D1 (min)	d1 (max)	da (min)	Da1 (max)	ra (max)	Flat backface type	
10	26	11	0.6	51200	12700	17100	5900	8800		12	26	20	16	0.6	0.030	51200
12	28	11	0.6	51201	13200	19000	5600	8500		14	28	22	18	0.6	0.034	51201
15	32	12	0.6	51202	16600	24800	5100	7600		17	32	25	22	0.6	0.046	51202
17	35	12	0.6	51203	17100	27300	4800	7300		19	35	28	24	0.6	0.053	51203
20	40	14	0.6	51204	22200	37500	4200	6300		22	40	32	28	0.6	0.082	51204
25	47	15	0.6	51205	27800	50500	3700	5600		27	47	38	34	0.6	0.120	51205
30	52	16	0.6	51206	29300	58000	3400	5200		32	52	43	39	0.6	0.150	51206
35	62	18	1	51207	39000	78000	2900	4400		37	62	51	46	1	0.220	51207
40	68	19	1	51208	47000	98500	2700	4100		42	68	57	51	1	0.270	51208
45	73	20	1	51209	47500	105000	2600	3900		47	73	62	56	1	0.320	51209
50	78	22	1	51210	48500	112000	2400	3600		52	78	67	61	1	0.390	51210
55	90	25	1	51211	69500	159000	2100	3100		57	90	76	69	1	0.610	51211
60	95	26	1	51212	73500	179000	2000	3000		62	95	81	74	1	0.690	51212
65	100	27	1	51213	75000	189000	1900	2800		67	100	86	79	1	0.770	51213
70	105	27	1	51214	76000	199000	1800	2800		72	105	91	84	1	0.810	51214
85	125	31	1	51217	95500	264000	1600	2400		88	125	109	101	1	1.29	51217
100	150	38	1.1	51220	146000	410000	1300	1900		103	150	130	120	1	2.36	51220
110	160	38	1.1	51222	152000	450000	1200	1900		113	160	140	130	1	2.57	51222

Every effort has been taken to ensure that the data listed in this catalogue is correct.
Finer Power Transmissions P/L will not accept liability for any damage or loss caused as a result of the data in this catalogue.

Every effort has been taken to ensure that the data listed in this catalogue is correct.
Finer Power Transmissions P/L will not accept liability for any damage or loss caused as a result of the data in this catalogue.

NACHI
Finer Power Transmissions P/L | www.finerpt.com
Thrust Ball Bearings
51300 Series

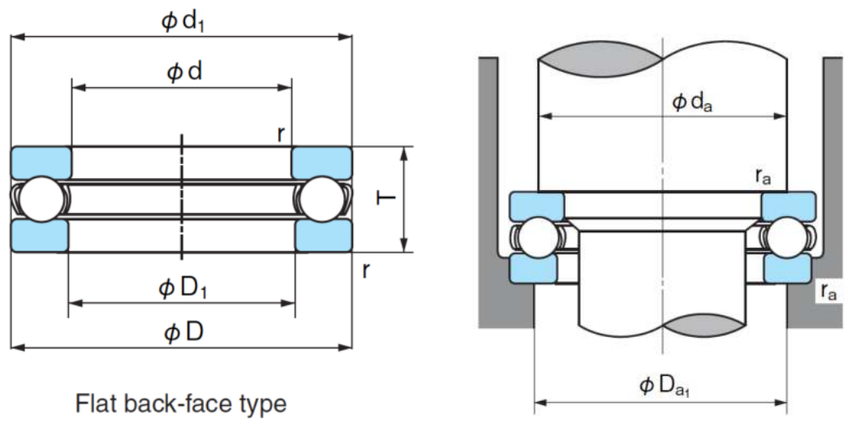

Flat back-face type

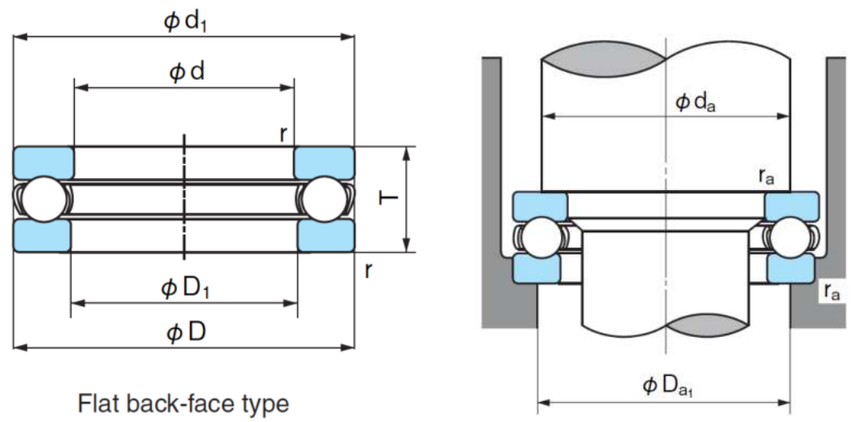

Flat back-face type

Boundary dimensions (mm)				Bearing No	Basic dynamic load rating Ca (N)	Basic static load rating Coa (N)	Limiting speed (min-1)			Dimensions (mm)		Abutment and fillet dimensions (mm)			Mass (kg) Reference	Bearing No
d	D	T	r (min)				Grease lubrication	Oil lubrication		D1 (min)	d1 (max)	da (min)	Da1 (max)	ra (max)	Flat backface type	
25	52	18	1	51305	35500	61500	3200	4900		27	52	41	36	1	0.180	51305
30	60	21	1	51306	42500	78500	2800	4200		32	60	48	42	1	0.270	51306
35	68	24	1	51307	55500	105000	2400	3700		37	68	55	48	1	0.390	51307
40	78	26	1	51308	69000	135000	2200	3300		42	78	63	55	1	0.550	51308
45	85	28	1	51309	80000	163000	2000	3000		47	85	69	61	1	0.690	51309
50	95	31	1.1	51310	96500	202000	1800	2700		52	95	77	68	1	1.00	51310
60	110	35	1.1	51312	123000	267000	1600	2400		62	110	90	80	1	1.43	51312
65	115	36	1.1	51313	127000	287000	1500	2300		67	115	95	85	1	1.57	51313
90	155	50	1.5	51318	213000	525000	1100	1600		93	155	129	116	1.5	3.88	51318

Every effort has been taken to ensure that the data listed in this catalogue is correct.
Finer Power Transmissions P/L will not accept liability for any damage or loss caused as a result of the data in this catalogue.
Every effort has been taken to ensure that the data listed in this catalogue is correct.
Finer Power Transmissions P/L will not accept liability for any damage or loss caused as a result of the data in this catalogue.

NACHI
Finer Power Transmissions P/L | www.finerpt.com
Thrust Ball Bearings
Inch Series "0"

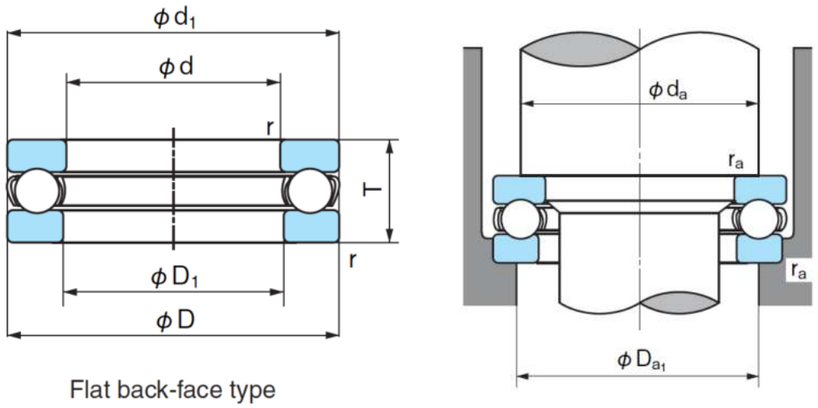

Flat back-face type

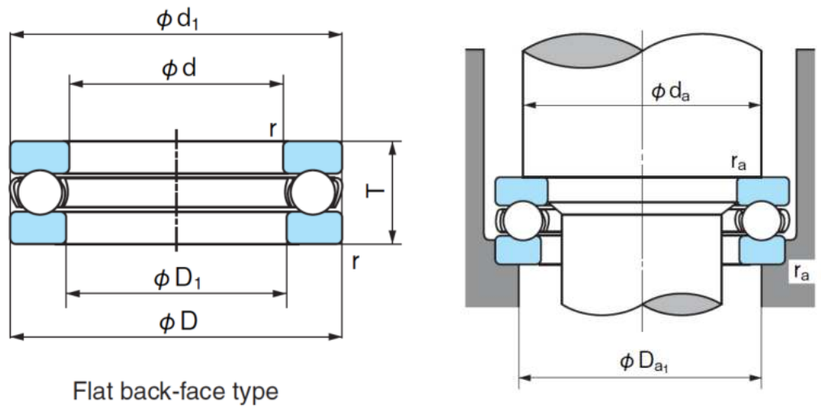

Flat back-face type

d		Boundary dimensions (mm)			Bearing No.	Basic dynamic load rating Ca (N)	Basic Static Load Rating	Limiting Speed (min-1)			Dimensions (mm)		Abutment and fillet dimensions (mm)			Mass (kg) Reference	Bearing No.
inch	mm	D	T	r (min)		Ca (N)	Coa (N)	Grease	Oil		D1 (min)	d1 (max)	da (min)	Da (max)	ra (max)		
5/8	15.875	35.719	15.875	0.8	0-5	19400	28300	4100	6200		16.272	34.925	27.8	23.8	0.8	0.086	0-5
3/4	19.05	38.894	15.875	0.8	0-6	21400	34500	4000	6000		19.447	38.1	27.8	23.8	0.8	0.095	0-6
7/8	22.225	42.069	15.875	0.8	0-7	21900	37500	3800	5800		22.622	41.275	34	30	0.8	0.1	0-7
1	25.4	45.244	15.875	1.6	0-8	22500	41000	3700	5500		25.797	44.45	37	33	0.8	0.11	0-8
1 1/8	28.575	48.419	15.875	1.6	0-9	24100	47000	3600	5400		28.972	47.625	40	37	0.8	0.128	0-9
1 1/4	31.75	53.181	18.256	1.6	0-10	27900	54500	3200	4800		32.147	52.388	45	40	0.8	0.164	0-10
1 3/8	34.925	56.356	18.256	1.6	0-11	28600	58000	3100	4600		35.322	55.562	48	43	0.8	-	0-11
1 1/2	38.1	59.531	18.256	1.6	0-12	30500	66000	3000	4500		38.497	58.738	51	47	1	0.2	0-12
1 5/8	41.275	62.706	18.256	1.6	0-13	26700	63000	2900	4400		41.672	61.912	54	50	1	0.21	0-13
1 3/4	44.45	68.262	19.05	1.6	0-14	32500	77500	2700	4100		44.847	67.469	59	54	1	0.26	0-14
1 7/8	47.625	71.438	19.05	1,6	0-15	37500	89000	2700	4000		48.0.21	70.644	62	57	1	0.285	0-15
2	50.8	75.406	19.05	2.4	0-16	38000	94000	2600	3900		51.594	74.613	66	61	1	0.3	0-16
2 1/8	53.975	81.756	22.225	2.4	0-17	49500	118000	2300	3500		54.769	80.962	71	65	1.6	0.405	0-17
2 1/4	57.15	84.931	22.225	2.4	0-18	50500	125000	2300	3400		57.944	84.138	74	68	1.6	0.45	0-18

Every effort has been taken to ensure that the data listed in this catalogue is correct.
Finer Power Transmissions P/L will not accept liability for any damage or loss caused as a result of the data in this catalogue.
Every effort has been taken to ensure that the data listed in this catalogue is correct.
Finer Power Transmissions P/L will not accept liability for any damage or loss caused as a result of the data in this catalogue.

NACHI
Finer Power Transmissions P/L | www.finerpt.com

NACHI
Finer Power Transmissions P/L | www.finerpt.com

Angular Contact Ball Bearings
5200 - 5300 Series

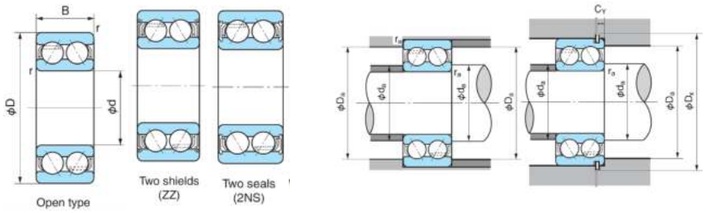

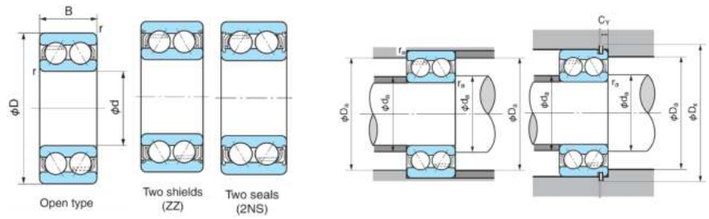

5200 Series																													
				Bearing No.					Basic dynamic load rating Cr (N)	Basic static load rating Cor (N		Limiting speed (min-1)		Dimensions of snap ring groove and snap ring (mm)					Abutment and fillet dimensions (mm)					Mass (kg)	Bearing No.
d	D	B	r (min)	Open type	Shield type	Seal type	With snap ring groove*	With snap ring*				Grease No. lubrication	Oil lubrication	D1 (max)	a (max)	b (min)	D2 (max)	f (max)	da (min)	Da (max)	Dx (min)	ra (max)	CY (max)		
10	30	14.3	0.6	5200	5200ZZ	5200-2NS	5200N	5200NR	7300	4000		18000	24000	28.17	2.06	1.35	34.7	1.12	15	25	35.5	0.6	2.9	0.05	5200
12	32	15.9	0.6	5201	5201ZZ	5201-2NS	5201N	5201NR	10700	5950		16000	22000	30.15	2.06	1.35	36.7	1.12	17	27	37.5	0.6	2.9	0.06	5201
15	35	15.9	0.6	5202	5202ZZ	5202-2NS	5202N	5202NR	11900	7200		14000	19000	33.17	2.06	1.35	39.7	1.12	20	30	40.5	0.6	2.9	0.07	5202
17	40	17.5	0.6	5203	5203ZZ	5203-2NS	5203N	5203NR	15000	9250		12000	17000	38.1	2.06	1.35	44.6	1.12	22	35	45.5	0.6	2.9	0.09	5203
20	47	20.6	1	5204	5204ZZ	5204-2NS	5204N	5204NR	20000	12700		10000	14000	44.6	2.46	1.35	52.7	1.12	26	41	53.5	1	3.3	0.12	5204
25	52	20.6	1	5205	5205ZZ	5205-2NS	5205N	5205NR	21800	15100		9500	13000	49.73	2.46	1.35	57.9	1.12	31	46	58.5	1	3.3	0.19	5205
30	62	23.8	1	5206	-	-	5206N	5206NR	30500	21700		8000	11000	59.61	3.28	1.9	67.7	1.7	36	56	68.5	1	4.7	0.29	5206
30	62	23.8	1	-	5206ZZ	5206-2NS	-	-	25900	18700		8000	-	-	-	-	-	-	36	56	-	1	-	0.29	5206
35	72	27	1.1	5207	-	-	5207N	5207NR	40000	29500		7000	9500	68.81	3.28	1.9	78.6	1.7	42	65	80	1	4.7	0.43	5207
35	72	27	1.1	-	5207ZZ	5207-2NS	-	-	35000	25900		7000	-	-	-	-	-	-	42	65	-	1	-	0.43	5207
40	80	30.2	1.1	5208	-	-	5208N	5208NR	45500	34000		6000	8000	76.81	3.28	1.9	86.6	1.7	47	73	88	1	4.7	0.57	5208
40	80	30.2	1.1	-	5208ZZ	5208-2NS	-	-	40000	30500		6000	-	-	-	-	-	-	47	73	-	1	-	0.57	5208
45	85	30.2	1.1	5209	-	-	5209N	5209NR	51000	39000		5500	7500	81.81	3.28	1.9	91.6	1.7	52	78	93	1	4.7	0.62	5209
45	85	30.2	1.1	-	5209ZZ	5209-2NS	-	-	42500	34500		5500	-	-	-	-	-	-	52	78	-	1	-	0.62	5209
50	90	30.2	1.1	5210	-	-	5210N	5210NR	54500	44500		5000	6700	86.79	3.28	2.7	96.5	2.46	57	83	98	1	5.4	0.67	5210
50	90	30.2	1.1	-	5210ZZ	5210-2NS	-	-	45000	39000		5000	-	-	-	-	-	-	57	83	-	1	-	0.67	5210
55	100	33.3	1.5	5211	-	-	5211N	5211NR	67500	56500		4500	6300	96.8	3.28	2.7	106.5	2.46	64	91	108	1.5	5.4	0.96	5211
55	100	33.3	1.5	-	5211ZZ	-	-	-	57500	50500		4500	-	-	-	-	-	-	64	91	91	1.5	-	0.96	5211
60	110	36.5	1.5	5212	-	-	5211N	5211NR	67500	56500		4300	5600	106.81	3.28	2.7	116.6	2.46	69	101	118	1.5	5.4	1.36	5212
60	110	36.5	1.5	-	5212ZZ	-	-	-	67000	57500		4300	-	-	-	-	-	-	69	101	-	1.5	-	1.36	5212
65	120	38.1	1.5	5213	-	-	5213N	5213NR	89000	77000		3900	5300	115.21	4.06	3.1	129.7	2.82	74	111	131.5	1.5	6.5	1.66	5213
65	120	38.1	1.5	-	5213ZZ	-	-	-	78500	71000		3900	-	-	-	-	-	-	74	111	-	1.5	-	1.66	5213
70	125	39.7	1.5	-	5214ZZ	-	-	-	86000	79000		3800	-	-	-	-	-	-	79	116	-	1.5	-	1.82	5214
75	130	41.3	1.5	-	5215ZZ	-	-	-	94000	87000		3400	-	-	-	-	-	-	84	121	-	1.5	-	1.91	5215
80	140	44.4	2	5216	-	-	5216N	5216NR	104000	94000		3500	4600	135.23	4.9	3.1	149.7	2.82	90	130	152	2	7.4	2.48	5216
20	52	22.2	1.1	5304	-	-	5304N	5304NR	21700	13300		9000	11000	49.73	2.46	1.35	57.9	1.12	27	45	58.5	1	3.3	0.23	5304

* Not a stocked range although available on request. .

5300 Series																													
				Bearing No.					Basic dynamic load rating Cr (N)	Basic static load rating Cor (N		Limiting speed (min-1)		Dimensions of snap ring groove and snap ring (mm)					Abutment and fillet dimensions (mm)					Mass (kg)	Bearing No.
d	D	B	r (min)	Open type	Shield type	Seal type	With snap ring groove*	With snap ring*				Grease No. lubrication	Oil lubrication	D1 (max)	a (max)	b (min)	D2 (max)	f (max)	da (min)	Da (max)	Dx (min)	ra (max)	CY (max)		
25	62	25.4	1.1	5305	-	-	5305N	5305NR	32000	21600		7300	10000	59.61	3.28	1.9	67.7	1.7	32	55	68.5	1	4.7	0.34	5305
30	72	30.2	1.1	5306	-	-	5306N	5306NR	41500	29000		7000	9500	68.81	3.28	1.9	78.6	1.7	37	65	80	1	4.7	0.51	5306
35	80	34.9	1.5	5307	-	-	5307N	5307NR	52000	37000		6300	8500	76.81	3.28	1.9	86.6	1.7	44	71	88	1.5	4.7	0.79	5307
40	90	36.5	1.5	5308	-	-	5308N	5308NR	63500	46500		5500	7500	86.79	3.28	2.7	96.5	2.46	49	81	98	1.5	5.4	1.05	5308
45	100	39.7	1.5	5309	-	-	5309N	5309NR	76500	56500		5000	6700	96.8	3.28	2.7	106.5	2.46	54	91	108	1.5	5.4	1.42	5309
50	110	44.4	2	5310	-	-	5310N	5310NR	90000	68000		4500	6000	106.81	3.28	2.7	116.6	2.46	60	100	118	2	5.4	1.93	5310
55	120	49.2	2	5311	-	-	5311N	5311NR	112000	86500		4000	5500	115.21	4.06	3.1	129.7	2.82	65	110	131.5	2	6.5	2.3	5311
60	130	54	2.1	5312	-	-	5312N	5312NR	128000	101000		3800	5000	125.22	4.06	3.1	139.7	2.82	72	118	141.5	2	6.5	3.16	5312
65	140	58.7	2.1	5313	-	-	5313N	5313NR	145000	115000		3600	4700	135.23	4.9	3.1	149.7	2.82	77	128	152	2	7.4	3.86	5313
70	150	63.5	2.1	5314	-	-	5314N	5314NR	163000	132000		3200	4300	145.24	4.9	3.1	159.7	2.82	82	138	162	2	7.4	4.88	5314

* Not a stocked range although available on request. .

Every effort has been taken to ensure that the data listed in this catalogue is correct.
Finer Power Transmissions P/L will not accept liability for any damage or loss caused as a result of the data in this catalogue.

Every effort has been taken to ensure that the data listed in this catalogue is correct.
Finer Power Transmissions P/L will not accept liability for any damage or loss caused as a result of the data in this catalogue.

NACHI
Finer Power Transmissions P/L | www.finerpt.com
Angular Contact Ball Bearings
7000 Series Angular Contact Precision

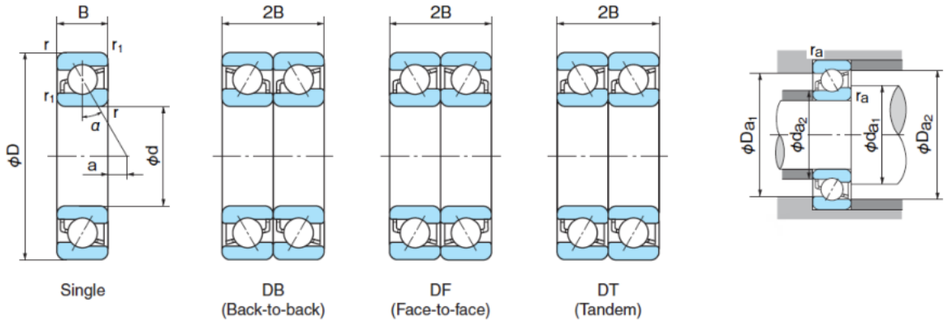

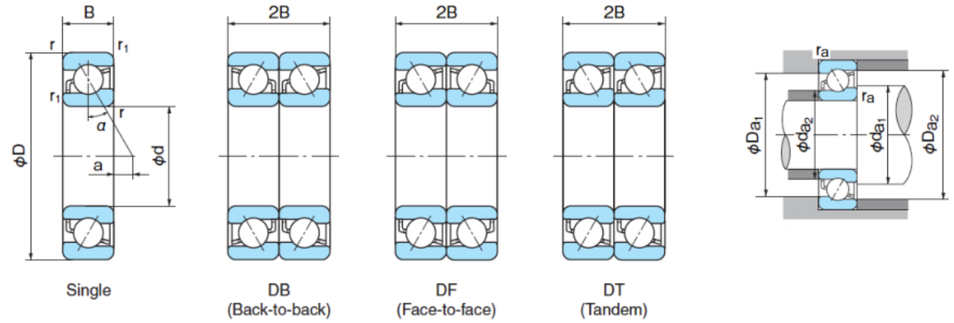

Boundary dimensions (mm)					Load center (mm)	Bearing No.				Basic dynamic load rating Cr (N)		Basic static load rating Cor (N)		Limiting speed (min-1)				Abutment and fillet dimensions (mm)						Mass (kg) Single	Bearing No.
														Grease lubrication		Oil lubrication									
d	D	B	r (min)	r1 (min)	a	Single	Duplex*			Single	Duplex	Single	Duplex	Single	Duplex	Single	Duplex	da1 (min)	da2 (min)	Da1 (max)	Da2 (max)	ra (max)	ra1 (max)		
12	28	8	0.3	0.15	−1.7	7001CYDU	7001CDB	7001CDF	7001CDT	5800	9450	2910	5800	40000	32000	55000	44000	14	14	26	27	0.3	0.15	0.024	7001C
15	32	9	0.3	0.15	−1.8	7002CYDU	7002CDB	7002CDF	7002CDT	6650	10800	3700	7450	34000	27000	47000	38000	17	17	30	31	0.3	0.15	0.035	7002C
17	35	10	0.3	0.15	−2.0	7003CYDU	7003CDB	7003CDF	7003CDT	7000	11400	4150	8300	31000	25000	42000	34000	19	19	33	34	0.3	0.15	0.045	7003C
20	42	12	0.6	0.3	−2.4	7004CYDU	7004CDB	7004CDF	7004CDT	11200	18200	6600	13200	26000	21000	35000	28000	24	24	38	40	0.6	0.3	0.079	7004C
25	47	12	0.6	0.3	−1.8	7005CYDU	7005CDB	7005CDF	7005CDT	12900	21000	8650	17300	22000	18000	31000	25000	29	29	43	45	0.6	0.3	0.091	7005C
30	55	13	1	0.6	−1.6	7006CYDU	7006CDB	7006CDF	7006CDT	16000	25900	11100	24000	19000	15000	26000	26000	35	35	60	52	1	0.6	0.135	7006C
35	62	14	1	0.6	−1.4	7007CYDU	7007CDB	7007CDF	7007CDT	19300	31000	13700	27500	16000	13000	23000	18000	40	40	57	59	1	0.6	0.17	7007C
40	68	15	1	0.6	−1.3	7008CYDU	7008CDB	7008CDF	7008CDT	20700	33500	16000	32000	15000	12000	20000	16000	45	45	63	65	1	0.6	0.21	7008C
45	75	16	1	0.6	−1.1	7009CYDU	7009CDB	7009CDF	7009CDT	24600	40000	19400	39000	13000	10000	18000	14000	50	60	70	72	1	0.6	0.265	7009C
50	80	16	1	0.6	−0.5	7010CYDU	7010CDB	7010CDB	7010CDT	26200	42500	22000	44000	12000	9600	17000	13000	55	55	75	77	1	0.6	0.285	7010C
55	90	18	1.1	0.6	−0.6	7011CYDU	7011CDB	7011CDF	7011CDT	34500	56000	28800	57500	11000	8800	15000	12000	61	61	84	86	1	0.6	0.42	7011C
60	95	18	1.1	0.6	−0.1	7012CYDU	7012CDB	7012CDF	7012CDT	35500	57500	30500	61500	10000	8000	14000	11000	66	66	89	91	1	0.6	0.45	7012C
65	100	18	1.1	0.6	0.5	7013CYDU	7013CDB	7013CDF	7013CDT	37500	60500	34500	69000	9700	7800	13000	10000	71	71	94	96	1	0.6	0.47	7013C
70	110	20	1.1	0.6	0.4	7014CYDU	7014CDB	7014CDF	7014CDT	47000	76500	43000	86500	8900	7100	12000	9600	76	76	104	106	1	0.6	0.66	7014C
75	115	20	1.1	0.6	0.1	7015CYDU	7015CDB	7015CDF	7015CDT	48500	78500	46000	92000	8400	6700	12000	9600	81	81	109	111	1	0.6	0.695	7015C
80	125	22	1.1	0.6	0.8	7016CYDU	7016CDB	7016CDF	7016CDT	59000	96000	55500	111000	7800	6200	11000	8800	86	86	119	121	1	0.6	0.925	7016C
85	130	22	1.1	0.6	1.4	7017CYDU	7017CDB	7017CDF	7017CDT	60500	98500	59000	118000	7400	5900	10000	8000	91	91	124	126	1	0.6	0.96	7017C
90	140	24	1.5	1	1.3	7018CYDU	7018CDB	7018CDF	7018CDT	72000	117000	69500	139000	7000	5600	9600	7800	97	97	133	135.6	1.5	1	1.26	7018C
95	145	24	1.5	1	22.6	7019	7019DB	7019DF	7019DT	67000	109000	66500	133000	3800	3100	5200	4200	102	102	138	140.6	1.5	1	1.36	7019
100	150	24	1.5	1	24.1	7020	7020DB	7020DF	7020DT	68500	111000	70500	141000	3600	2800	4800	3800	107	107	143	145.6	1.5	1	1.37	7020

CYDU – P4 Precision Type; Stocked & sold per set

* Not a stocked range although available on request. .

Every effort has been taken to ensure that the data listed in this catalogue is correct.
Finer Power Transmissions P/L will not accept liability for any damage or loss caused as a result of the data in this catalogue.
Every effort has been taken to ensure that the data listed in this catalogue is correct.
Finer Power Transmissions P/L will not accept liability for any damage or loss caused as a result of the data in this catalogue.

NACHI
Finer Power Transmissions P/L | www.finerpt.com

NACHI
Finer Power Transmissions P/L | www.finerpt.com

Angular Contact Ball Bearings
7200-7300 Series Angular Contact

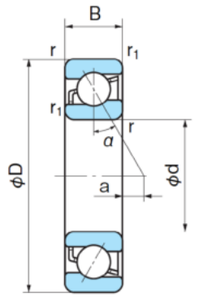

Single

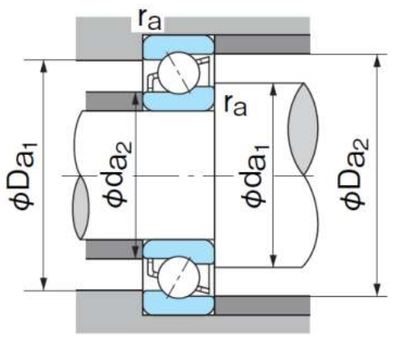

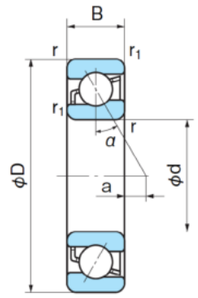

Single

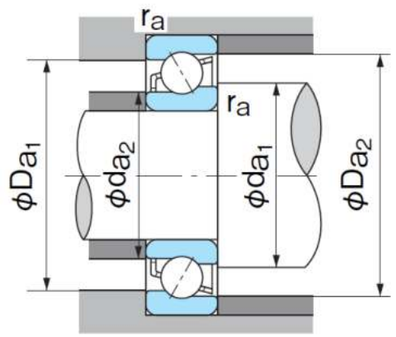

Boundary dimensions (mm)					Load center (mm)	Bearing No.				Basic dynamic load rating Cr (N)			Basic static load rating Cor (N)		Limiting speed (min-1)				Abutment and fillet dimensions (mm)						Mass (kg)	Bearing No.
															Grease lubrication		Oil lubrication								Single	
d	D	B	r (min)	r1 (min)	a	Single	Duplex*			Single	Duplex		Single	Duplex	Single	Duplex	Single	Duplex	da1 (min)	da2 (min)	Da1 (max)	Da2 (max)	ra (max)	ra1 (max)		
10	30	9	0.6	0.3	3.9	7200B	7200BDB	7200BDF	7200BDT	5150	8350		2570	5150	19000	16000	28000	22000	15	12	25	27.4	0.6	0.3	0.034	7200B
12	32	10	0.6	0.3	4.2	7201B	7201BDB	7201BDF	7201BDT	7200	11700		3800	7550	17000	15000	24000	20000	17	14	27	29.4	0.6	0.3	0.04	7201B
15	35	11	0.6	0.3	5	7202B	7202BDB	7202BDF	7202BDT	8600	14000		4500	8950	16000	12000	21000	17000	20	17	30	32.4	0.6	0.3	0.048	7202B
17	40	12	0.6	0.3	6	7203B	7203BDB	7203BDF	7203BDT	11300	18400		6300	12600	14000	11000	19000	15000	22	19	35	37.4	0.6	0.3	0.07	7203B
20	47	14	1	0.6	7.1	7204B	7204BDB	7204BDF	7204BDT	13700	22300		7850	15700	11000	9500	16000	13000	26	23	41	43.4	1	0.6	0.11	7204B
25	52	15	1	0.6	8.9	7205B	7205BDB	7205BDF	7205BDT	15300	24800		9700	19400	9500	8000	14000	11000	31	28	46	48.4	1	0.6	0.135	7205B
30	62	16	1	0.6	11.3	7206B	7206BDB	7206BDF	7206BDT	21200	34500		13900	27900	8500	7000	12000	9500	36	33	56	58.4	1	0.6	0.21	7206B
	72	19	1.1	0.6	11.9	7306B	7306BDB	7306BDF	7306BDT	32000	52000		21000	42000	7500	6100	10000	8500	37	35	65	67	1	0.6	0.36	7306B
35	72	17	1.1	0.6	14.1	7207B	7207BDB	7207BDF	7207BDT	28000	45500		19000	38000	7500	6000	10000	8000	42	40	65	67	1	0.6	0.295	7207B
	80	21	1.5	1	13.7	7307B	7307BDB	7307BDF	7307BDT	37500	61500		24900	49500	7000	5500	9500	7500	44	40	71	74.6	1.5	1	0.475	7307B
40	80	18	1.1	0.6	16.2	7208B	7208BDB	7208BDF	7208BDT	33000	54000		23700	47500	6700	5300	9200	7200	47	45	73	75	1	0.6	0.38	7208B
	90	23	1.5	1	15.8	7308B	7308BDB	7308BDF	7308BDT	46000	75000		31000	62500	6300	5000	8500	6700	49	45	81	84.6	1.5	1	0.655	7308B
45	85	19	1.1	0.6	17.8	7209B	7209BDB	7209BDF	7209BDT	37000	60500		27100	54000	6300	5000	8500	6700	52	50	78	80	1	0.6	0.43	7209B
	100	25	1.5	1	18	7309B	7309BDB	7309BDF	7309BDT	60000	97500		41500	82500	5600	4500	7500	6000	54	50	91	94.6	1.5	1	0.875	7309B
50	90	20	1.1	0.6	19.4	7210B	7210BDB	7210BDF	7210BDT	38500	63000		29600	59000	5600	4500	7500	6000	57	55	83	85	1	0.6	0.485	7210B
	110	27	2	1	20.1	7310B	7310BDB	7310BDF	7310BDT	70500	114000		49500	98500	5000	4000	6700	5300	60	56	100	104	2	1	1.14	7310B
55	100	21	1.5	1	22.1	7211B	7211BDB	7211BDF	7211BDT	48000	78000		37500	74500	5300	4000	7000	5500	64	60	91	94.6	1.5	1	0.635	7211B
	120	29	2	1	22.3	7311B	7311BDB	7311BDF	7311BDT	81000	132000		58000	116000	4500	3500	6200	5000	65	61	110	114	2	1	1.45	7311B
60	110	22	1.5	1	24.7	7212B	7212BDB	7212BDF	7212BDT	58000	94000		46000	92000	4800	3800	6300	5000	69	65	101	104.6	1.5	1	0.82	7212B
	130	31	2.1	1.1	24.4	7312B	7312BDB	7312BDF	7312BDT	92500	151000		67500	135000	4300	3400	5500	4500	72	67	118	123	2	1	1.81	7312B
65	120	23	1.5	1	27.4	7213B	7213BDB	7213BDF	7213BDT	66000	107000		54500	109000	4300	3400	5600	4600	74	70	111	114.6	1.5	1	1.02	7213B
	140	33	2.1	1.1	26.6	7313B	7313BDB	7313BDF	7313BDT	105000	170000		77500	155000	4000	3200	5300	4200	77	72	128	133	2	1	2.22	7313B
70	125	24	1.5	1	29	7214B	7214BDB	7214BDF	7214BDT	71500	116000		59500	120000	4300	3200	5600	4500	79	75	116	119.6	1.5	1	1.12	7214B
	150	35	2.1	1.1	28.7	7314B	7314BDB	7314BDF	7314BDT	118000	191000		88500	177000	3600	2900	4800	3900	82	77	138	143	2	1	2.7	7314B
75	130	25	1.5	1	30.6	7215B	7215BDB	7215BDF	7215BDT	74000	120000		64000	128000	4000	3200	5300	4300	84	80	121	124.6	1.5	1	1.23	7215B
	160	37	2.1	1.1	30.9	7315B	7315BDB	7315BDF	7315BDT	128000	208000		100000	200000	3400	2700	4500	3600	87	82	148	153	2	1	3.15	7315B
80	140	26	2	1	33.2	7216B	7216BDB	7216BDF	7216BDT	83500	135000		71500	143000	3600	2800	5000	4000	90	86	130	134	2	1	1.5	7216B
85	150	28	2	1	35.4	7217B	7217BDB	7217BDF	7217BDT	96500	159000		83500	168000	3400	2600	4500	3800	95	91	140	144	2	1	1.87	7217B

* Not a stocked range although available on request. .

Every effort has been taken to ensure that the data listed in this catalogue is correct.
Finer Power Transmissions P/L will not accept liability for any damage or loss caused as a result of the data in this catalogue.

Every effort has been taken to ensure that the data listed in this catalogue is correct.
Finer Power Transmissions P/L will not accept liability for any damage or loss caused as a result of the data in this catalogue.

NACHI
Finer Power Transmissions P/L | www.finerpt.com
Ball Screw Precision Angular Contact Bearings
TAB Series

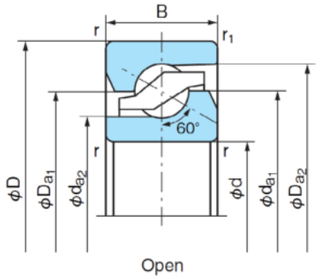

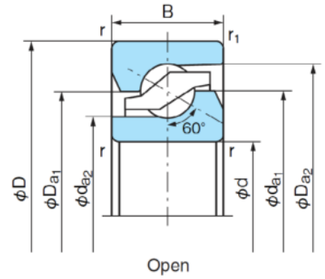

Boundary dimensions (mm)					Bearing No	Basic dynamic load rating (2) Ca(N)	Axial limiting load (3) Coa (N)		Limiting speed (min-1)		Starting torque (N - cm) Grease lubrication	Reference Dimensions (mm)				Mass (kg) Reference	Bearing No
d	D	B	r (min)	r1 (min)					Grease lubrication	Oil lubrication		da1 (min)	da2 (min)	Da1	Da2		
15	47	15	1(1)	0.6	15TAB04DU/GMP4	25900	32000		6300	8000	15	33.7	26.8	33.5	41	0.14	15TAB04DU/GMP4
17	47	15	1	0.6	17TAB04DU/GMP4	25900	32000		6300	8000	15	33.7	26.8	33.5	41	0.13	17TAB04DU/GMP4
20	47	15	1	0.6	20TAB04DU/GMP4	25900	32000		6300	8000	15	33.7	26.8	33.5	41	0.12	20TAB04DU/GMP4
25	62	15	1	0.6	25TAB06DU/GMP4	29900	46400		4650	6000	20	46.2	39.7	46	53.4	0.24	25TAB06DU/GMP4
30	62	15	1	0.6	30TAB06DU/GMP4	29900	46400		4650	6000	20	46.2	39.7	46	53.4	0.21	30TAB06DU/GMP4
35	72	15	1	0.6	35TAB07DU/GMP4	32500	54300		3750	5000	25	56.2	49.7	56	63.4	0.29	35TAB07DU/GMP4
40	72	15	1	0.6	40TAB07DU/GMP4	32500	54300		3750	5000	25	56.2	49.7	56	63.4	0.26	40TAB07DU/GMP4
45	100	20	1	0.6	45TAB10DU/GMP4	68000	113000		2850	3500	60	74.2	64.2	74	85.4	0.79	45TAB10DU/GMP4
50	100	20	1	0.6	50TAB10DU/GMP4	69500	119000		2700	3500	65	78.2	68.2	78	89.4	0.72	50TAB10DU/GMP4
55	120	20	1	0.6	55TAB12DU/GMP4	73000	137000		2300	3000	70	92.2	82.2	92	103.4	1.15	55TAB12DU/GMP4
60	120	20	1	0.6	60TAB12DU/GMP4	73000	137000		2300	3000	70	92.2	82.2	92	103.4	1.08	60TAB12DU/GMP4

BOOK 5: BEARINGS – NACHI
5.1 NACHI BEARINGS

Every effort has been taken to ensure that the data listed in this catalogue is correct.
Finer Power Transmissions P/L will not accept liability for any damage or loss caused as a result of the data in this catalogue.
Every effort has been taken to ensure that the data listed in this catalogue is correct.
Finer Power Transmissions P/L will not accept liability for any damage or loss caused as a result of the data in this catalogue.

NACHI
Finer Power Transmissions P/L | www.finerpt.com

Double Row Self Aligning Ball Bearings
1200 & 1300 & 2200 Series

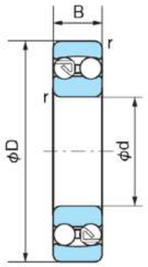

Cylindrical bore

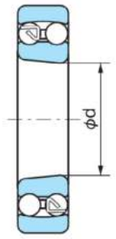

Tapered bore (Taper: 1:12)

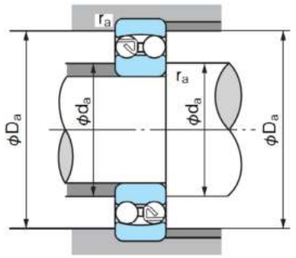

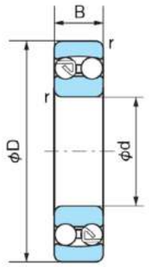

Cylindrical bore

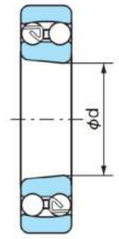

Tapered bore (Taper: 1:12)

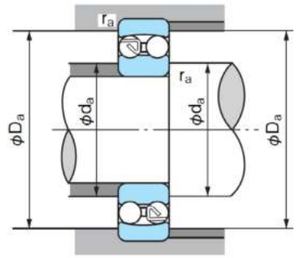

1200 Series

Boundary dimensions (mm)				Bearing No	Basic dynamic load rating Cr (N)	Basic static load rating Cor (N)		Limiting speed (min-1)		Axial load factor			Constant e	Abutment and fillet dimensions (mm)			Mass (kg)	Bearing No
d	D	B	r (min)	Cylindrical bore				Grease lubrication	Oil lubrication	Y1	Y2	Y0		da (min)	Da (max)	ra (max)	Cylindrical	
10	30	9	0.6	1200	5500	1200		23000	28000	1.92	2.97	2.01	0.33	14	26	0.6	0.034	1200
12	32	10	0.6	1201	5600	1250		21000	26000	1.89	2.93	1.98	0.33	16	28	0.6	0.04	1201
15	35	11	0.6	1202	7450	1750		18000	22000	1.9	2.95	2	0.33	19	31	0.6	0.049	1202
17	40	12	0.6	1203	7900	2000		16000	20000	2.03	3.14	2.12	0.31	21	36	0.6	0.073	1203
20	47	14	1	1204	9900	2600		14000	17000	2.16	3.35	2.27	0.29	25	42	1	0.12	1204
25	52	15	1	1205	12100	3300		12000	14000	2.28	3.52	2.39	0.28	30	47	1	0.141	1205
30	62	16	1	1206	15600	4650		9900	12000	2.55	3.94	2.67	0.25	35	57	1	0.22	1206
35	72	17	1.1	1207	15800	5100		8500	10000	2.71	4.2	2.84	0.23	41.5	65.5	1	0.323	1207
40	80	18	1.1	1208	19200	6500		7500	9200	2.83	4.38	2.97	0.22	46.5	73.5	1	0.417	1208
50	90	20	1.1	1210	22700	8100		6500	7900	3.07	4.76	3.22	0.21	56.5	83.5	1	0.525	1210
55	100	21	1.5	1211	26800	10000		5800	7100	3.19	4.94	3.34	0.2	63	92	1.5	0.705	1211
60	110	22	1.5	1212	30200	11500		5200	6400	3.37	5.22	3.53	0.19	68	102	1.5	0.9	1212
15	42	13	1	1302	9550	2300		16000	20000	1.86	2.88	1.95	0.34	20	37	1	0.094	1302

1300 Series

Boundary dimensions (mm)				Bearing No	Basic dynamic load rating Cr (N)	Basic static load rating Cor (N)		Limiting speed (min-1)		Axial load factor			Constant e	Abutment and fillet dimensions (mm)			Mass (kg)	Bearing No
d	D	B	r (min)	Cylindrical bore				Grease lubrication	Oil lubrication	Y1	Y2	Y0		da (min)	Da (max)	ra (max)	Cylindrical	
17	47	14	1	1303	12500	3200		14000	17000	1.92	2.97	2.01	0.33	22	42	1	0.13	1303
20	52	15	1.1	1304	12400	3300		13000	15000	2.12	3.28	2.22	0.3	26.5	45.5	1	0.163	1304
25	62	17	1.1	1305	18000	5000		9900	12000	2.31	3.57	2.42	0.27	31.5	55.5	1	0.257	1305
30	72	19	1.1	1306	21300	6300		8700	11000	2.4	3.72	2.52	0.26	36.5	65.5	1	0.387	1306
35	80	21	1.5	1307	25100	7850		7600	9300	2.48	3.84	2.6	0.25	43	72	1.5	0.51	1307
40	90	23	1.5	1308	29500	9700		6900	8400	2.57	3.98	2.69	0.25	48	82	1.5	0.715	1308
45	100	25	1.5	1309	38100	12700		6100	7500	2.56	3.95	2.68	0.25	53	92	1.5	0.957	1309
50	110	27	2	1310	43400	14100		5600	6800	2.7	4.17	2.83	0.23	59	101	2	1.21	1310
20	47	18	1	2204	12600	3300		14000	17000	1.31	2.02	1.37	0.48	25	42	1	0.14	2204
35	72	23	1.1	2207	21600	6600		8500	10000	1.71	2.65	1.79	0.37	41.5	65.5	1	0.403	2207

2200 Series

Boundary dimensions (mm)				Bearing No	Basic dynamic load rating Cr (N)	Basic static load rating Cor (N)		Limiting speed (min-1)		Axial load factor			Constant e	Abutment and fillet dimensions (mm)			Mass (kg)	Bearing No
d	D	B	r (min)	Cylindrical bore				Grease lubrication	Oil lubrication	Y1	Y2	Y0		da (min)	Da (max)	ra (max)	Cylindrical	
40	80	23	1.1	2208	22400	7400		7600	9300	1.92	2.96	2.01	0.33	46.5	73.5	1	0.505	2208
45	85	23	1.1	2209	23300	8150		7000	8500	2.09	3.23	2.19	0.3	51.5	78.5	1	0.545	2209
60	110	28	1.5	2212	34100	12600		5300	6500	2.26	3.49	2.36	0.28	68	102	1.5	1.09	2212

Every effort has been taken to ensure that the data listed in this catalogue is correct.
Finer Power Transmissions P/L will not accept liability for any damage or loss caused as a result of the data in this catalogue.

Every effort has been taken to ensure that the data listed in this catalogue is correct.
Finer Power Transmissions P/L will not accept liability for any damage or loss caused as a result of the data in this catalogue.

NACHI
Finer Power Transmissions P/L | www.finerpt.com
Double Row Self Aligning Ball Bearings
1200 & 1300 & 2200 Tapered Bore Series

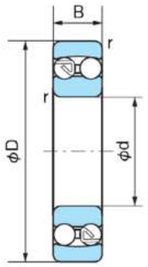

Cylindrical bore

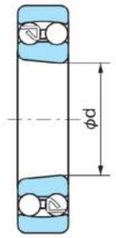

Tapered bore (Taper: 1:12)

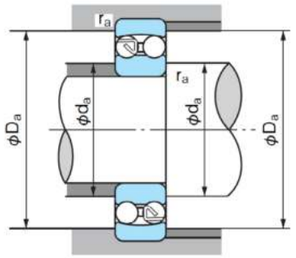

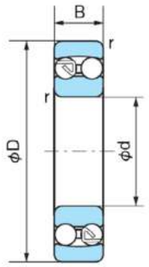

Cylindrical bore

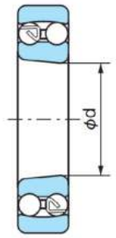

Tapered bore (Taper: 1:12)

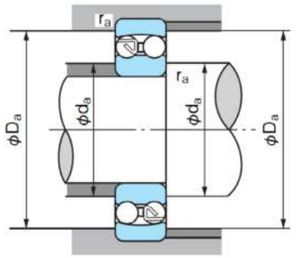

1200 Series

Boundary dimensions (mm) d	D	B	r (min)	Bearing No Tapered bore	Basic dynamic load rating Cr (N)	Basic static load rating Cor (N)		Limiting speed (min-1) Grease lubrication	Oil lubrication	Axial load factor Y1	Y2	Y0	Constant e	Abutment and fillet dimensions (mm) da (min)	Da (max)	ra (max)	Mass (kg) Cylindrical	Bearing No Tapered bore
25	52	15	1	1205K	12100	3300		12000	14000	2.28	3.52	2.39	0.28	30	47	1	0.141	1205K
30	62	16	1	1206K	15600	4650		9900	12000	2.55	3.94	2.67	0.25	35	57	1	0.22	1206K
35	72	17	1.1	1207K	15800	5100		8500	10000	2.71	4.2	2.84	0.23	41.5	65.5	1	0.323	1207K
40	80	18	1.1	1208K	19200	6500		7500	9200	2.83	4.38	2.97	0.22	46.5	73.5	1	0.417	1208K
45	85	19	1.1	1209K	21800	7350		7000	8500	2.94	4.56	3.09	0.21	51.5	78.5	1	0.465	1209K
50	90	20	1.1	1210K	22700	8100		6500	7900	3.07	4.76	3.22	0.21	56.5	83.5	1	0.525	1210K
55	100	21	1.5	1211K	26800	10000		5800	7100	3.19	4.94	3.34	0.2	63	92	1.5	0.705	1211K
65	120	23	1.5	1213K	31000	12500		4800	5800	3.67	5.68	3.84	0.17	73	112	1.5	1.15	1213K

1300 Series

Boundary dimensions (mm) d	D	B	r (min)	Bearing No Tapered bore	Basic dynamic load rating Cr (N)	Basic static load rating Cor (N)		Limiting speed (min-1) Grease lubrication	Oil lubrication	Axial load factor Y1	Y2	Y0	Constant e	Abutment and fillet dimensions (mm) da (min)	Da (max)	ra (max)	Mass (kg) Cylindrical	Bearing No Tapered bore
25	62	17	1.1	1305K	18000	5000		9900	12000	2.31	3.57	2.42	0.27	31.5	55.5	1	0.257	1305K
30	72	19	1.1	1306K	21300	6300		8700	11000	2.4	3.72	2.52	0.26	36.5	65.5	1	0.387	1306K
35	80	21	1.5	1307K	25100	7850		7600	9300	2.48	3.84	2.6	0.25	43	72	1.5	0.51	1307K
40	90	23	1.5	1308K	29500	9700		6900	8400	2.57	3.98	2.69	0.25	48	82	1.5	0.715	1308K
45	100	25	1.5	1309K	38100	12700		6100	7500	2.56	3.95	2.68	0.25	53	92	1.5	0.957	1309K
50	110	27	2	1310K	43400	14100		5600	6800	2.7	4.17	2.83	0.23	59	101	2	1.21	1310K
55	120	29	2	1311K	51300	17900		5000	6200	2.7	4.18	2.83	0.23	64	111	2	1.58	1311K
25	52	18	1	2205K	12600	3500		12000	15000	1.58	2.45	1.66	0.4	30	47	1	0.163	2205K

2200 Series

Boundary dimensions (mm) d	D	B	r (min)	Bearing No Tapered bore	Basic dynamic load rating Cr (N)	Basic static load rating Cor (N)		Limiting speed (min-1) Grease lubrication	Oil lubrication	Axial load factor Y1	Y2	Y0	Constant e	Abutment and fillet dimensions (mm) da (min)	Da (max)	ra (max)	Mass (kg) Cylindrical	Bearing No Tapered bore
30	62	20	1	2206K	15600	4650		10000	12000	1.79	2.77	1.87	0.35	35	57	1	0.26	2206K
35	72	23	1.1	2207K	21600	6600		8500	10000	1.71	2.65	1.79	0.37	41.5	65.5	1	0.403	2207K
45	85	23	1.1	2209K	23300	8150		7000	8500	2.09	3.23	2.19	0.3	51.5	78.5	1	0.545	2209K
55	100	25	1.5	2211K	26800	10000		5800	7100	2.35	3.64	2.47	0.27	63	92	1.5	0.81	2211K

Every effort has been taken to ensure that the data listed in this catalogue is correct.
Finer Power Transmissions P/L will not accept liability for any damage or loss caused as a result of the data in this catalogue.
Every effort has been taken to ensure that the data listed in this catalogue is correct.
Finer Power Transmissions P/L will not accept liability for any damage or loss caused as a result of the data in this catalogue.

Boundary Dimensions			Bearing No	Automotive Position
d	D	B		
12	42	10	12BC04S3C4	Pilot
15	40	14	15BC04S18SSU	Spigot
22	62	17	22BC06S5XNC2C3	Gearbox
25	59	24	25RT59SNC3	Gearbox
30	62	24/16	30BCDS2 (88506)	Rear-Wheel
30	75	20	30BCS19-2NSLN	Gearbox
30	75	21	30BCS36-2MT2NCS	Gearbox
30	72	23	30BCX1-2NSL2NRCS	Gearbox
30	55	23	30BG05S5G-2DS	Air-Con
30	52	20	30BG5220-2DSECS26	Air-Con
30	52	22	30BG5222-2DSECS20	Air-Con
30	52	20	30RFSNRW2CS/50	Gearbox
30	68	18	30RT06S3NR	Gearbox
30	75	20	30RT07A1NRC3	Gearbox
30.6	59	16.7	031BC05NC2C3	Gearbox
31	55	18	31RUKSNRC3	Gearbox
31	55	20	31RUKSS2NRC3	Gearbox
32	80	23	32BCS8-2MT2NCS	Gearbox
32	72	45	32BVV07-8G	Front-Wheel
34	64	22	34RUKS64NRC3	Gearbox
35	72	17/26	35BCD07S1CS46	Rear-Wheel
35	80	21/28	35BCD08S6CS	Rear-Wheel
35	85	23	35BCS17-2NSL2N	Gearbox
35	85	23	35BCS34-2MT2NC3	Gearbox
35	72	21	35BCV07S3C3	Gearbox
35	55	20	35BG05S16G-2DLCS	Air-Con
35	50	20	35BG05S7G-2DST	Air-Con
35	72	35	35BVV07X-6	Gearbox
35	72	35	35BVV07X-7-CCS	Gearbox
35	80	30	35KC802	Pinion
36	72	23	36RFSNRW2X5CS	Gearbox
37	60	23	37RUKS60NRC3	Gearbox
38	63	20	038RUSS1NR	Gearbox
38	74	36/33	38BVV07-26G	Front-Wheel
38	72	36/33	38BVV07-30GCS	Front-Wheel
38	68	34	68SCRN46P-3	Clutch-release
38	68	37.5	68SCRN48P-1	Clutch-release
38	68	47.5	68SCRN58P-5	Clutch-release
40	90	28/23	40BCV09S1-2NSLCS	Rear-Wheel
40	62	24	40BGS11G-2DS	Air-Con
40	74	42	40BVV07-10GCS	Front-Wheel
40	72	19.5	40KB722S266	Gearbox
40	62	20.625	712019	Air-Con
43	82	45	43BVV08-6GCS123	Front-Wheel
45	75	32	45BG07S5G-2DL	Air-Con
45	84	45	45BVV08-11GCS119	Front-Wheel
50	80	16	50BC08C3	Gearbox
50	80	22	50KB801LT	Side-Carrier
50	83	24	50KB8301	Side-Carrier

Every effort has been taken to ensure that the data listed in this catalogue is correct.
Finer Power Transmissions P/L will not accept liability for any damage or loss caused as a result of the data in this catalogue.