FINERPOWER
TRANSMISSIONS

Premium Bearings

EZO PRECISION BALL BEARINGS

FYH

JAF

IJK

Contents

7.1. PREMIUM EZO BEARINGS

Miniature Bearings - Metric 7.1.4
600, 620, 630 Series 7.1.4
680, 690 Series 7.1.4
MR Series 7.1.4
Imperial Ball Bearings 7.1.6
R Series 7.1.6
Stainless Steel Ball Bearings 7.1.8
6000 Stainless Steel Series 7.1.8
6200 Stainless Steel Series 7.1.8
6300 Stainless Steel Series 7.1.8
6800 Stainless Steel Series 7.1.9
6900 Stainless Steel Series 7.1.9
600 & 620 Stainless Steel Series 7.1.9
630 Stainless Steel Series 7.1.10
680 & 690 Stainless Steel Series 7.1.10

7.2. PREMIUM FYH BEARINGS

FYH Structure and Features 7.2.4
Structure 7.2.4
Features 7.2.4
Bearing Inserts 7.2.6
UC200 Series 7.2.6
NA200 Series 7.2.10
NA200 Triple Lip Series 7.2.12
NA300 Series 7.2.14
SA200 Series 7.2.16
SAA200 Series 7.2.18
SB200 Series 7.2.20
SBB200 Series 7.2.20
SU000 Silver Series 7.2.22
SC200 Series 7.2.22
SU000 Silver Series 7.2.23
UC200 Triple Lip Series 7.2.24
UC300 Series 7.2.28
ER200 Series 7.2.30
UCX00 Series 7.2.32
UC200 Stainless Steel Series 7.2.34
UK200 Series 7.2.36
UK300 Series 7.2.38
UKX00 Series 7.2.40
Bearing Housings 7.2.42
P200 Series 7.2.42
P300 Series 7.2.44
F200 Series 7.2.46
F300 Series 7.2.48
PA200 Series 7.2.50
PX00 Series 7.2.52
FX00 Series 7.2.54
LF200 Series 7.2.56
FL200 Series 7.2.58
FL300 Series 7.2.60
FB200 Series 7.2.62
P000 Silver Series 7.2.64
FL000 Silver Series 7.2.66
FC200 Series 7.2.68
FCX00 Series 7.2.70
T200 Series 7.2.72
T300 Series 7.2.74
Adapter Sleeves 7.2.76
H200 Series 7.2.76
H300 Series 7.2.77
H2300 Series 7.2.78
H3000 Series 7.2.79
H3100 Series 7.2.80
HE200 Series 7.2.81
HE300 Series 7.2.82
HE2300 Series 7.2.83
Interchange Charts 7.2.84
WIR Bearings 7.2.84
Bore Size Cross Reference 7.2.84
Wide Inner Ring Housings 7.2.86

Every effort has been taken to ensure that the data listed in this catalogue is correct.
Finer Power Transmissions P/L will not accept liability for any damage or loss caused as a result of the data in this catalogue.

Contents

7.3. PREMIUM JAF & IJK BEARINGS

Bearing Units

ISN Pillow Block (Dodge) 7.3.4

Double Row Angular Contact Ball Bearings

5200 - 5300 Series (JAF) 7.3.6

Double Row Self Aligning Ball Bearings

2200 Series (JAF) 7.3.7

Double Row Angular Contact Ball Bearings

5200 - 5300 Series (IJK) 7.3.8

Angular Contact Ball Beaings

7000 - 7900 Precision Series (IJK) 7.3.9

Double Row Self Aligning Ball Bearings

1200 & 1300 Series (IJK) 7.3.10

2200 & 2300 Series (IJK) 7.3.11

7.4. PREMIUM JAPANESE BEARINGS

Needle Roller Bearings 7.4.6

Shell Type - Metric 7.4.6
- TLA Open Series 7.4.6
- TLA - UU Rubber Seals Series 7.4.10
- TA Heavy Duty Series 7.4.12
- IRT Inner Ring Series 7.4.18

Shell Type - Imperial 7.4.22
- IRB Inner Ring Series 7.4.22
- BA Series w/Oil Hole 7.4.24
- BHA Heavy Duty w/Oil Hole Series 7.4.30

Machined Type - Imperial 7.4.32
- BR w/o Inner Ring Series 7.4.32
- BR UU Series 7.4.34

Machined Type - Metric 7.4.36
- RNA w/o Inner Ring Series 7.4.36
- RNA UU Rubber Sealed Series 7.4.38
- TAF w/o Inner Ring Series 7.4.40

Machined Type w/Inner Ring - Metric 7.4.46
- TAFI w/Inner Ring Series 7.4.46
- NA w/Inner Ring Series 7.4.50
- NA 4900UU Rubber Sealed w/Inner Ring Series 7.4.54
- NA 6900UU Rubber Sealed w/Inner Ring Series 7.4.56

Machined Type - Inner Rings 7.4.58
- LRT Series 7.4.58
- LRB Series 7.4.64

Needle Roller Thrust Bearings 7.4.66
- NTB Series & AS Washers To Suit 7.4.66

Thrust Needle Roller & Cage Assembly 7.4.68
- AZK Series & Outer (GS) & Inner (WS) Rings To Suit . . 7.4.68

Combined Needle Roller Bearings 7.4.70
- NATA/NATB Series 7.4.70

Needle Roller Cages - Metric 7.4.72

KT Cage Series 7.4.72

Cam Followers - Metric & Imperial 7.4.74

CF Series - Cage Type 7.4.74

CF Series - Full Complement 7.4.76

CR Series 7.4.78

Stainless Steel CF Series 7.4.82

NUCF Series 7.4.84

CRH Series 7.4.86

CFE Series 7.4.90

Roller Followers 7.4.92

Roller Followers - Imperial 7.4.92
- CRY-VUUR Non-Separable Full Complement Series . . 7.4.92

Roller Followers - Metric 7.4.94
- NART-UUR/VUUR Non-Separable Cage Series 7.4.94
- NAST-ZZUR Separable w/Inner Ring Cage Series 7.4.96
- NURT Non-Separable Cage Series 7.4.98

Sheave Roller Full Compliment 7.4.100

NAS5000 Series 7.4.100

Cylindrical Roller Full Compliment . . . 7.4.102

NAG 49UU Rubber Sealed Series 7.4.102

Spherical Plain Bearings 7.4.104

SB-A Metric Series 7.4.104

SBB-2RS Imperial Series 7.4.106

GE-G & GE-GS-2RS Heavy Duty Series 7.4.108

GE-E & GE-ES-2RS Series 7.4.110

GE-EC & GE-EC-2RS Series (PTFE Lined) 7.4.112

Rod Ends with Male Thread 7.4.114

POS Series (Metric Male) 7.4.114

POSB Series (Imperial Male) 7.4.115

Rod Ends with Female Thread 7.4.116

PHS Series (Metric Female) 7.4.116

PHSB Series (Imperial Female) 7.4.118

Interchange Charts 7.4.120

Spherical Plain Bearings 7.4.120

Rod Ends - Metric 7.4.120

Rod Ends - Imperial 7.4.122

Needle Roller Bearings 7.4.123

7.5. PREMIUM DEEP GROOVE BALL BEARINGS SPECIALS

Imperial Premium Ball Bearings 7.5.4

RLS & RMS Series 7.5.4

R Series 7.5.5

Non-Standard Bores 7.5.6

6200 Series 7.5.6

Wide Section Ball Bearings 7.5.8

Interchange Charts 7.5.8

Deep Groove Ball Bearings - Imperial 7.5.9

Every effort has been taken to ensure that the data listed in this catalogue is correct.
Finer Power Transmissions P/L will not accept liability for any damage or loss caused as a result of the data in this catalogue.

FINERPOWER TRANSMISSIONS

EZO PRECISION BALL BEARINGS

Premium Bearings - EZO

PREMIUM EZO BEARINGS

Miniature Bearings - Metric **7.1.4**
600, 620, 630 Series 7.1.4
680, 690 Series 7.1.4
MR Series 7.1.4
Imperial Ball Bearings **7.1.6**
R Series 7.1.6
Stainless Steel Ball Bearings **7.1.8**
6000 Stainless Steel Series 7.1.8
6200 Stainless Steel Series 7.1.8
6300 Stainless Steel Series 7.1.8
6800 Stainless Steel Series 7.1.9
6900 Stainless Steel Series 7.1.9
600 & 620 Stainless Steel Series 7.1.9
630 Stainless Steel Series 7.1.10
680 & 690 Stainless Steel Series 7.1.10

Every effort has been taken to ensure that the data listed in this catalogue is correct.
Finer Power Transmissions P/L will not accept liability for any damage or loss caused as a result of the data in this catalogue.

PRECISION BALL BEARINGS
Finer Power Transmissions P/L | www.finerpt.com

Miniature Bearings - Metric

600, 620, 630 Series | 680, 690 Series | MR Series

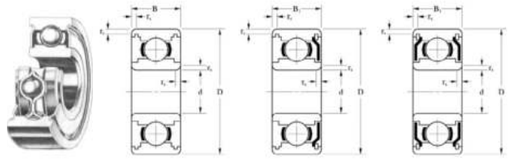

600, 620, 630 Series | 680, 690 Series | MR Series

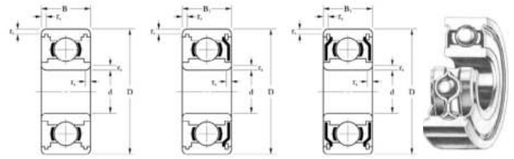

Bore Diameter: d		Outer Diameter: D		Chamfer rs (min)		Width B		Seal, Shield Bearings: Bearing Reference		Seal, Shield Bearings: Width: B1		Load Rating		Max Speed		Cage Type	Ball Complement			Weight (Reference)
								2 Shields	2 Seals			Cr (N)	Cor (N)	Grease	Oil		Qty.:Z	Size:Dw		2 Shields
mm	inch	mm	inch	mm	inch	mm	inch			mm	inch	(N)		x1000min -1			pcs.	mm	inch	g
3.0	0.118	6.0	0.236	0.10	0.004	2.0	0.079	MR63ZZ	-	2.5	0.098	209	73	81	96	W	8	0.800	0.032	0.26
		7.0	0.276	0.10	0.004	2.0	0.079	683ZZ	2RS	3.0	0.118	311	112	74	88	W	8	1.000	0.039	0.44
		8.0	0.315	0.15	0.006	2.5	0.098	MR83ZZ	-	3.0	0.118	395	140	67	79	J	7	1.200	0.047	0.65
		8.0	0.315	0.15	0.006	3.0	0.118	693ZZ	2RS	4.0	0.158	559	179	70	82	W,J,TW	6	1.588	0.063	0.78
		9.0	0.354	0.15	0.006	-	-	MR93ZZ	-	4.0	0.158	572	188	66	78	W	6	1.588	0.063	1.09
		10.0	0.394	0.15	0.006	4.0	0.158	623ZZ	2RS	4.0	0.158	633	218	66	78	J	7	1.588	0.063	1.67
4.0	0.158	7.0	0.276	0.10	0.004	-	-	MR74ZZ	-	2.5	0.098	255	107	71	83	W	11	0.800	0.032	0.31
		8.0	0.315	0.10	0.004	-	-	MR84ZZ	-	3.0	0.118	395	140	67	79	J,TW	7	1.200	0.047	0.51
		9.0	0.354	0.10	0.004	2.5	0.098	684ZZ	2RS*	4.0	0.158	641	226	63	75	W,J,TW	7	1.588	0.063	0.95
		10.0	0.394	0.20	0.008	-	-	MR104ZZ	2RS*	4.0	0.158	711	270	59	70	J	8	1.588	0.063	1.30
		11.0	0.433	0.15	0.006	4.0	0.158	694ZZ	2RS	4.0	0.158	959	347	57	67	J	7	2.000	0.079	1.61
		12.0	0.472	0.20	0.008	4.0	0.158	604ZZ	2RS	4.0	0.158	959	347	57	67	J	7	2.000	0.079	2.14
		13.0	0.512	0.20	0.008	5.0	0.197	624ZZ	2RS	5.0	0.197	1300	485	51	60	J	7	2.381	0.094	2.89
		16.0	0.630	0.30	0.012	5.0	0.197	634ZZ	2RS	5.0	0.197	1340	517	46	54	J	7	2.381	0.094	5.20
5.0	0.197	8.0	0.315	0.10	0.004	-	-	MR85ZZ	-	2.5	0.098	218	91	63	75	W	9	0.800	0.032	0.36
		9.0	0.354	0.15	0.006	2.5	0.098	MR95ZZ	-	3.0	0.118	432	168	60	71	W	8	1.200	0.047	0.58
		10.0	0.394	0.15	0.006	-	-	MR105ZZ	2RS*	4.0	0.158	432	168	60	71	W	8	1.200	0.047	1.23
		11.0	0.433	0.15	0.006	-	-	MR115ZZ	2RS*	4.0	0.158	716	283	54	64	J	8	1.588	0.063	1.54
		11.0	0.433	0.15	0.006	3.0	0.118	685ZZ	2RS	5.0	0.197	716	283	54	64	J,TW	8	1.588	0.063	1.83
		13.0	0.512	0.20	0.008	4.0	0.158	695ZZ	2RS	4.0	0.158	1080	430	50	59	J	8	2.000	0.079	2.28
		14.0	0.551	0.20	0.008	5.0	0.197	605ZZ	2RS	5.0	0.197	1330	507	48	56	J,TW	7	2.381	0.094	3.36
		16.0	0.630	0.30	0.012	5.0	0.197	625ZZ	2RS	5.0	0.197	1730	670	44	52	J,TW	7	2.778	0.109	4.53
		19.0	0.748	0.30	0.012	6.0	0.236	635ZZ	2RS	6.0	0.236	2340	889	38	45	J	6	3.500	0.138	8.11
6.0	0.236	10.0	0.394	0.10	0.004	-	-	MR106ZZ	-	3.0	0.118	497	218	55	64	W	10	1.200	0.047	0.71
		12.0	0.472	0.20	0.008	-	-	MR126ZZ	2RS*	4.0	0.158	716	293	50	59	W,J	8	1.588	0.063	1.57
		13.0	0.512	0.15	0.006	3.5	0.138	686ZZ	2RS	5.0	0.197	1080	438	48	56	J,TW	8	2.000	0.079	2.50
		15.0	0.591	0.20	0.008	5.0	0.197	696ZZ	2RS	5.0	0.197	1340	517	46	54	J	7	2.381	0.094	3.82
		17.0	0.669	0.30	0.012	6.0	0.236	606ZZ	2RS	6.0	0.236	2260	838	42	49	J	6	3.500	0.138	5.94
		19.0	0.748	0.30	0.012	6.0	0.236	626ZZ	2RS	6.0	0.236	2340	889	38	45	J,TW	6	3.500	0.138	7.70
		22.0	0.866	0.30	0.012	7.0	0.276	636ZZ	2RS	7.0	0.276	3300	1370	33	39	J	7	3.969	0.156	12.8
7.0	0.276	13.0	0.512	0.15	0.006	-	-	MR137ZZ	-	4.0	0.158	541	276	45	53	W	12	1.200	0.047	2.00
		14.0	0.551	0.15	0.006	3.5	0.138	687ZZ	2RS	5.0	0.197	1180	511	44	52	J	9	2.000	0.079	2.77
		17.0	0.669	0.30	0.012	5.0	0.197	697ZZ	2RS	5.0	0.197	1610	716	40	47	J,TW	9	2.381	0.094	5.03
		19.0	0.748	0.30	0.012	6.0	0.236	607ZZ	2RS	6.0	0.236	2340	889	38	45	J,TW	6	3.500	0.138	7.26
		22.0	0.866	0.30	0.012	7.0	0.276	627ZZ	2RS	7.0	0.276	3300	1370	33	39	J,TW	7	3.969	0.156	12.2
8.0	0.315	12.0	0.472	0.10	0.004	-	-	MR128ZZ	2RS*	3.5	0.138	544	275	46	54	W	12	1.200	0.047	1.01
		14.0	0.551	0.15	0.006	-	-	MR148ZZ	2RS*	4.0	0.158	818	386	42	50	J,TW	10	1.588	0.063	2.00
		16.0	0.630	0.20	0.008	4.0	0.158	688ZZ	2RS	5.0	0.197	1260	590	40	47	J	10	2.000	0.079	3.79
		19.0	0.748	0.30	0.012	6.0	0.236	698ZZ	2RS	6.0	0.236	2240	912	37	44	J	7	3.175	0.125	6.72
		22.0	0.866	0.30	0.012	7.0	0.276	608ZZ	2RS	7.0	0.276	3300	1370	33	39	J,TW	7	3.969	0.156	11.6
		24.0	0.945	0.30	0.012	8.0	0.315	628ZZ	2RS	8.0	0.315	3330	1410	31	37	J	7	3.969	0.156	17.2
		28.0	1.102	0.30	0.012	9.0	0.354	638ZZ	2RS	9.0	0.354	4580	1970	28	33	J	7	4.762	0.188	28.4
9.0	0.354	17.0	0.669	0.20	0.008	4.0	0.158	689ZZ	2RS	5.0	0.197	1330	664	37	44	J	11	2.000	0.079	4.12
		20.0	0.787	0.30	0.012	6.0	0.236	699ZZ	2RS	6.0	0.236	2470	1070	35	42	J	8	3.175	0.125	7.59
		24.0	0.945	0.30	0.012	7.0	0.276	609ZZ	2RS	7.0	0.276	3350	1430	30	36	J	7	3.969	0.158	14
		26.0	1.024	0.60	0.024	8.0	0.315	629ZZ	2RS	8.0	0.315	4580	1970	28	33	J	7	4.762	0.188	18.9

* Not a stocked range although available on request

Every effort has been taken to ensure that the data listed in this catalogue is correct.
Finer Power Transmissions P/L will not accept liability for any damage or loss caused as a result of the data in this catalogue.

Every effort has been taken to ensure that the data listed in this catalogue is correct.
Finer Power Transmissions P/L will not accept liability for any damage or loss caused as a result of the data in this catalogue.

PRECISION BALL BEARINGS
Finer Power Transmissions P/L | www.finerpt.com

Ball Bearings - Imperial

R Series

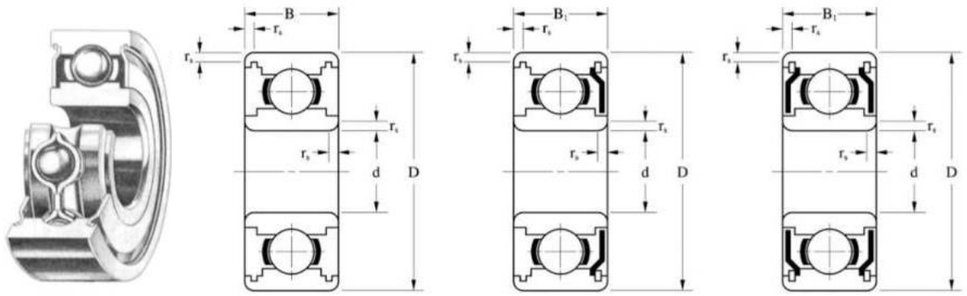

R Series

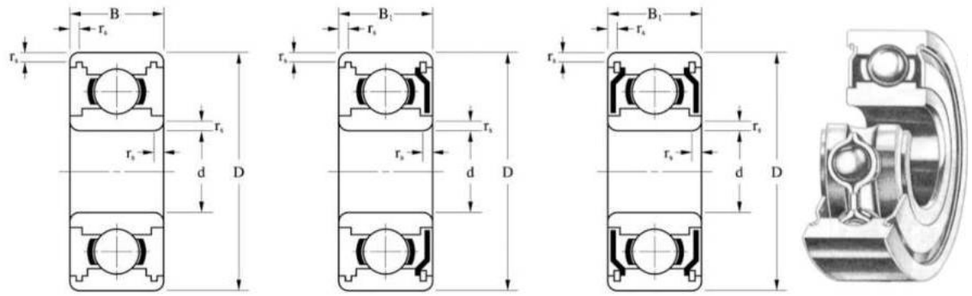

Bore Diameter: d		Outer Diameter: D		Chamfer rs (min)		Open Bearings IR Width: B		Open		Seal, Shield Bearings Bearing Reference 2 Shields	2 Seals	Width		Load Rating Cr (N)	Cor (N)	Max Speed Grease	Oil	Cage Type	Ball Complement Qty.:Z	Size:Dw		Weight (Reference) 2 Shields
mm	inch	mm	inch	mm	inch	mm	inch					mm	inch	(N)		x1000min -1			pcs.	mm	inch	g
3.175	0.125	9.525	0.375	0.30	0.012	3.967	0.156	R2		R2 ZZ	R2 2RS	3.967	0.156	633	218	66	78	J	7	1.588	0.063	1.39
4.762	0.188	12.700	0.500	0.30	0.012	3.967	0.156	R3		R3 ZZ	R3 2RS	4.978	0.196	1300	485	51	60	J	7	2.381	0.094	2.61
6.350	0.250	15.875	0.625	0.30	0.012	4.978	0.196	R4		R4 ZZ	R4 2RS	4.978	0.196	1480	617	42	50	J	8	2.381	0.094	4.19
6.350	0.250	19.050	0.750	0.40	0.016	5.558	0.219	R4A		R4A ZZ	R4A 2RS	7.142	0.281	2340	889	38	45	J	6	3.500	0.138	8.96
9.525	0.375	22.225	0.875	0.40	0.016	5.558	0.219	R6		R6 ZZ	R6 2RS	7.142	0.281	3330	1410	31	37	J	7	3.969	0.156	10.7
12.700	0.500	28.575	1.125	0.40	0.016	6.350	0.250	R8		R8 ZZ	R8 2RS	7.938	0.313	5110	2390	25	30	J	8	4.762	0.188	20.5
15.875	0.625	34.925	1.375	0.80	0.032	7.142	0.281	R10		R10 ZZ	R10 2RS	8.733	0.344	6000	3270	20	24	RJ	10	4.762	0.188	35.8
19.050	0.750	41.275	1.625	0.80	0.032	7.938	0.313	R12		R12ZZ	R12 2RS	11.113	0.438	7920	4450	17	21	RJ	10	5.556	0.219	69.3
25.4	1.000	50.8	2	-	-	-	-	R16		R16ZZ	R16 2RS	-	-	11976	5813	9	11	-	-	-	-	87

BOOK 7: BEARINGS – KOYO
7.1 PREMIUM EZO BEARINGS

Every effort has been taken to ensure that the data listed in this catalogue is correct.
Finer Power Transmissions P/L will not accept liability for any damage or loss caused as a result of the data in this catalogue.

Every effort has been taken to ensure that the data listed in this catalogue is correct.
Finer Power Transmissions P/L will not accept liability for any damage or loss caused as a result of the data in this catalogue.

6000 Stainless Steel Series

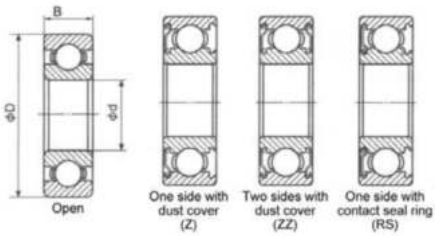

Part No.	d	D	B	Load Rating Cr(N)	Load Rating Cor(N)	N.W. (kg)
	mm					
SS6000-2RS	10	26	8	3 890	1 570	0.018
SS6001-2RS	12	28	8	4 350	1 910	0.020
SS6002-2RS	15	32	9	4 750	2 720	0.028
SS6003-2RS	17	35	10	5 100	2 610	0.038
SS6004-2RS	20	42	12	7 980	4 050	0.064
SS6005-2RS	25	47	12	8 550	4 680	0.077
SS6006-2RS	30	55	13	11 200	6 620	0.111
SS6007-2RS	35	62	14	13 600	8 240	0.146
SS6008-2RS	40	68	15	14 300	9 240	0.180
SS6009-2RS	45	75	16	17 800	12 100	0.233
SS6010-2RS	50	80	16	18 500	13 300	0.252

6200 Stainless Steel Series

Part No.	d	D	B	Load Rating Cr(N)	Load Rating Cor(N)	N.W. (kg)
	mm					
SS6200-2RS	10	30	9	4 350	1 910	0.030
SS6201-2RS	12	32	10	5 780	2 440	0.035
SS6202-2RS	15	35	11	6 490	2 980	0.044
SS6203-2RS	17	40	12	8 130	3 830	0.065
SS6204-2RS	20	47	14	10 900	5 320	0.104
SS6205-2RS	25	52	15	11 900	6 300	0.128
SS6206-2RS	30	62	16	16 500	9 070	0.193
SS6207-2RS	35	72	17	21 800	12 300	0.273
SS6208-2RS	40	80	18	24 700	14 300	0.354
SS6209-2RS	45	85	19	27 800	16 400	0.386
SS6210-2RS	50	90	20	29 800	18 600	0.446

6300 Stainless Steel Series

Part No.	d	D	B	Load Rating Cr(N)	Load Rating Cor(N)	N.W. (kg)
	mm					
SS6300-2RS	10	35	11	6 880	2 750	0.052
SS6301-2RS	12	37	12	8 250	3 350	0.058
SS6302-2RS	15	42	13	9 720	4 350	0.081
SS6303-2RS	17	47	14	11 600	5 290	0.111
SS6304-2RS	20	52	15	13 500	6 270	0.141
SS6305-2RS	25	62	17	17 500	9 000	0.232
SS6306-2RS	30	72	19	22 700	12 000	0.340
SS6307-2RS	35	80	21	28 300	15 400	0.432

Every effort has been taken to ensure that the data listed in this catalogue is correct.
Finer Power Transmissions P/L will not accept liability for any damage or loss caused as a result of the data in this catalogue.

6800 Stainless Steel Series

Part No.	d	D	B	Load Rating Cr(N)	Load Rating Cor(N)	N.W. (kg)
	mm					
SS6800-2RS	10	19	5	1 462	672	0.005
SS6801-2RS	12	21	5	1 632	832	0.006
SS6802-2RS	15	24	5	1 759	1 008	0.007
SS6803-2RS	17	26	5	1 895	1 168	0.008
SS6804-2RS	20	32	7	3 417	1 968	0.019
SS6805-2RS	25	37	7	3 655	2 352	0.022
SS6806-2RS	30	42	7	3 782	2 752	0.026
SS6807-2RS	35	47	7	4 029	3 056	0.029
SS6808-2RS	40	52	7	4 190	3 344	0.033
SS6809-2RS	45	58	7	5 278	4 304	0.04
SS6810-2RS	50	65	7	5 244	4 608	0.052

6900 Stainless Steel Series

Part No.	d	D	B	Load Rating Cr(N)	Load Rating Cor(N)	N.W. (kg)
	mm					
SS6900-2RS	10	22	6	2 295	1 016	0.009
SS6901-2RS	12	24	6	2 456	1 168	0.011
SS6902-2RS	15	28	7	3 680	1 800	0.016
SS6903-2RS	17	30	7	3 901	2 048	0.018
SS6904-2RS	20	37	9	5 423	2 944	0.036
SS6905-2RS	25	42	9	5 958	3 640	0.042
SS6906-2RS	30	47	9	6 154	4 008	0.045
SS6907-2RS	35	55	10	9 265	6 200	0.073
SS6908-2RS	40	62	12	11 645	7 936	0.108
SS6909-2RS	45	68	12	11 985	8 720	0.122
SS6910-2RS	50	72	12	12 325	9 360	0.125

600 & 620 Stainless Steel Series

Part No.		d	D	B	Load Rating Cr(N)	Load Rating Cor(N)	N.W. (kg)
Shielded	Rubber Sealed	mm					
SS604-ZZ	SS604-2RS	4	12	4	815	277	0.002
SS605-ZZ	SS605-2RS	5	14	5	1 130	405	0.004
SS606-ZZ	SS606-2RS	6	17	6	1 921	670	0.005
SS607-ZZ	SS607-2RS	7	19	6	1 989	711	0.008
SS608-ZZ	SS608-2RS	8	22	7	2 805	1 096	0.012
SS609-ZZ	SS609-2RS	9	24	7	2 847	1 144	0.014
SS623-ZZ	SS623-2RS	3	14	4	538	174	0.002
SS624-ZZ	SS624-2RS	4	13	5	1 105	388	0.003
SS625-ZZ	SS625-2RS	5	16	5	1 470	536	0.005
SS626-ZZ	SS626-2RS	6	19	6	1 989	711	0.008
SS627-ZZ	SS627-2RS	7	22	7	-	-	-
SS628-ZZ	SS628-2RS	8	24	8	2 830	1 128	0.01
SS629-ZZ	SS629-2RS	9	26	8	3 893	1 576	0.02

Every effort has been taken to ensure that the data listed in this catalogue is correct.
Finer Power Transmissions P/L will not accept liability for any damage or loss caused as a result of the data in this catalogue.

630 Stainless Steel Series

Part No.		d	D	B	N.W. (kg)
Shielded	Rubber Sealed	mm			
SS634-ZZ	SS634-2RS	4	16	5	0.004
SS635-ZZ	SS635-2RS	5	19	6	0.005
SS636-ZZ	SS636-2RS	6	22	7	0.006
SS638-ZZ	SS638-2RS	8	28	9	0.008

680 & 690 Stainless Steel Series

Part No.		d	D	B	N.W. (kg)
Shielded	Rubber Sealed	mm			
SS683-ZZ	SS683-2RS	3	7	3	0.002
SS685-ZZ	SS685-2RS	5	11	5	0.004
SS686-ZZ	SS686-2RS	6	13	5	0.005
SS687-ZZ	SS687-2RS	7	14	5	0.008
SS688-ZZ	SS688-2RS	8	16	4	0.012
SS689-ZZ	SS689-2RS	9	17	5	0.014
SS693-ZZ	SS693-2RS	3	8	3	0.002
SS694-ZZ	SS694-2RS	4	11	4	0.003
SS695-ZZ	SS695-2RS	5	13	4	0.005
SS696-ZZ	SS696-2RS	6	15	5	0.008
SS697-ZZ	SS697-2RS	7	17	5	0.01
SS698-ZZ	SS698-2RS	8	19	6	0.01
SS699-ZZ	SS699-2RS	9	20	6	0.02

Every effort has been taken to ensure that the data listed in this catalogue is correct.
Finer Power Transmissions P/L will not accept liability for any damage or loss caused as a result of the data in this catalogue.

FINERPOWER TRANSMISSIONS

FYH

Premium Bearings - FYH

PREMIUM FYH BEARINGS

FYH Structure and Features 7.2.4
Structure 7.2.4
Features 7.2.4
Bearing Inserts 7.2.6
UC200 Series 7.2.6
NA200 Series 7.2.10
NA200 Triple Lip Series 7.2.12
NA300 Series 7.2.14
SA200 Series 7.2.16
SAA200 Series 7.2.18
SB200 Series 7.2.20
SBB200 Series 7.2.20
SU000 Silver Series 7.2.22
SC200 Series 7.2.22
SU000 Silver Series 7.2.23
UC200 Triple Lip Series 7.2.24
UC300 Series 7.2.28
ER200 Series 7.2.30
UCX00 Series 7.2.32
UC200 Stainless Steel Series 7.2.34
UK200 Series 7.2.36
UK300 Series 7.2.38
UKX00 Series 7.2.40
Bearing Housings 7.2.42
P200 Series 7.2.42
P300 Series 7.2.44
F200 Series 7.2.46
F300 Series 7.2.48
PA200 Series 7.2.50
PX00 Series 7.2.52
FX00 Series 7.2.54
LF200 Series 7.2.56
FL200 Series 7.2.58
FL300 Series 7.2.60
FB200 Series 7.2.62
P000 Silver Series 7.2.64
FL000 Silver Series 7.2.66
FC200 Series 7.2.68
FCX00 Series 7.2.70
T200 Series 7.2.72
T300 Series 7.2.74
Adapter Sleeves 7.2.76
H200 Series 7.2.76
H300 Series 7.2.77
H2300 Series 7.2.78
H3000 Series 7.2.79
H3100 Series 7.2.80
HE200 Series 7.2.81
HE300 Series 7.2.82
HE2300 Series 7.2.83
Interchange Charts 7.2.84
WIR Bearings 7.2.84
Bore Size Cross Reference 7.2.84
Wide Inner Ring Housings 7.2.86

Every effort has been taken to ensure that the data listed in this catalogue is correct.
Finer Power Transmissions P/L will not accept liability for any damage or loss caused as a result of the data in this catalogue.

Structure

FYH Ball Bearing Units are manufactured to exacting standards comprising of grease sealed deep groove ball bearings and housings in various forms. Self-aligning units allow for easy installation and are supplied with grease fittings in order to facilitate quick and convenient re-lubrication.

Features

FYH Ball Bearing Units have many features and are available in various models. A wide selection of mounted units is offered to fit virtually any application.

1 Supreme load capacity and accuracy

FYH Ball Bearing Units feature an internal structure identical to single row deep groove ball bearings and can bear significant radial load, as well as a great deal of axial load in both directions. The hardened steel balls exhibit a high degree of "roundness" and the races are highly polished to accommodate a smooth ride at a wide range of speeds.

2 Rational self-aligning mechanism and optimal fit

FYH Ball Bearing Units have the special ability to self-align inside the housing because of the spherical shape of the outer diameter of the bearing insert and the concave shape of the inner diameter of the housing into which it fits. This design allows the bearing unit to self-adjust for shaft deviation and reduce abnormal bearing load. Therefore, the original rated life of the bearing can be guaranteed. Since the spherical outside surface of the bearing is precision ground and the spherical bore of the housing is machined by a boring machine with great accuracy, optimal fitting of the bearing and the housing can be obtained, as well as superior aligning performance. The allowable aligning angle of standard ball bearing units is 3°, while units with covers is 1°.

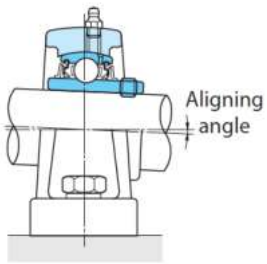

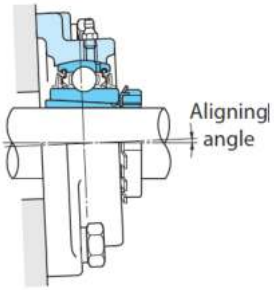

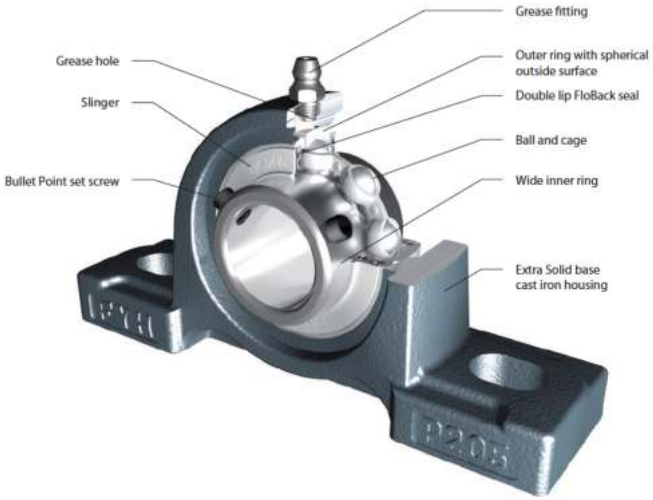

3 Superior sealing performance

FYH Ball Bearing Units efficiently prevent grease from leaking out of the interior of the bearing, and perform extremely well at keeping contaminates, such as dust and water, from entering. This is achieved by installing the seal to the outer ring of the bearing and installing the slinger to the inner ring of the bearing. The FloBack seal to be used in the standard FYH Ball Bearing units will contribute to the long life of the bearing. It consists of a double-lip seal which is stamped into place in the outer ring of the bearing to reduce the possibility of being pushed out from over-lubrication. The first seal makes contact with the inside of the slinger which provides the first line of defense against contamination. The next seal makes contact with the inner ring to provide another level of contamination resistance. An additional level of protection exists in the extra non-contact inward facing lip which allows grease to flow back towards the balls and raceways during operation thereby improving lubrication performance and extending bearing life. Allowable rotating speed is the same as the previous seal design while providing more than four times better protection.

4 Simple lubrication

FYH Ball Bearing Units are tapped to accept a grease fitting which is also supplied with every mounted unit. Bearings are pre-lubricated at the factory and do not require additional grease upon installation. When operating in excessively moist, dusty, or hot environments, it is recommended that grease be supplied at regular intervals. If appropriately maintained, the rated life of the bearing can be extended. FYH Lithium Bearing Grease to be sealed in early bearing grease use are manufactured to accommodate a wide range of operating conditions.

Every effort has been taken to ensure that the data listed in this catalogue is correct.
Finer Power Transmissions P/L will not accept liability for any damage or loss caused as a result of the data in this catalogue.

FYH Lithium Bearing Grease can be mixed with former FYH Bearing grease as it will improve performance, corrosion resistance, loading capability, and promote longer bearing life. The grease fittings that are supplied with FYH mounted units include 1/4-28 for smaller units and 1/8 PT for larger units. Additional styles are available upon request. FYH Lithium Bearing Grease is also available in automatic lubricators.

5 Highly rigid and rugged cast iron housings

FYH Ball Bearing Unit housings are designed so that they are optimized for reduction of deformation due to centralization of stress and load. Only the best material is selected to be cast by a highly advanced technique or press working technique, depending on the housing. Since any abnormal load on the bearing is eliminated by the housing, the life of the bearing can be extended. A Granular material baking finish coating (powder coating) helps resist corrosion and protect the surface of the housing for an extended period of time. FYH original solid base pillow block housings seat better and produce a more stable mounting configuration that significantly reduces vibration. The support ribs have been eliminated to make more room for mounting bolts and washers, yet these housings are more than 30% stronger than before while also reducing housing weight. The new housing downward destruction strength means that the inserts break before the housings.

6 Simple installation and handling

FYH Ball Bearing Units interchange with many different models and can be bolted to machinery without any modification. The exact amount of clearance is allowed between the bore and the shaft to allow a perfect fit. Therefore, FYH Ball Bearing Units do not require any additional lubrication or seal installation. As a result, handling and downtime can be drastically reduced. Four different locking mechanisms are available:

(1) Set Screw
(2) Eccentric Locking Collar
(3) Tapered Adapter
(4) Concentric Collar

Mounting the bearing to the shaft can be executed easily and securely by adopting any of these methods.

7 Series and models

FYH Ball Bearing Units are available in various series and models. Reliability of machinery or equipment, used together with these units, can be improved by selecting and using units optimal for the application and operating conditions.

- High / Low Temperature Series
- Corrosion Resistant Series
  - Stainless Units
  - Plastic Units
  - Nickel plated Units
- Air Handling Series
  - S3 & S5 Bearing Units
  - NU-LOC Units
- Dust Resistant Units
  - Triple lip seal inserts
  - Felt seal inserts
- Dirt Resistant Units
  - Tight Triple lip seal inserts
  - Units with Covers
- Tougher casting Series
  - Ductile iron housing
- Compact and lightweight Series
  - Small die cast Units
  - Lightweight casting Units
  - Stamped Units

Every effort has been taken to ensure that the data listed in this catalogue is correct.
Finer Power Transmissions P/L will not accept liability for any damage or loss caused as a result of the data in this catalogue.

FYH
Finer Power Transmissions P/L | www.finerpt.com

Bearing Inserts

UC200 Series

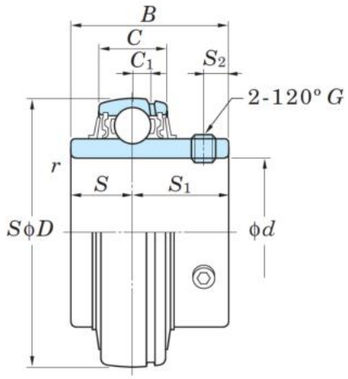

UC

UC200 Series

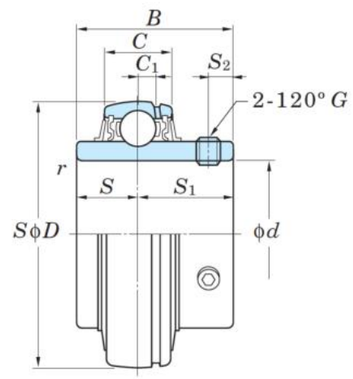

UC

Shaft Dia		Dimensions								Basic Load ratingskN		Factor	Bearing no.		Dimensions								Set Screw Brg. Bore		Mass kg
mm	inch	D		B		C		r (min.)							C1		S		S1		S2		G		
d		mm	inch	mm	inch	mm	inch	mm	inch	Cr	C0r	f 0	Standard		mm	inch	mm	inch	mm	inch	mm	inch	mm	inch	
	1/2	47	1.85	31	1.22	16	0.63	0.6	0.024	12.8	6.65	13.2	UC201-8		4	0.157	12.7	0.5	18.3	0.72	5	0.197	–	1/4-28UNF	0.21
12		47	1.85	31	1.22	16	0.63	0.6	0.024	12.8	6.65	13.2	UC201		4	0.157	12.7	0.5	18.3	0.72	5	0.197	M6×0.75	–	0.21
	5/8	47	1.85	31	1.22	16	0.63	0.6	0.024	12.8	6.65	13.2	UC202-10		4	0.157	12.7	0.5	18.3	0.72	5	0.197	–	1/4-28UNF	0.19
15		47	1.85	31	1.22	16	0.63	0.6	0.024	12.8	6.65	13.2	UC202		4	0.157	12.7	0.5	18.3	0.72	5	0.197	M6×0.75	–	0.19
17		47	1.85	31	1.22	16	0.63	0.6	0.024	12.8	6.65	13.2	UC203		4	0.157	12.7	0.5	18.3	0.72	5	0.197	M6×0.75	–	0.18
	3/4	47	1.85	31	1.22	16	0.63	1	0.039	12.8	6.65	13.2	UC204-12		4	0.157	12.7	0.5	18.3	0.72	5	0.197	–	1/4-28UNF	0.16
20		47	1.85	31	1.22	16	0.63	1	0.039	12.8	6.65	13.2	UC204		4	0.157	12.7	0.5	18.3	0.72	5	0.197	M6×0.75	–	0.16
	7/8	52	2.047	34.1	1.343	17	0.669	1	0.039	14	7.85	13.9	UC205-14		5	0.197	14.3	0.563	19.8	0.78	5.5	0.217	–	1/4-28UNF	0.23
	15/16	52	2.047	34.1	1.343	17	0.669	1	0.039	14	7.85	13.9	UC205-15		5	0.197	14.3	0.563	19.8	0.78	5.5	0.217	-	1/4-28UNF	0.21
	1	52	2.047	34.1	1.343	17	0.669	1	0.039	14	7.85	13.9	UC205-16		5	0.197	14.3	0.563	19.8	0.78	5.5	0.217	–	1/4-28UNF	0.2
25		52	2.047	34.1	1.343	17	0.669	1	0.039	14	7.85	13.9	UC205		5	0.197	14.3	0.563	19.8	0.78	5.5	0.217	M6×0.75	–	0.2
	1 1/8	62	2.441	38.1	1.5	19	0.748	1	0.039	19.5	11.3	13.9	UC206-18		5	0.197	15.9	0.626	22.2	0.874	6	0.236	–	1/4-28UNF	0.34
	1 3/16	62	2.441	38.1	1.5	19	0.748	1	0.039	19.5	11.3	13.9	UC206-19		5	0.197	15.9	0.626	22.2	0.874	6	0.236	–	1/4-28UNF	0.32
	1 1/4	62	2.441	38.1	1.5	19	0.748	1	0.039	19.5	11.3	13.9	UC206-20		5	0.197	15.9	0.626	22.2	0.874	6	0.236	–	1/4-28UNF	0.3
30		62	2.441	38.1	1.5	19	0.748	1	0.039	19.5	11.3	13.9	UC206		5	0.197	15.9	0.626	22.2	0.874	6	0.236	M6×0.75	–	0.32
	1 1/4	72	2.835	42.9	1.689	20	0.787	1.1	0.043	25.7	15.4	13.9	UC207-20		5.5	0.217	17.5	0.689	25.4	1	6.5	0.256	–	5/16-24UNF	0.54
	1 5/16	72	2.835	42.9	1.689	20	0.787	1.1	0.043	25.7	15.4	13.9	UC207-21		5.5	0.217	17.5	0.689	25.4	1	6.5	0.256	-	5/16-24UNF	0.51
	1 3/8	72	2.835	42.9	1.689	20	0.787	1.1	0.043	25.7	15.4	13.9	UC207-22		5.5	0.217	17.5	0.689	25.4	1	6.5	0.256	–	5/16-24UNF	0.48
	1 7/16	72	2.835	42.9	1.689	20	0.787	1.1	0.043	25.7	15.4	13.9	UC207-23		5.5	0.217	17.5	0.689	25.4	1	6.5	0.256	–	5/16-24UNF	0.45
35		72	2.835	42.9	1.689	20	0.787	1.1	0.043	25.7	15.4	13.9	UC207		5.5	0.217	17.5	0.689	25.4	1	6.5	0.256	M8×1	–	0.48
	1 1/2	80	3.15	49.2	1.937	21	0.827	1.1	0.043	29.1	17.8	14	UC208-24		6	0.236	19	0.748	30.2	1.189	8	0.315	–	5/16-24UNF	0.68
	1 9/16	80	3.15	49.2	1.937	21	0.827	1.1	0.043	29.1	17.8	14	UC208-25		6	0.236	19	0.748	30.2	1.189	8	0.315	–	5/16-24UNF	0.60
40		80	3.15	49.2	1.937	21	0.827	1.1	0.043	29.1	17.8	14	UC208		6	0.236	19	0.748	30.2	1.189	8	0.315	M8×1	–	0.64
	1 5/8	85	3.346	49.2	1.937	22	0.866	1.1	0.043	34.1	21.3	14	UC209-26		6	0.236	19	0.748	30.2	1.189	8	0.315	–	5/16-24UNF	0.78
	1 11/16	85	3.346	49.2	1.937	22	0.866	1.1	0.043	34.1	21.3	14	UC209-27		6	0.236	19	0.748	30.2	1.189	8	0.315	–	5/16-24UNF	0.74
	1 3/4	85	3.346	49.2	1.937	22	0.866	1.1	0.043	34.1	21.3	14	UC209-28		6	0.236	19	0.748	30.2	1.189	8	0.315	–	5/16-24UNF	0.7
45		85	3.346	49.2	1.937	22	0.866	1.1	0.043	34.1	21.3	14	UC209		6	0.236	19	0.748	30.2	1.189	8	0.315	M8×1	–	0.68
	1 7/8	90	3.543	51.6	2.031	24	0.945	1.1	0.043	35.1	23.3	14.4	UC210-30		6	0.236	19	0.748	32.6	1.283	9	0.354	–	3/8-24UNF	0.87
	1 15/16	90	3.543	51.6	2.031	24	0.945	1.1	0.043	35.1	23.3	14.4	UC210-31		6	0.236	19	0.748	32.6	1.283	9	0.354	–	3/8-24UNF	0.82
	2	90	3.543	51.6	2.031	24	0.945	1.1	0.043	35.1	23.3	14.4	UC210-32		6	0.236	19	0.748	32.6	1.283	9	0.354	–	3/8-24UNF	0.78
50		90	3.543	51.6	2.031	24	0.945	1.1	0.043	35.1	23.3	14.4	UC210		6	0.236	19	0.748	32.6	1.283	9	0.354	M10×1.25	–	0.8
	2	100	3.937	55.6	2.189	25	0.984	1.5	0.059	43.4	29.4	14.4	UC211-32		7	0.276	22.2	0.874	33.4	1.315	9	0.354	–	3/8-24UNF	1.26
	2 1/8	100	3.937	55.6	2.189	25	0.984	1.5	0.059	43.4	29.4	14.4	UC211-34		7	0.276	22.2	0.874	33.4	1.315	9	0.354	–	3/8-24UNF	1.15
	2 3/16	100	3.937	55.6	2.189	25	0.984	1.5	0.059	43.4	29.4	14.4	UC211-35		7	0.276	22.2	0.874	33.4	1.315	9	0.354	–	3/8-24UNF	1.09
55		100	3.937	55.6	2.189	25	0.984	1.5	0.059	43.4	29.4	14.4	UC211		7	0.276	22.2	0.874	33.4	1.315	9	0.354	M10×1.25	–	1.11
	2 1/4	110	4.331	65.1	2.563	27	1.063	1.5	0.059	52.4	36.2	14.4	UC212-36		7.5	0.295	25.4	1	39.7	1.563	10.5	0.413	–	3/8-24UNF	1.67
	2 3/8	110	4.331	65.1	2.563	27	1.063	1.5	0.059	52.4	36.2	14.4	UC212-38		7.5	0.295	25.4	1	39.7	1.563	10.5	0.413	–	3/8-24UNF	1.52
	2 7/16	110	4.331	65.1	2.563	27	1.063	1.5	0.059	52.4	36.2	14.4	UC212-39		7.5	0.295	25.4	1	39.7	1.563	10.5	0.413	–	3/8-24UNF	1.45
60		110	4.331	65.1	2.563	27	1.063	1.5	0.059	52.4	36.2	14.4	UC212		7.5	0.295	25.4	1	39.7	1.563	10.5	0.413	M10×1.25	–	1.54
	2 1/2	120	4.724	65.1	2.563	28	1.102	1.5	0.059	57.2	40.1	14.4	UC213-40		7.5	0.295	25.4	1	39.7	1.563	12	0.472	–	1/2-20UNF	1.94
65		120	4.724	65.1	2.563	28	1.102	1.5	0.059	57.2	40.1	14.4	UC213		7.5	0.295	25.4	1	39.7	1.563	12	0.472	M12×1.5	–	1.86
	2 11/16	125	4.921	74.6	2.937	30	1.1881	1.5	0.059	62.2	44.1	14.5	UC214-43		9	0.354	30.2	1.189	44.4	1.748	12	0.472	-	1/2-20	2.06

Every effort has been taken to ensure that the data listed in this catalogue is correct.
Finer Power Transmissions P/L will not accept liability for any damage or loss caused as a result of the data in this catalogue.

Every effort has been taken to ensure that the data listed in this catalogue is correct.
Finer Power Transmissions P/L will not accept liability for any damage or loss caused as a result of the data in this catalogue.

UC200 Series

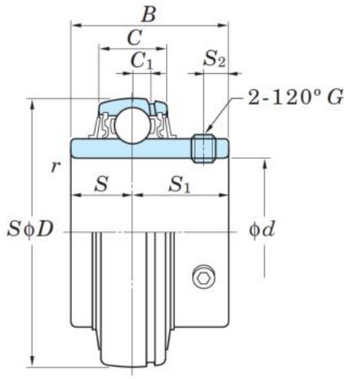

UC

Shaft Dia		Dimensions								Basic Load ratingskN		Factor	Bearing no.
mm	inch	D		B		C		r (min.)					
d		mm	inch	mm	inch	mm	inch	mm	inch	Cr	C0r	f 0	Standard
	2 3/4	125	4.921	74.6	2.937	30	1.181	1.5	0.059	62.2	44.1	14.5	UC214-44
70		125	4.921	74.6	2.937	30	1.181	1.5	0.059	62.2	44.1	14.5	UC214
	2 15/16	130	5.118	77.8	3.063	30	1.181	1.5	0.059	67.4	48.3	14.5	UC215-47
	3	130	5.118	77.8	3.063	32	1.26	1.5	0.059	67.4	48.3	14.5	UC215-48
75		130	5.118	77.8	3.063	32	1.26	1.5	0.059	67.4	48.3	14.5	UC215
	3 1/8	140	5.512	82.6	3.252	33	1.299	2	0.079	72.7	53	14.6	UC216-50
80		140	5.512	82.6	3.252	33	1.299	2	0.079	72.7	53	14.6	UC216
	3 1/4	150	5.906	85.7	3.374	35	1.378	2	0.079	84	61.9	14.5	UC217-52
85		150	5.906	85.7	3.374	35	1.378	2	0.079	84	61.9	14.5	UC217
	3 1/2	160	6.299	96	3.78	38	1.496	2	0.079	96.1	71.5	14.5	UC218-56
90		160	6.299	96	3.78	38	1.496	2	0.079	96.1	71.5	14.5	UC218

Every effort has been taken to ensure that the data listed in this catalogue is correct.
Finer Power Transmissions P/L will not accept liability for any damage or loss caused as a result of the data in this catalogue.

Bearing Inserts
FYH
Finer Power Transmissions P/L | www.finerpt.com

UC200 Series

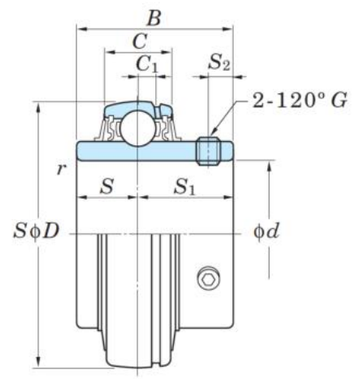

UC

Dimensions								Set Screw Brg. Bore		Mass kg
C1		S		S1		S2		G		
mm	inch	mm	inch	mm	inch	mm	inch	mm	inch	
9	0.354	30.2	1.189	44.4	1.748	12	0.472	–	1/2-20UNF	2.06
9	0.354	30.2	1.189	44.4	1.748	12	0.472	M12×1.5	–	2.05
9	0.354	33.3	1.311	44.5	1.752	12	0.472	-	1/2-20UNF	2.12
9	0.354	33.3	1.311	44.5	1.752	12	0.472	–	1/2-20UNF	2.12
9	0.354	33.3	1.311	44.5	1.752	12	0.472	M12×1.5	–	2.21
9	0.354	33.3	1.311	49.3	1.941	14	0.551	–	1/2-20UNF	2.84
9	0.354	33.3	1.311	49.3	1.941	14	0.551	M12×1.5	–	2.79
10	0.394	34.1	1.343	51.6	2.031	14	0.551	–	1/2-20UNF	3.66
10	0.394	34.1	1.343	51.6	2.031	14	0.551	M12×1.5	–	3.45
11	0.433	39.7	1.563	56.3	2.217	15	0.591	–	1/2-20UNF	4.46
11	0.433	39.7	1.563	56.3	2.217	15	0.591	M12×1.5	–	4.35

Every effort has been taken to ensure that the data listed in this catalogue is correct.
Finer Power Transmissions P/L will not accept liability for any damage or loss caused as a result of the data in this catalogue.

FYH
Finer Power Transmissions P/L | www.finerpt.com

Bearing Inserts

NA200 Series

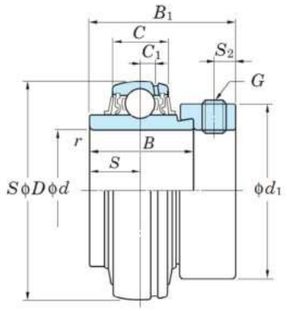

NA

NA200 Series

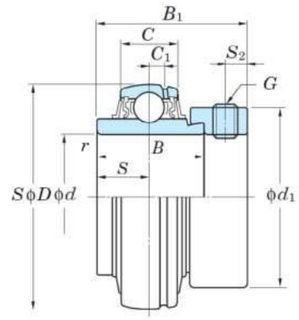

NA

Shaft Dia		Dimensions										Basic Load ratings kN		Factor	Bearing no.		Dimensions								Set Screw Brg. Bore		Mass kg
mm	inch	D		B		B1		C		r (min.)							C1		S		S2		d1		G		
d		mm	inch	mm	inch	mm	inch	mm	inch	mm	inch	Cr	C0r	f 0			mm	inch	mm	inch	mm	inch	mm	inch	mm	inch	
	3/4	47	1.85	34.2	1.346	43.7	1.72	16	0.63	1	0.039	12.8	6.65	13.2	NA204-12		4	0.157	17.1	0.673	4.8	0.189	33.3	1.311	–	1/4-28UNF	0.23
20		47	1.85	34.2	1.346	43.7	1.72	16	0.63	1	0.039	12.8	6.65	13.2	NA204		4	0.157	17.1	0.673	4.8	0.189	33.3	1.311	M6×0.75	–	0.22
-	7/8	52	2.047	34.9	1.374	44.4	1.748	17	0.669	1	0.039	14	7.85	13.9	NA205-14		5	0.197	17.5	0.689	4.8	0.189	38.1	1.5	-	1/4-28UNF	0.27
	15/16	52	2.047	34.9	1.374	44.4	1.748	17	0.669	1	0.039	14	7.85	13.9	NA205-15		5	0.197	17.5	0.689	4.8	0.189	38.1			1/4-28UNF	0.29
	1	52	2.047	34.9	1.374	44.4	1.748	17	0.669	1	0.039	14	7.85	13.9	NA205-16		5	0.197	17.5	0.689	4.8	0.189	38.1	1.5	–	1/4-28UNF	0.25
25		52	2.047	34.9	1.374	44.4	1.748	17	0.669	1	0.039	14	7.85	13.9	NA205		5	0.197	17.5	0.689	4.8	0.189	38.1	1.5	M6×0.75	–	0.25
	1 1/8	62	2.441	36.5	1.437	48.4	1.906	19	0.748	1	0.039	19.5	11.3	13.9	NA206-18		5	0.197	18.3	0.72	6	0.236	44.5	1.752	–	5/16-24UNF	0.43
	1 3/16	62	2.441	36.5	1.437	48.4	1.906	19	0.748	1	0.039	19.5	11.3	13.9	NA206-19		5	0.197	18.3	0.72	6	0.236	44.5	1.752	–	5/16-24UNF	0.41
	1 1/4	62	2.441	36.5	1.437	48.4	1.906	19	0.748	1	0.039	19.5	11.3	13.9	NA206-20		5	0.197	18.3	0.72	6	0.236	44.5	1.752	–	5/16-24UNF	0.38
30		62	2.441	36.5	1.437	48.4	1.906	19	0.748	1	0.039	19.5	11.3	13.9	NA206		5	0.197	18.3	0.72	6	0.236	44.5	1.752	M8×1	–	0.41
	1 1/4	72	2.835	37.6	1.48	51.1	2.012	20	0.787	1.1	0.043	25.7	15.4	13.9	NA207-20		5.5	0.217	18.8	0.74	6.8	0.268	55.6	2.189	–	5/16-24UNF	0.68
	1 5/16	72	2.835	37.6	1.48	51.1	2.012	20	0.787	1.1	0.043	25.7	15.4	13.9	NA207-21		5.5	0.217	18.8	0.74	6.8	0.268	55.6	2.189	-	5/16-24UNF	0.65
	1 3/8	72	2.835	37.6	1.48	51.1	2.012	20	0.787	1.1	0.043	25.7	15.4	13.9	NA207-22		5.5	0.217	18.8	0.74	6.8	0.268	55.6	2.189	–	5/16-24UNF	0.61
	1 7/16	72	2.835	37.6	1.48	51.1	2.012	20	0.787	1.1	0.043	25.7	15.4	13.9	NA207-23		5.5	0.217	18.8	0.74	6.8	0.268	55.6	2.189	–	5/16-24UNF	0.58
35		72	2.835	37.6	1.48	51.1	2.012	20	0.787	1.1	0.043	25.7	15.4	13.9	NA207		5.5	0.217	18.8	0.74	6.8	0.268	55.6	2.189	M8×1	–	0.61
	1 1/2	80	3.15	42.8	1.685	56.3	2.217	21	0.827	1.1	0.043	29.1	17.8	14	NA208-24		6	0.236	21.4	0.843	6.8	0.268	60.3	2.374	–	5/16-24UNF	0.83
	1 9/16	80	3.15	42.8	1.685	56.3	2.217	21	0.827	1.1	0.043	29.1	17.8	14	NA208-25		6	0.236	21.4	0.843	6.8	0.268	60.3	2.374	-	5/16-24UNF	0.79
40		80	3.15	42.8	1.685	56.3	2.217	21	0.827	1.1	0.043	29.1	17.8	14	NA208		6	0.236	21.4	0.843	6.8	0.268	60.3	2.374	M8×1	–	0.78
	1 5/8	85	3.346	42.8	1.685	56.3	2.217	22	0.866	1.1	0.043	34.1	21.3	14	NA209-26		6	0.236	21.4	0.843	6.8	0.268	63.5	2.5	–	5/16-24UNF	0.96
	1 11/16	85	3.346	42.8	1.685	56.3	2.217	22	0.866	1.1	0.043	34.1	21.3	14	NA209-27		6	0.236	21.4	0.843	6.8	0.268	63.5	2.5	–	5/16-24UNF	0.91
	1 3/4	85	3.346	42.8	1.685	56.3	2.217	22	0.866	1.1	0.043	34.1	21.3	14	NA209-28		6	0.236	21.4	0.843	6.8	0.268	63.5	2.5	–	5/16-24UNF	0.87
45		85	3.346	42.8	1.685	56.3	2.217	22	0.866	1.1	0.043	34.1	21.3	14	NA209		6	0.236	21.4	0.843	6.8	0.268	63.5	2.5	M8×1	–	0.85
	1 7/8	90	3.543	49.2	1.937	62.7	2.469	24	0.945	1.1	0.043	35.1	23.3	14.4	NA210-30		6	0.236	24.6	0.969	6.8	0.268	69.9	2.752	–	5/16-24UNF	1.08
	1 15/16	90	3.543	49.2	1.937	62.7	2.469	24	0.945	1.1	0.043	35.1	23.3	14.4	NA210-31		6	0.236	24.6	0.969	6.8	0.268	69.9	2.752	-	5/16-24UNF	1.04
	2	90	3.543	49.2	1.937	62.7	2.469	24	0.945	1.1	0.043	35.1	23.3	14.4	NA210-32		6	0.236	24.6	0.969	6.8	0.268	69.9	2.752	-	5/16-24UNF	0.99
50		90	3.543	49.2	1.937	62.7	2.469	24	0.945	1.1	0.043	35.1	23.3	14.4	NA210		6	0.236	24.6	0.969	6.8	0.268	69.9	2.752	M8×1	–	1.01
	2	100	3.937	55.5	2.185	71.4	2.811	25	0.984	1.5	0.059	43.4	29.4	14.4	NA211-32		7	0.276	27.8	1.094	8	0.315	76.2	3	–	3/8-24UNF	1.58
	2 3/16	100	3.937	55.5	2.185	71.4	2.811	25	0.984	1.5	0.059	43.4	29.4	14.4	NA211-35		7	0.276	27.8	1.094	8	0.315	76.2	3	-	3/8-24UNF	1.36
55		100	3.937	55.5	2.185	71.4	2.811	25	0.984	1.5	0.059	43.4	29.4	14.4	NA211		7	0.276	27.8	1.094	8	0.315	76.2	3	M10×1.25	–	1.39
	2 1/4	110	4.331	61.9	2.437	77.8	3.063	27	1.063	1.5	0.059	52.4	36.2	14.4	NA212-36		7.5	0.295	31	1.22	8	0.315	84.2	3.315	–	3/8-24UNF	2.03
60		110	4.331	61.9	2.437	77.8	3.063	27	1.063	1.5	0.059	52.4	36.2	14.4	NA212		7.5	0.295	31	1.22	8	0.315	84.2	3.315	M10×1.25	–	1.87
	2 1/2	120	4.724	68.2	2.685	85.7	3.374	28	1.102	1.5	0.059	57.2	40.1	14.4	NA213-40		7.5	0.295	34.1	1.343	8.5	0.335	92	3.622	–	3/8-24UNF	2.51
65		120	4.724	68.2	2.685	85.7	3.374	28	1.102	1.5	0.059	57.2	40.1	14.4	NA213		7.5	0.295	34.1	1.343	8.5	0.335	92	3.622	M10×1.25	–	2.45
-	2 3/4	125	4.921	68.2	2.685	85.7	3.374	28	1.102	1.5	0.059	62.2	44.1	14.5	NA214-44		9	0.345	34.1	1.343	8.5	0.335	97	3.819	-	3/8-24UNF	2.94
70	-	125	4.921	68.2	2.685	85.7	3.374	28	1.102	1.5	0.059	62.2	44.1	14.5	NA214		9	0.345	34.1	1.343	8.5	0.335	97	3.819	M10×1.25	-	2.92
	3	130	5.118	74.6	2.937	92.1	3.626	32	1.260	1.5	0.059	67.4	48.3	14.5	NA215-48		9	0.345	37.3	1.469	8.5	0.335	102	4.016	-	3/8-24UNF	2.72
75	3	130	5.118	74.6	2.937	92.1	3.626	32	1.260	1.5	0.059	67.4	48.3	14.5	NA215		9	0.345	37.3	1.469	8.5	0.335	102	4.016	M10×1.25	-	2.74

Every effort has been taken to ensure that the data listed in this catalogue is correct.
Finer Power Transmissions P/L will not accept liability for any damage or loss caused as a result of the data in this catalogue.

Every effort has been taken to ensure that the data listed in this catalogue is correct.
Finer Power Transmissions P/L will not accept liability for any damage or loss caused as a result of the data in this catalogue.

FYH
Finer Power Transmissions P/L | www.finerpt.com

Bearing Inserts

NA200 Triple Lip Series

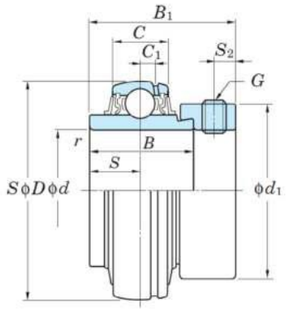

NA

NA200 Triple Lip Series

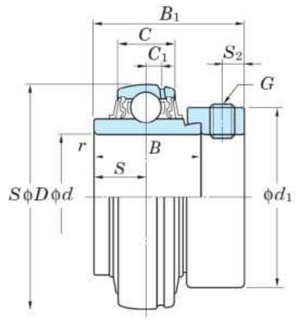

NA

Shaft Dia		Dimensions										Basic Load ratings kN		Factor	Bearing no.		Dimensions								Set Screw Brg. Bore		Mass kg
mm	inch	D		B		B1		C		r (min.)							C1		S		S2		d1		G		
d		mm	inch	mm	inch	mm	inch	mm	inch	mm	inch	Cr	C0r	f 0			mm	inch	mm	inch	mm	inch	mm	inch	mm	inch	
	3/4	47	1.85	34.2	1.346	43.7	1.72	16	0.63	1	0.039	12.8	6.65	13.2	NA204-12L2		4	0.157	17.1	0.673	4.8	0.189	33.3	1.311	–	1/4-28UNF	0.23
20		47	1.85	34.2	1.346	43.7	1.72	16	0.63	1	0.039	12.8	6.65	13.2	NA204L2		4	0.157	17.1	0.673	4.8	0.189	33.3	1.311	M6×0.75	–	0.22
-	7/8	52	2.047	34.9	1.374	44.4	1.748	17	0.669	1	0.039	14	7.85	13.9	NA205-14L2		5	0.197	17.5	0.689	4.8	0.189	38.1	1.5	-	1/4-28UNF	0.27
	15/16	52	2.047	34.9	1.374	44.4	1.748	17	0.669	1	0.039	14	7.85	13.9	NA205-15L2		5	0.197	17.5	0.689	4.8	0.189	38.1			1/4-28UNF	0.29
	1	52	2.047	34.9	1.374	44.4	1.748	17	0.669	1	0.039	14	7.85	13.9	NA205-16L2		5	0.197	17.5	0.689	4.8	0.189	38.1	1.5	–	1/4-28UNF	0.25
25		52	2.047	34.9	1.374	44.4	1.748	17	0.669	1	0.039	14	7.85	13.9	NA205L2		5	0.197	17.5	0.689	4.8	0.189	38.1	1.5	M6×0.75	–	0.25
	1 1/16	62	2.441	36.5	1.437	48.4	1.906	19	0.748	1	0.039	19.5	11.3	13.9	NA206-17L3		5	0.197	18.3	0.72	6	0.236	44.5	1.752	-	-	-
	1 1/8	62	2.441	36.5	1.437	48.4	1.906	19	0.748	1	0.039	19.5	11.3	13.9	NA206-18L3		5	0.197	18.3	0.72	6	0.236	44.5	1.752	–	5/16-24UNF	0.43
	1 3/16	62	2.441	36.5	1.437	48.4	1.906	19	0.748	1	0.039	19.5	11.3	13.9	NA206-19L3		5	0.197	18.3	0.72	6	0.236	44.5	1.752	–	5/16-24UNF	0.41
	1 1/4	62	2.441	36.5	1.437	48.4	1.906	19	0.748	1	0.039	19.5	11.3	13.9	NA206-20L3		5	0.197	18.3	0.72	6	0.236	44.5	1.752	–	5/16-24UNF	0.38
30		62	2.441	36.5	1.437	48.4	1.906	19	0.748	1	0.039	19.5	11.3	13.9	NA206L3		5	0.197	18.3	0.72	6	0.236	44.5	1.752	M8×1	–	0.41
	1 1/4	72	2.835	37.6	1.48	51.1	2.012	20	0.787	1.1	0.043	25.7	15.4	13.9	NA207-20L3		5.5	0.217	18.8	0.74	6.8	0.268	55.6	2.189	–	5/16-24UNF	0.68
	1 5/16	72	2.835	37.6	1.48	51.1	2.012	20	0.787	1.1	0.043	25.7	15.4	13.9	NA207-21L3		5.5	0.217	18.8	0.74	6.8	0.268	55.6	2.189	-	5/16-24UNF	0.65
	1 3/8	72	2.835	37.6	1.48	51.1	2.012	20	0.787	1.1	0.043	25.7	15.4	13.9	NA207-22L3		5.5	0.217	18.8	0.74	6.8	0.268	55.6	2.189	–	5/16-24UNF	0.61
	1 7/16	72	2.835	37.6	1.48	51.1	2.012	20	0.787	1.1	0.043	25.7	15.4	13.9	NA207-23L3		5.5	0.217	18.8	0.74	6.8	0.268	55.6	2.189	–	5/16-24UNF	0.58
35		72	2.835	37.6	1.48	51.1	2.012	20	0.787	1.1	0.043	25.7	15.4	13.9	NA207L3		5.5	0.217	18.8	0.74	6.8	0.268	55.6	2.189	M8×1	–	0.61
	1 1/2	80	3.15	42.8	1.685	56.3	2.217	21	0.827	1.1	0.043	29.1	17.8	14	NA208-24L3		6	0.236	21.4	0.843	6.8	0.268	60.3	2.374	–	5/16-24UNF	0.83
	1 9/16	80	3.15	42.8	1.685	56.3	2.217	21	0.827	1.1	0.043	29.1	17.8	14	NA208-25L3		6	0.236	21.4	0.843	6.8	0.268	60.3	2.374	-	5/16-24UNF	0.79
40		80	3.15	42.8	1.685	56.3	2.217	21	0.827	1.1	0.043	29.1	17.8	14	NA208L3		6	0.236	21.4	0.843	6.8	0.268	60.3	2.374	M8×1	–	0.78
	1 5/8	85	3.346	42.8	1.685	56.3	2.217	22	0.866	1.1	0.043	34.1	21.3	14	NA209-26L3		6	0.236	21.4	0.843	6.8	0.268	63.5	2.5	–	5/16-24UNF	0.96
	1 11/16	85	3.346	42.8	1.685	56.3	2.217	22	0.866	1.1	0.043	34.1	21.3	14	NA209-27L3		6	0.236	21.4	0.843	6.8	0.268	63.5	2.5	–	5/16-24UNF	0.91
	1 3/4	85	3.346	42.8	1.685	56.3	2.217	22	0.866	1.1	0.043	34.1	21.3	14	NA209-28L3		6	0.236	21.4	0.843	6.8	0.268	63.5	2.5	–	5/16-24UNF	0.87
45		85	3.346	42.8	1.685	56.3	2.217	22	0.866	1.1	0.043	34.1	21.3	14	NA209L3		6	0.236	21.4	0.843	6.8	0.268	63.5	2.5	M8×1	–	0.85
	1 7/8	90	3.543	49.2	1.937	62.7	2.469	24	0.945	1.1	0.043	35.1	23.3	14.4	NA210-30L3		6	0.236	24.6	0.969	6.8	0.268	69.9	2.752	–	5/16-24UNF	1.08
	1 15/16	90	3.543	49.2	1.937	62.7	2.469	24	0.945	1.1	0.043	35.1	23.3	14.4	NA210-31L3		6	0.236	24.6	0.969	6.8	0.268	69.9	2.752	-	5/16-24UNF	1.04
	2	90	3.543	49.2	1.937	62.7	2.469	24	0.945	1.1	0.043	35.1	23.3	14.4	NA210-32L3		6	0.236	24.6	0.969	6.8	0.268	69.9	2.752	-	5/16-24UNF	0.99
50		90	3.543	49.2	1.937	62.7	2.469	24	0.945	1.1	0.043	35.1	23.3	14.4	NA210L3		6	0.236	24.6	0.969	6.8	0.268	69.9	2.752	M8×1	–	1.01
	2	100	3.937	55.5	2.185	71.4	2.811	25	0.984	1.5	0.059	43.4	29.4	14.4	NA211-32L3		7	0.276	27.8	1.094	8	0.315	76.2	3	–	3/8-24UNF	1.58
	2 1/8	100	3.937	55.5	2.185	71.4	2.811	25	0.984	1.5	0.059	43.4	29.4	14.4	NA211-34L3		7	0.276	27.8	1.094	8	0.315	76.2	3	M10×1.25	-	1.39
	2 3/16	100	3.937	55.5	2.185	71.4	2.811	25	0.984	1.5	0.059	43.4	29.4	14.4	NA211-35L3		7	0.276	27.8	1.094	8	0.315	76.2	3	-	3/8-24UNF	1.36
55		100	3.937	55.5	2.185	71.4	2.811	25	0.984	1.5	0.059	43.4	29.4	14.4	NA211L3		7	0.276	27.8	1.094	8	0.315	76.2	3	M10×1.25	–	1.39
	2 1/4	110	4.331	61.9	2.437	77.8	3.063	27	1.063	1.5	0.059	52.4	36.2	14.4	NA212-36L3		7.5	0.295	31	1.22	8	0.315	84.2	3.315	–	3/8-24UNF	2.03
	2 3/8	110	4.331	61.9	2.437	77.8	3.063	27	1.063	1.5	0.059	52.4	36.2	14.4	NA212-38L3		7.5	0.295	31	1.22	8	0.315	84.2	3.315	-	-	-
	2 7/16	110	4.331	61.9	2.437	77.8	3.063	27	1.063	1.5	0.059	52.4	36.2	14.4	NA212-39L3		7.5	0.295	31	1.22	8	0.315	84.2	3.315	-	-	-
60		110	4.331	61.9	2.437	77.8	3.063	27	1.063	1.5	0.059	52.4	36.2	14.4	NA212L3		7.5	0.295	31	1.22	8	0.315	84.2	3.315	M10×1.25	–	1.87

Note: L2 = Double Lip, L3 = Triple Lip

Every effort has been taken to ensure that the data listed in this catalogue is correct.
Finer Power Transmissions P/L will not accept liability for any damage or loss caused as a result of the data in this catalogue.

Every effort has been taken to ensure that the data listed in this catalogue is correct.
Finer Power Transmissions P/L will not accept liability for any damage or loss caused as a result of the data in this catalogue.

NA300 Series

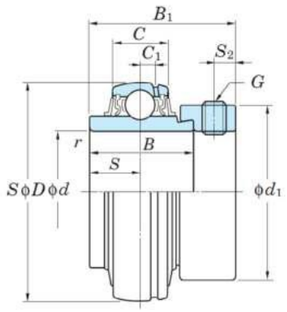

NA

Bearing Inserts

FYH
Finer Power Transmissions P/L | www.finerpt.com

NA300 Series

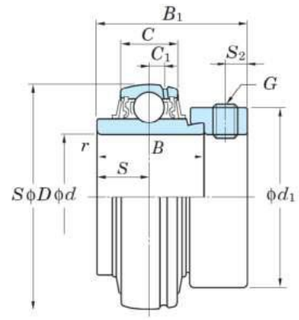

NA

Shaft Dia		Dimensions										Basic Load ratings kN		Factor	Bearing no.		Dimensions								Set Screw Brg. Bore		Mass kg
mm	inch	D		B		B1		C		r (min.)							C1		S		S2		d1		G		
d		mm	inch	mm	inch	mm	inch	mm	inch	mm	inch	Cr	C0r	f 0			mm	inch	mm	inch	mm	inch	mm	inch	mm	inch	
35		80	3.15	38.1	1.5	51.76	2.04	25	0.98	-	-	33.4	19.3	13.2	NA307		-	-	18.3	0.72	-	-	49	1.93	M14	1/2	-
40		90	3.54	41.3	1.62	57.1	2.25	28	1.10	-	-	40.7	24.0	13.2	NA308		-	-	19.8	0.78	-	-	56.5	2.22	M14	1/2	-
45		100	3.94	42.9	1.69	58.7	2.31	30	1.18	-	-	48.9	29.5	13.3	NA309		-	-	19.8	0.78	-	-	62	2.44	M16	5/8	-
50		110	4.33	49.2	1.94	66.6	2.62	32	1.26	-	-	62	38.3	13.2	NA310		-	-	24.6	0.96	-	-	69	2.71	M16	5/8	-
55		120	4.73	55.6	2.19	73	2.87	34	1.34	-	-	71.6	45	13.2	NA311		-	-	27.8	1.09	-	-	75	2.96	M16	5/8	-
60		130	5.12	59	2.32	76.5	3.01	36	1.42	-	-	81.9	52.2	13.2	NA312		-	-	29.5	1.16	-	-	81	3.19	M16	5/8	-
50.8	2	120	4.72	55.6	2.19	73	2.87	34	1.34	-	-	71.6	45	13.2	NA311-32		-	-	27.8	1.09	-	-	75	2.96	M20	3/4	-

Every effort has been taken to ensure that the data listed in this catalogue is correct.
Finer Power Transmissions P/L will not accept liability for any damage or loss caused as a result of the data in this catalogue.

Every effort has been taken to ensure that the data listed in this catalogue is correct.
Finer Power Transmissions P/L will not accept liability for any damage or loss caused as a result of the data in this catalogue.

FYH
Finer Power Transmissions P/L | www.finerpt.com

Bearing Inserts

SA200 Series

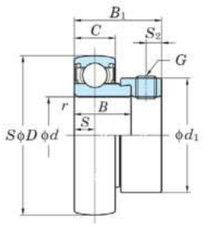

SA

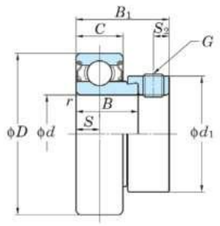

SAA-F

SA200 Series

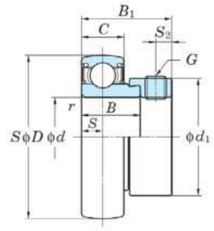

SA

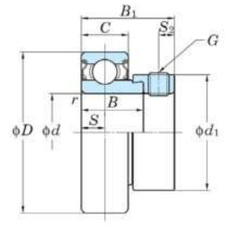

SAA-F

Shaft Dia		Dimensions										Basic Load ratings kN		Factor	Bearing no.								Set Screw Brg. Bore		Mass kg
mm	inch	D		B		B1		C		r (min.)							S		S2		d1		G		
d		mm	inch	mm	inch	mm	inch	mm	inch	mm	inch	Cr	C0r	f 0			mm	inch	mm	inch	mm	inch	mm	inch	
	1/2	40	1.575	19	0.784	28.5	1.122	12	0.472	0.6	0.024	9.55	4.8	13.2	SA201-8		6	0.236	4.8	0.189	28.6	1.126	–	1/4-28UNF	0.13
12		40	1.575	19	0.784	28.5	1.122	12	0.472	0.6	0.024	9.55	4.8	13.2	SA201		6	0.236	4.8	0.189	28.6	1.126	M6×0.75	–	0.13
	5/8	40	1.575	19	0.784	28.5	1.122	12	0.472	0.6	0.024	9.55	4.8	13.2	SA202-10		6	0.236	4.8	0.189	28.6	1.126	–	1/4-28UNF	0.13
15		40	1.575	19	0.784	28.5	1.122	12	0.472	0.6	0.024	9.55	4.8	13.2	SA202		6	0.236	4.8	0.189	28.6	1.126	M6×0.75	–	0.13
17		40	1.575	19	0.784	28.5	1.122	12	0.472	0.6	0.024	9.55	4.8	13.2	SA203		6	0.236	4.8	0.189	28.6	1.126	M6×0.75	–	0.13
	3/4	47	1.85	20	0.787	29.5	1.161	14	0.551	1	0.039	12.8	6.65	13.2	SA204-12		7	0.276	4.8	0.189	33.3	1.311	–	1/4-28UNF	0.15
20		47	1.85	20	0.787	29.5	1.161	14	0.551	1	0.039	12.8	6.65	13.2	SA204		7	0.276	4.8	0.189	33.3	1.311	M6×0.75	–	0.15
	7/8	52	2.047	21	0.827	30.5	1.201	15	0.591	1	0.039	14	7.85	13.9	SA205-14		7.5	0.295	4.8	0.189	38.1	1.5	–	1/4-28UNF	0.22
	15/16	52	2.047	21	0.827	30.5	1.201	15	0.591	1	0.039	14	7.85	13.9	SA205-15		7.5	0.295	4.8	0.189	38.1	1.5	–	1/4-28UNF	0.22
	1	52	2.047	21	0.827	30.5	1.201	15	0.591	1	0.039	14	7.85	13.9	SA205-16		7.5	0.295	4.8	0.189	38.1	1.5	–	1/4-28UNF	0.22
	1	52	2.047	21	0.827	31	1.22	15	0.591	1	0.039	14	7.85	13.9	SA205-16FP9		7.5	0.295	4.8	0.189	38.1	1.5	–	1/4-28UNF	0.22
25		52	2.047	21	0.827	30.5	1.201	15	0.591	1	0.039	14	7.85	13.9	SA205		7.5	0.295	4.8	0.189	38.1	1.5	M6×0.75	–	0.22
	1 1/8	62	2.441	22	0.866	33.9	1.335	16	0.63	1	0.039	19.5	11.3	13.9	SA206-18		8	0.315	6	0.236	44.5	1.752	–	5/16-24UNF	0.3
	1 1/8	62	2.441	22	0.866	35.7	1.406	18	0.709	1	0.039	19.5	11.3	13.9	SA206-18FP9		8	0.315	6	0.236	44.5	1.752	–	5/16-24UNF	0.3
	1 3/16	62	2.441	22	0.866	33.9	1.335	16	0.63	1	0.039	19.5	11.3	13.9	SA206-19		8	0.315	6	0.236	44.5	1.752	–	5/16-24UNF	0.3
	1 1/4	62	2.441	22	0.866	33.9	1.335	16	0.63	1	0.039	19.5	11.3	13.9	SA206-20		8	0.315	6	0.236	44.5	1.752	–	5/16-24UNF	0.3
	1 1/4	62	2.441	22	0.866	33.9	1.335	16	0.63	1	0.039	19.5	11.3	13.9	SA206-20FP9		8	0.315	6	0.236	44.5	1.752	–	5/16-24UNF	0.3
30		62	2.441	22	0.866	33.9	1.335	16	0.63	1	0.039	19.5	11.3	13.9	SA206		8	0.315	6	0.236	44.5	1.752	M8×1	–	0.3
	1 1/4	72	2.835	23	0.906	36.5	1.437	17	0.669	1.1	0.043	25.7	15.4	13.9	SA207-20		8.5	0.335	6.8	0.268	55.6	2.189	–	5/16-24UNF	0.5
	1 1/4	72	2.835	23	0.906	36.5	1.437	17	0.669	1.1	0.043	25.7	15.4	13.9	SA207-20FP9		8.5	0.335	6.8	0.268	55.6	2.189	–	5/16-24UNF	0.5
	1 3/8	72	2.835	23	0.906	36.5	1.437	17	0.669	1.1	0.043	25.7	15.4	13.9	SA207-22		8.5	0.335	6.8	0.268	55.6	2.189	–	5/16-24UNF	0.5
	1 7/16	72	2.835	23	0.906	36.5	1.437	17	0.669	1.1	0.043	25.7	15.4	13.9	SA207-23		8.5	0.335	6.8	0.268	55.6	2.189	–	5/16-24UNF	0.5
35		72	2.835	23	0.906	36.5	1.437	17	0.669	1.1	0.043	25.7	15.4	13.9	SA207		8.5	0.335	6.8	0.268	55.6	2.189	M8×1	–	0.5
	1 1/2	80	3.15	27	1.063	40.5	1.595	18	0.709	1.1	0.043	29.1	17.8	14	SA208-24		9	0.354	6.8	0.268	60.3	2.374	–	5/16-24UNF	0.67
	1 1/2	80	3.15	27	1.063	40.5	1.595	18	0.709	1.1	0.043	29.1	17.8	14	SA208-24FP9		9	0.354	6.8	0.268	60.3	2.374	–	5/16-24UNF	0.67
40		80	3.15	27	1.063	40.5	1.595	18	0.709	1.1	0.043	29.1	17.8	14	SA208		9	0.354	6.8	0.268	60.3	2.374	M8×1	–	0.67
	1 3/4	85	3.346	30.2	1.189	43.7	1.72	22	0.866	1.1	0.043	34.1	21.3	14	SA209-28		11	0.433	6.8	0.268	63.5	2.5	-	-	0.82
		85	3.346	30.2	1.189	43.7	1.72	22	0.866	1.1	0.043	34.1	21.3	14	SA209-26F		11	0.433	6.8	0.268	63.5	2.5	-	5/16-24UNF	0.82
	1 11/16	85	3.346	30.2	1.189	43.7	1.72	22	0.866	1.1	0.043	34.1	21.3	14	SA209-27F		11	0.433	6.8	0.268	63.5	2.5	-	5/16-24UNF	0.82
45	-	85	3.346	30.2	1.189	43.7	1.72	22	0.866	1.1	0.043	32.7	20.4	-	SA209FP9		11	0.433	6.8	0.268	63.5	2.5	M8×1	-	0.82
50	-	90	3.5433	30.2	1.189	43.7	1.72	22	0.866	1.1	0.043	35	23.1	-	SA210FP9		11	0.433	6.8	0.268	69.6	2.75	M8×1	-	0.85
	1 7/8	90	3.5433	30.2	1.189	43.7	1.72	22	0.866	1.1	0.043	35.1	23.3	14.4	SA210-30F		11	0.433	6.8	0.268	69.6	2.75	M8×1	-	0.85
	1 15/16	90	3.5433	30.2	1.189	43.7	1.72	22	0.866	1.1	0.043	35.1	23.3	14.4	SA210-31F		11	0.433	6.8	0.268	69.6	2.75	-	5/16-24UNF	0.85
	2	100	3.937	32.4	1.276	48.4	1.906	24	0.945	1.5	0.059	43.4	29.4	14.4	SA211-32F		12	0.472	8	0.315	76.2	3	-	3/8-24UNF	1.2
	2 3/16	100	3.937	32.4	1.276	48.4	1.906	24	0.945	1.5	0.059	43.4	29.4	14.4	SA211-35F		12	0.472	8	0.315	76.2	3	-	3/8-24UNF	1.2
55		100	3.937	32.4	1.276	48.4	1.906	24	0.945	1.5	0.059	43.4	29.4	-	SA211F		12	0.472	8	0.315	76.2	3	M10×1.25	-	1.2

Every effort has been taken to ensure that the data listed in this catalogue is correct.
Finer Power Transmissions P/L will not accept liability for any damage or loss caused as a result of the data in this catalogue.

Every effort has been taken to ensure that the data listed in this catalogue is correct.
Finer Power Transmissions P/L will not accept liability for any damage or loss caused as a result of the data in this catalogue.

FYH
Finer Power Transmissions P/L | www.finerpt.com

Bearing Inserts

SAA200 Series

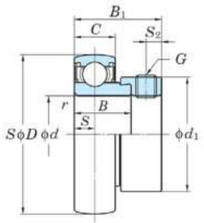

SA

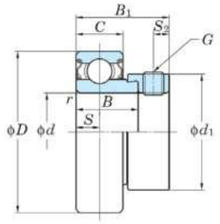

SAA-F

SAA200 Series

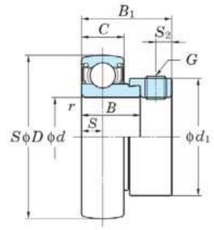

SA

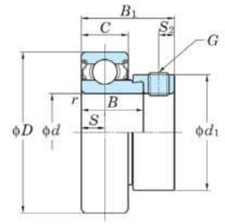

SAA-F

Shaft Dia		Dimensions										Basic Load rat-ingskN		Factor	Bearing no.		Dimensions								Set Screw Brg. Bore		Mass kg
mm	inch	D		B		B1		C		r (min.)							C1		S		S2		d1		G		
d		mm	inch	mm	inch	mm	inch	mm	inch	mm	inch	Cr	C0r	f 0			mm	inch	mm	inch	mm	inch	mm	inch	mm	inch	
	1/2	40	1.575	19.1	0.752	28.6	1.126	13	0.512	0.6	0.024	9.55	4.8	13.2	SAA201-8FP7		6.5	0.256	16	0.63	4.8	0.189	28.6	1.126	–	1/4-28UNF	0.13
	5/8	40	1.575	19.1	0.752	28.6	1.126	13	0.512	0.6	0.024	9.55	4.8	13.2	SAA202FP7		6.5	0.256	16	0.63	4.8	0.189	28.6	1.126	M6×0.75	–	0.13
17		40	1.575	17	0.669	28.6	1.126	13	0.512	0.6	0.024	9.55	4.8	13.2	SAA203		6.5	0.256	16	0.63	4.8	0.189	28.6	1.126	M6×0.75	-	0.13
17		40	1.575	19.1	0.752	28.6	1.126	13	0.512	0.6	0.024	9.55	4.8	13.2	SAA203FP7		6.5	0.256	16	0.63	4.8	0.189	28.6	1.126	M6×0.75	–	0.13
	3/4	47	1.85	21.5	0.846	31	1.22	15	0.591	1	0.039	12.8	6.65	13.2	SAA204-12FP7		7.5	0.295	18	0.709	4.8	0.189	33.3	1.311	–	1/4-28UNF	0.19
20		47	1.85	21.5	0.846	31	1.22	15	0.591	1	0.039	12.8	6.65	13.2	SAA204FP7		7.5	0.295	18	0.709	4.8	0.189	33.3	1.311	M6×0.75	–	1.19
	7/8	52	2.047	21.5	0.846	31	1.22	15	0.591	1	0.039	14	7.85	13.9	SAA205-14FP7		7.5	0.295	19.5	0.768	4.8	0.189	38.1	1.5	–	1/4-28UNF	0.23
	1	52	2.047	21.5	0.846	31	1.22	15	0.591	1	0.039	14	7.85	13.9	SAA205-16FP7		7.5	0.295	19.5	0.768	4.8	0.189	38.1	1.5	–	1/4-28UNF	0.23
25		52	2.047	21.5	0.846	31	1.22	15	0.591	1	0.039	14	7.85	13.9	SAA205FP7		7.5	0.295	19.5	0.768	4.8	0.189	38.1	1.5	M6×0.75	–	0.23
25		52	2.047	25	0.984	31	1.22	15	0.591	1	0.039	14	7.85	13.9	SAA205		7.5	0.295	19.5	0.768	4.8	0.189	38.1	1.5	M6×0.75	–	0.23
	1 1/8	62	2.441	23.8	0.937	35.7	1.406	18	0.709	1	0.039	19.5	11.3	13.9	SAA206-18FP7		9	0.35	22	0.866	6	0.236	44.5	1.752	–	5/16-24UNF	0.34
	1 1/4	62	2.441	23.8	0.937	35.7	1.406	18	0.709	1	0.039	19.5	11.3	13.9	SAA206-20FP7		9	0.35	22	0.866	6	0.236	44.5	1.752	–	5/16-24UNF	0.34
30		62	2.441	23.8	0.937	35.7	1.406	18	0.709	1	0.039	19.5	11.3	13.9	SAA206FP7		9	0.35	22	0.866	6	0.236	44.5	1.752	M8×1	–	0.34
30		62	2.441	30	1.181	35.7	1.406	18	0.709	1	0.039	19.5	11.3	13.9	SAA206		9	0.35	22	0.866	6	0.236	44.5	1.752	M8×1	-	0.34
	1 1/4	72	2.835	25.4	1	38.9	1.531	19	0.748	1.1	0.043	25.7	15.4	13.9	SAA207-20FP7		9.5	0.374	23.5	0.925	6.8	0.268	55.6	2.189	–	5/16-24UNF	0.57
	1 3/4	72	2.835	25.4	1	38.9	1.531	19	0.748	1.1	0.043	25.7	15.4	13.9	SAA207-22FP7		9.5	0.374	23.5	0.925	6.8	0.268	55.6	2.189	–	5/16-24UNF	0.57
35		72	2.835	25.4	1	38.9	1.531	19	0.748	1.1	0.043	25.7	15.4	13.9	SAA207FP7		9.5	0.374	23.5	0.925	6.8	0.268	55.6	2.189	M8×1	–	0.57
35		72	2.835	35	1.378	38.9	1.531	19	0.748	1.1	0.043	25.7	15.4	13.9	SAA207		9.5	0.374	23.5	0.925	6.8	0.268	55.6	2.189	M8×1	-	-
	1 1/2	80	3.15	30.2	1.189	43.7	1.72	22	0.866	1.1	0.043	29.1	17.8	14	SAA208-24FP7		11	0.433	25	0.984	6.8	0.268	60.3	2.374	–	5/16-24UNF	0.75
40		80	3.15	30.2	1.189	43.7	1.72	22	0.866	1.1	0.043	29.1	17.8	14	SAA208FP7		11	0.433	25	0.984	6.8	0.268	60.3	2.374	M8×1	–	0.75
40		80	3.15	40	1.575	43.7	1.72	22	0.866	1.1	0.043	29.1	17.8	14	SAA208		11	0.433	25	0.984	6.8	0.268	60.3	2.374	M8×1	–	0.75

FP7 = Regreasable
No FP7 = Greased for life of bearing

BOOK 7: BEARINGS – KOYO

7.2 PREMIUM FYH BEARINGS

Every effort has been taken to ensure that the data listed in this catalogue is correct.
Finer Power Transmissions P/L will not accept liability for any damage or loss caused as a result of the data in this catalogue.

Every effort has been taken to ensure that the data listed in this catalogue is correct.
Finer Power Transmissions P/L will not accept liability for any damage or loss caused as a result of the data in this catalogue.

FYH
Finer Power Transmissions P/L | www.finerpt.com

Bearing Inserts

SB200 Series

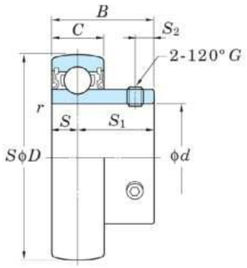

SB

SB200 Series

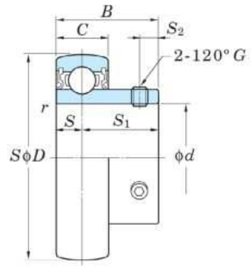

SB

Shaft Dia		Dimensions								Basic Load ratingskN		Factor	Bearing no.		Dimensions						Set Screw Brg. Bore		Mass kg
mm	inch	D		B		C		r (min.)							S		S1		S2		G		
d		mm	inch	mm	inch	mm	inch	mm	inch	Cr	C0r	f 0	Standard		mm	inch	mm	inch	mm	inch	mm	inch	
-	1/2	40	1.575	22	0.866	12	0.472	0.6	0.024	9.55	4.8	13.2	SB201-8		6	0.236	16	0.63	4	0.157	–	No.10-32UNF	0.1
12	-	40	1.575	22	0.866	12	0.472	0.6	0.024	9.55	4.8	13.2	SB201		6	0.236	16	0.63	4	0.157	M5×0.5	–	0.1
-	5/8	40	1.575	22	0.866	12	0.472	0.6	0.024	9.55	4.8	13.2	SB202-10		6	0.236	16	0.63	4	0.157	–	No.10-32UNF	0.1
15	-	40	1.575	22	0.866	12	0.472	0.6	0.024	9.55	4.8	13.2	SB202		6	0.236	16	0.63	4	0.157	M5×0.5	–	0.1
17	-	40	1.575	22	0.866	12	0.472	0.6	0.024	9.55	4.8	13.2	SB203		6	0.236	16	0.63	4	0.157	M5×0.5	–	0.1
-	3/4	47	1.85	25	0.984	14	0.551	1	0.039	12.8	6.65	13.2	SB204-12		7	0.276	18	0.709	5	0.197	–	1/4-28UNF	0.15
20	-	47	1.85	25	0.984	14	0.551	1	0.039	12.8	6.65	13.2	SB204		7	0.276	18	0.709	5	0.197	M6×0.75	–	0.15
-	7/8	52	2	27	1.063	15	0.591	1	0.039	14	7.85	13.9	SB205-14		7.5	0.295	19.5	0.768	5.5	0.217	-	1/4-28UNF	0.18
-	15/16	52	2	27	1.063	15	0.591	1	0.039	14	7.85	13.9	SB205-15		7.5	0.295	19.5	0.768	5.5	0.217	-	1/4-28UNF	0.18
-	1	52	2	27	1.063	15	0.591	1	0.039	14	7.85	13.9	SB205-16		7.5	0.295	19.5	0.768	5.5	0.217	–	1/4-28UNF	0.18
25	-	52	2	27	1.063	15	0.591	1	0.039	14	7.85	13.9	SB205		7.5	0.295	19.5	0.768	5.5	0.217	M6×0.75	–	0.18
-	1 1/4	62	2.441	30	1.181	16	0.63	1	0.039	19.5	11.3	13.9	SB206-20		8	0.315	22	0.866	6	0.236	–	1/4-28UNF	0.27
30	-	62	2.441	30	1.181	16	0.63	1	0.039	19.5	11.3	13.9	SB206		8	0.315	22	0.866	6	0.236	M6×0.75	–	0.27
-	1 7/16	72	2.835	32	1.26	17	0.669	1.1	0.043	25.7	15.4	13.9	SB207-23		8.5	0.335	23.5	0.925	6	0.236	–	1/4-28UNF	0.42
-	1 1/4	72	2.835	32	1.26	17	0.669	1.1	0.043	25.7	15.4	13.9	SB207-20		8.5	0.335	23.5	0.925	6	0.236	–	1/4-28UNF	0.42
35	-	72	2.835	32	1.26	17	0.669	1.1	0.043	25.7	15.4	13.9	SB207		8.5	0.335	23.5	0.925	6	0.236	M6×0.75	–	0.42
-	1 1/2	80	3.15	34	1.339	18	0.709	1.1	0.043	29.1	17.8	14	SB208-24		9	0.354	25	0.984	8	0.315	–	5/16-24UNF	0.6
40	-	80	3.15	34	1.339	18	0.709	1.1	0.043	29.1	17.8	14	SB208		9	0.354	25	0.984	8	0.315	M8×1	–	0.6

SBB200 Series

SBB200 Series

Shaft Dia		Dimensions								Basic Load ratingskN		Factor	Bearing no.		Dimensions						Set Screw Brg. Bore		Mass kg
mm	inch	D		B		C		r (min.)							S		S1		S2		G		
d		mm	inch	mm	inch	mm	inch	mm	inch	Cr	C0r	f 0	Standard		mm	inch	mm	inch	mm	inch	mm	inch	
-	1/2	40	1.575	22	0.866	12	0.472	0.6	0.024	9.55	4.8	13.2	SBB201-8RK		6	0.236	16	0.630	4	0.147	-	No. 10-32UNF	0.1
-	5/8	40	1.575	22	0.866	12	0.472	0.6	0.024	9.55	4.8	13.2	SBB202-10RK		6	0.236	16	0.630	4	0.147	-	No. 10-32UNF	0.1
17	-	40	1.575	22	0.866	12	0.472	0.6	0.024	9.55	4.8	13.2	SBB203RK		6	0.236	16	0.630	4	0.157	M5X0.5	-	0.1
-	3/4	47	1.850	25	0.984	14	0.511	1	0.039	12.8	6.65	13.2	SBB204-12RK		7	0.276	18	0.079	5	0.197	-	1/4 28UNF	0.15
20	-	47	1.850	25	0.984	14	0.511	1	0.039	12.8	6.65	13.2	SBB204RK		7	0.276	18	0.079	5	0.197	M6X0.75	-	0.15
-	7/8	52	2.047	27	1.063	15	0.591	1	0.039	14.0	7.85	13.9	SBB205-14RK		7.5	0.295	19.5	0.678	5.5	0.217	-	1/4 28UNF	0.18
-	1	52	2.047	27	1.063	15	0.591	1	0.039	14.0	7.85	13.9	SBB205-16RK		7.5	0.295	19.5	0.678	5.5	0.217	-	1/4 28UNF	0.18
25	-	52	2.047	27	1.063	15	0.591	1	0.039	14.0	7.85	13.9	SBB205RK		7.5	0.295	19.5	0.678	5.5	0.217	M6X0.75	-	0.18
-	1 1/8	62	2.441	27	1.063	15	0.591	1	0.039	19.5	11.3	13.9	SBB206-18RK		8	0.315	22	0.866	6	0.236	-	1/4 28UNF	0.27
-	1 1/4	62	2.441	30	1.181	16	0.630	1	0.039	19.5	11.3	13.9	SBB206-20RK		8	0.315	22	0.866	6	0.236	-	1/4 28UNF	0.42
30	-	62	2.441	30	1.181	16	0.630	1	0.039	19.5	11.3	13.9	SBB206RK		8	0.315	22	0.866	6	0.236	M6X0.75	-	0.27
-	1 1/4	72	2.835	32	1.260	17	0.669	1.1	0.043	25.7	15.4	13.9	SBB207-20RK		8.5	0.335	23.5	0.925	6	0.236	-	1/4 28UNF	0.42
-	1 3/8	72	2.835	32	1.260	17	0.669	1.1	0.043	25.7	15.4	13.9	SBB207-22RK		8.5	0.335	23.5	0.925	6	0.236	-	1/4 28UNF	0.42
35	-	72	2.835	32	1.260	17	0.669	1.1	0.043	25.7	15.4	13.9	SBB207RK		8.5	0.335	23.5	0.925	6	0.236	M6X0.75	-	0.42
-	1 1/2	80	3.150	34	1.339	18	0.709	1.1	0.043	29.1	17.8	14	SBB208-24RK		9	0.354	25	0.984	8	0.315	-	5/16 24UNF	0.6
40	-	80	3.150	34	1.339	18	0.709	1.1	0.043	29.1	17.8	14	SBB208RK		9	0.354	25	0.984	8	0.315	M8X1	-	0.6

Every effort has been taken to ensure that the data listed in this catalogue is correct.
Finer Power Transmissions P/L will not accept liability for any damage or loss caused as a result of the data in this catalogue.

Every effort has been taken to ensure that the data listed in this catalogue is correct.
Finer Power Transmissions P/L will not accept liability for any damage or loss caused as a result of the data in this catalogue.

FYH
Finer Power Transmissions P/L | www.finerpt.com
Bearing Inserts

SU000 Silver Series

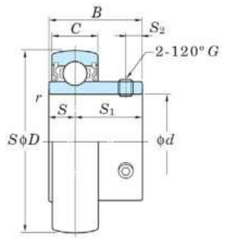

SU

SU000 Silver Series

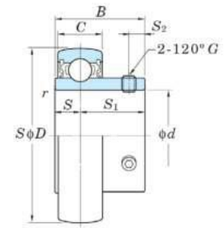

SU

Shaft Dia		Dimensions								Basic Load ratingskN		Factor	Bearing no.		Dimensions						Set Screw Brg. Bore		Mass kg
mm	inch	D		B		C		r (min.)							S		S1		S2		G		
d		mm	inch	mm	inch	mm	inch	mm	inch	Cr	C0r	f 0	Standard		mm	inch	mm	inch	mm	inch	mm	inch	
10	–	26	1.024	15	0.591	8	0.315	0.3	0.012	4.55	1.95	12.3	SU000		5	0.197	10	0.394	3	0.118	M3×0.35	–	0.024
12	–	28	1.102	15	0.591	8	0.315	0.3	0.012	5.1	2.4	13.2	SU001		5	0.197	10	0.394	3	0.118	M3×0.36	–	0.026
15	–	32	1.26	16.5	0.65	9	0.354	0.3	0.012	5.6	2.85	13.9	SU002		5.5	0.217	11	0.433	3.3	0.13	M4×0.5	–	0.038
17	–	35	1.378	17.5	0.689	10	0.394	0.3	0.012	6	3.25	14.4	SU003		6	0.236	11.5	0.453	3.3	0.13	M4×0.5	–	0.05
20	–	42	1.654	21	0.827	12	0.472	0.6	0.024	9.4	5.05	13.9	SU004		7	0.276	14	0.551	4	0.157	M5×0.5	–	0.08
25	–	47	1.85	22	0.866	12	0.472	0.6	0.024	10.1	5.85	14.5	SU005		7	0.276	15	0.591	4.5	0.177	M5×0.5	–	0.1
30	–	55	2.165	24.5	0.965	13	0.512	1	0.039	13.2	8.25	14.7	SU006		7.5	0.295	17	0.669	5.5	0.217	M5×0.5	–	0.15

SC200 Series

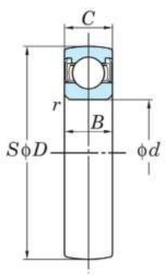

Shaft Dia.	Dimensions								Basic Load Ratings kN		Factor	Bearing No.	Mass Kg
mm	D		B		C		r (min)				f 0		
d	mm	inch	mm	inch	mm	inch	mm	inch	Cr	C0r			
17	40	1.575	12	0.472	12	0.472	0.6	0.024	9.55	4.8	13.2	SC203	0.1
20	47	1.85	14	0.551	14	0.551	1	0.039	12.8	6.65	13.2	SC204	0.15
25	52	2.047	15	0.591	15	0.591	1	0.039	14	7.85	13.9	SC205	0.18
30	62	2.441	16	0.63	16	0.63	1	0.039	19.5	11.3	13.9	SC206	0.27
35	72	2.835	17	0.669	17	0.669	1.1	0.043	25.7	15.4	13.9	SC207	0.42
40	80	3.15	18	0.709	18	0.709	1.1	0.043	29.1	17.8	14	SC208	0.6

BOOK 7. BEARINGS – KOYO
7.2 PREMIUM FYH BEARINGS

Every effort has been taken to ensure that the data listed in this catalogue is correct.
Finer Power Transmissions P/L will not accept liability for any damage or loss caused as a result of the data in this catalogue.
Every effort has been taken to ensure that the data listed in this catalogue is correct.
Finer Power Transmissions P/L will not accept liability for any damage or loss caused as a result of the data in this catalogue.

FYH
Finer Power Transmissions P/L | www.finerpt.com

Bearing Inserts

UC200 Triple Lip Series

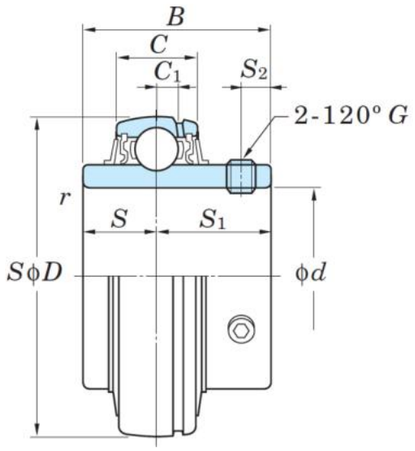

UC

UC200 Triple Lip Series

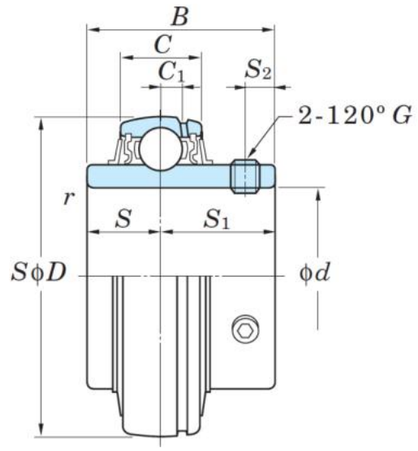

UC

Shaft Dia		Dimensions								Basic Load ratingskN		Factor	Bearing No.		Dimensions								Set Screw Brg. Bore		Mass kg
mm	inch	D		B		C		r (min.)							C1		S		S1		S2		G		
d		mm	inch	mm	inch	mm	inch	mm	inch	Cr	C0r	f 0	L2 & L3 Type		mm	inch	mm	inch	mm	inch	mm	inch	mm	inch	
	3/4	47	1.85	31	1.22	16	0.63	1	0.039	12.8	6.65	13.2	UC204-12L2		4	0.157	12.7	0.5	18.3	0.72	5	0.197	–	1/4-28UNF	0.16
20		47	1.85	31	1.22	16	0.63	1	0.039	12.8	6.65	13.2	UC204L2		4	0.157	12.7	0.5	18.3	0.72	5	0.197	M6×0.75	–	0.16
	1	52	2.047	34.1	1.343	17	0.669	1	0.039	14	7.85	13.9	UC205-16L2		5	0.197	14.3	0.563	19.8	0.78	5.5	0.217	–	1/4-28UNF	0.2
25		52	2.047	34.1	1.343	17	0.669	1	0.039	14	7.85	13.9	UC205L2		5	0.197	14.3	0.563	19.8	0.78	5.5	0.217	M6×0.75	–	0.2
	1 1/4	62	2.441	38.1	1.5	19	0.748	1	0.039	19.5	11.3	13.9	UC206-20L3		5	0.197	15.9	0.626	22.2	0.874	6	0.236	–	1/4-28UNF	0.3
30		62	2.441	38.1	1.5	19	0.748	1	0.039	19.5	11.3	13.9	UC206L3		5	0.197	15.9	0.626	22.2	0.874	6	0.236	M6×0.75	–	0.32
	1 1/4	72	2.835	42.9	1.689	20	0.787	1.1	0.043	25.7	15.4	13.9	UC207-20L3		5.5	0.217	17.5	0.689	25.4	1	6.5	0.256	–	5/16-24UNF	0.54
	1 3/8	72	2.835	42.9	1.689	20	0.787	1.1	0.043	25.7	15.4	13.9	UC207-22L3		2.5	0.217	17.5	0.689	25.4	1	6.5	0.256	-	5/16-24UNF	0.50
	1 7/16	72	2.835	42.9	1.689	20	0.787	1.1	0.043	25.7	15.4	13.9	UC207-23L3		5.5	0.217	17.5	0.689	25.4	1	6.5	0.256	–	5/16-24UNF	0.45
35		72	2.835	42.9	1.689	20	0.787	1.1	0.043	25.7	15.4	13.9	UC207L3		5.5	0.217	17.5	0.689	25.4	1	6.5	0.256	M8×1	–	0.48
	1 1/2	80	3.15	49.2	1.937	21	0.827	1.1	0.043	29.1	17.8	14	UC208-24L3		6	0.236	19	0.748	30.2	1.189	8	0.315	–	5/16-24UNF	0.68
40		80	3.15	49.2	1.937	21	0.827	1.1	0.043	29.1	17.8	14	UC208L3		6	0.236	19	0.748	30.2	1.189	8	0.315	M8×1	–	0.64
	1 3/4	85	3.346	49.2	1.937	22	0.866	1.1	0.043	34.1	21.3	14	UC209-28L3		6	0.236	19	0.748	30.2	1.189	8	0.315	–	5/16-24UNF	0.7
45		85	3.346	49.2	1.937	22	0.866	1.1	0.043	34.1	21.3	14	UC209L3		6	0.236	19	0.748	30.2	1.189	8	0.315	M8×1	–	0.68
	1 7/8	90	3.543	51.6	2.031	24	0.945	1.1	0.043	35.1	23.3	14.4	UC210-30L3		6	0.236	19	0.748	32.6	1.283	9	0.354	–	3/8-24UNF	0.87
50		90	3.543	51.6	2.031	24	0.945	1.1	0.043	35.1	23.3	14.4	UC210L3		6	0.236	19	0.748	32.6	1.283	9	0.354	M10×1.25	–	0.8
	2	100	3.937	55.6	2.189	25	0.984	1.5	0.059	43.4	29.4	14.4	UC211-32L3		7	0.276	22.2	0.874	33.4	1.315	9	0.354	–	3/8-24UNF	1.26
55		100	3.937	55.6	2.189	25	0.984	1.5	0.059	43.4	29.4	14.4	UC211L3		7	0.276	22.2	0.874	33.4	1.315	9	0.354	M10×1.25	–	1.11
-	2 1/2	120	4.724	65.1	2.563	28	1.102	1.5	0.059	57.2	40.1	14.4	UC213-40L3		7.5	0.295	25.4	1.000	39.7	1.563	12	0.472	-	1/2-20UNF	1.94
65	-	120	4.724	65.1	2.563	28	1.102	1.5	0.059	57.2	40.1	14.4	UC213L3		7.5	0.295	25.4	1.000	29.7	1.563	12	0.472	M12x1.5	-	1.86
-	2 3/4	125	4.921	74.6	2.937	30	1.181	1.5	0.059	62.2	44.1	14.5	UC214-44L3		9	0.354	30.2	1.189	44.4	1.748	12	0.472	-	1/2-20UNF	2.06
70	-	125	4.921	74.6	2.937	30	1.181	1.5	0.059	62.2	44.1	14.5	UC214L3		9	0.35	30.2	1.189	44.4	1.748	12	0.472	M12x1.5	-	2.05
-	2 15/16	130	5.118	77.8	3.063	32	1.260	1.5	0.059	67.4	48.3	14.5	UC215-47L3		9	0.354	33.3	1.311	44.5	1.752	12	0.472	-	1/2-20UNF	2.23
-	3	130	5.118	77.8	3.063	32	1.260	1.5	0.059	67.4	48.3	14.5	UC215-48L3		9	0.354	33.3	1.311	44.5	1.752	12	0.472	-	1/2-20UNF	2.12

Note: L2 = Double Lip, L3 = Triple Lip

Every effort has been taken to ensure that the data listed in this catalogue is correct.
Finer Power Transmissions P/L will not accept liability for any damage or loss caused as a result of the data in this catalogue.

Every effort has been taken to ensure that the data listed in this catalogue is correct.
Finer Power Transmissions P/L will not accept liability for any damage or loss caused as a result of the data in this catalogue.

UC200 Triple Lip Series

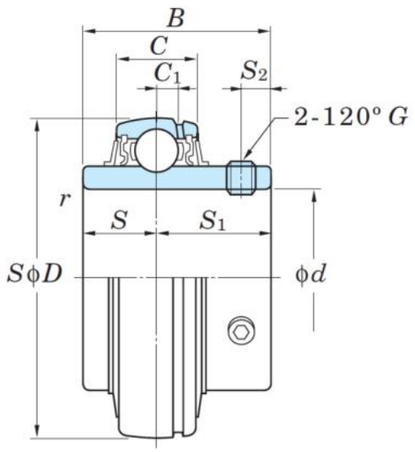

UC

FYH
Finer Power Transmissions P/L | www.finerpt.com

Bearing Inserts

UC200 Triple Lip Series

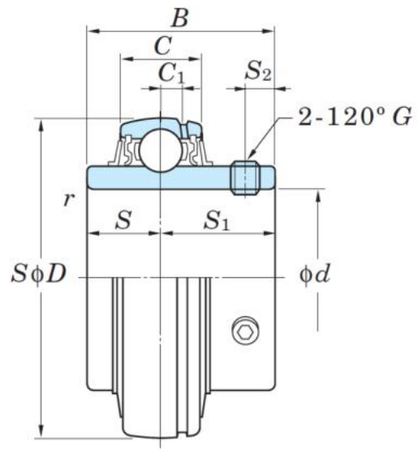

UC

Shaft Dia		Dimensions								Basic Load ratingskN		Factor	Bearing No.		Dimensions								Set Screw Brg. Bore		Mass kg
mm	inch	D		B		C		r (min.)							C1		S		S1		S2		G		
d		mm	inch	mm	inch	mm	inch	mm	inch	Cr	C0r	f 0	L2 & L3 Type		mm	inch	mm	inch	mm	inch	mm	inch	mm	inch	
75	-	130	5.118	77.8	3.063	32	1.260	1.5	0.059	67.4	48.3	14.5	UC215L3		9	0.354	33.3	1.311	44.5	1.752	12	0.472	M12x1.5	-	2.21
-	3 1/8	140	5.512	82.6	3.252	33	1.299	2	0.079	72.7	53.0	14.6	UC216-50L3		9	0.354	33.3	1.311	49.3	1.941	14	0.551	-	1/2-20UNF	2.84
80	-	140	5.512	82.6	3.252	33	1.299	2	0.079	72.7	53.0	14.6	UC216L3		9	0.354	33.3	1.311	49.3	1.941	14	0.551	M12x15	-	2.79
-	3 1/4	150	5.906	85.7	3.374	35	1.378	2	0.079	84	61.9	14.5	UC217-52L3		10	0.394	34.1	1.343	51.6	2.031	14	0.551	-	1/2-20UNF	3.66
85	-	150	5.906	85.7	3.374	35	1.378	2	0.079	84	61.9	14.5	UC217L3		10	0.394	34.1	1.343	51.6	2.031	14	0.551	M12x15	-	3.45
-	3 1/2	160	6.299	96	3780	38	1.496	2	0.079	96.1	71.5	14.5	UC218-56L3		11	0.433	39.7	1.563	56.3	2.217	16	0.591	-	1/2-20UNF	4.46
90	-	160	6.299	96	3.780	38	1.496	2	0.079	96.1	71.5	14.5	UC218L3		11	0.433	39.7	1.563	56.3	2.217	15	0.591	M12x15	-	4.35

Note: L2 = Double Lip, L3 = Triple Lip

Every effort has been taken to ensure that the data listed in this catalogue is correct.
Finer Power Transmissions P/L will not accept liability for any damage or loss caused as a result of the data in this catalogue.

Every effort has been taken to ensure that the data listed in this catalogue is correct.
Finer Power Transmissions P/L will not accept liability for any damage or loss caused as a result of the data in this catalogue.

FYH
Finer Power Transmissions P/L | www.finerpt.com

Bearing Inserts

UC300 Series

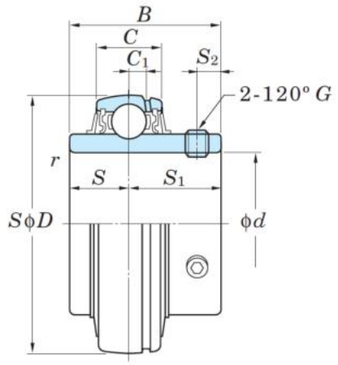

UC

UC300 Series

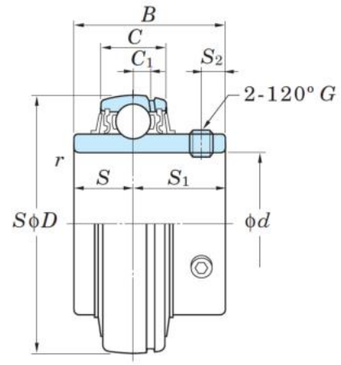

UC

Shaft Dia		Dimensions								Basic Load ratingskN		Factor	Bearing no.			Dimensions								Set Screw Brg. Bore	Mass kg
mm	inch	D		B		C		r (min.)								C1		S		S1		S2		G	
d		mm	inch	mm	inch	mm	inch	mm	inch	Cr	C0r	f 0	Standard	L3 Type*		mm	inch	mm	inch	mm	inch	mm	inch	mm	
25	-	62	2.441	38	1.496	22	0.866	1.1	0.043	21.2	10.9	12.6	UC305	-		6	0.236	15	0.591	23	0.906	6	0.236	M6x0.75	0.45
30	-	72	2.835	43	1.693	24	0.945	1.1	0.043	26.7	15	13.3	UC306	-		6.5	0.256	17	0.669	26	1.024	6	0.236	M6×0.75	0.56
35	-	80	3.150	48	1.890	26	1.024	1.5	0.059	33.4	19.3	13.2	UC307	UC307L3		7.5	0.295	19	0.748	29	1.142	8	0.315	M8x1	0.71
-	1 1/2	90	3.543	52	2.047	28	1.102	1.5	0.059	40.7	24	13.2	UC308-24	UC308-24L3		8	0.315	19	0.748	33	1.299	10	0.394	M10x1.25	1.05
40	-	90	3.543	52	2.047	28	1.102	1.5	0.059	40.7	24	13.2	UC308	UC308L3		8	0.315	19	0.748	33	1.299	10	0.394	M10x1.25	1
-	1 3/4	100	3.937	57	2.244	30	1.181	1.5	0.059	48.9	29.5	13.3	UC309-28	UC309-28L3		8.5	0.335	22	0.866	35	1.378	10	0.394	M10x1.23	1.35
45	-	100	3.937	57	2.244	30	1.181	1.5	0.059	48.9	29.5	13.3	UC309	UC309L3		8.5	0.335	22	0.866	35	1.378	10	0.394	M10x1.25	1.33
-	1 7/8	110	4.331	61	2.402	32	1.26	2	0.079	62	38.3	13.3	UC310-30	UC210-30L3		9	0.354	22	0.866	39	1.535	12	0.472	M12x15	1.69
50	-	110	4.331	61	2.402	32	1.260	2	0.079	62	38.3	13.2	UC310	UC310L3		9	0.354	22	0.866	39	1.535	12	0.472	M12x15	1.69
-	2	120	4.724	66	2.598	34	1.339	2	0.079	71.6	45	13.2	UC311-32	UC311-32L3		10	0.394	25	0.984	41	1.614	12	0.472	M12x1.5	2.08
55	-	120	4.724	66	2.598	34	1.339	2	0.079	71.6	45	13.2	UC311	UC311L3		10	0.394	25	0.984	41	1.614	12	0.472	M12x1.5	1.9
-	2 1/4	130	5.118	91	2.795	36	1.417	2.1	0.083	81.9	52.2	13.2	UC312-36	UC312-36		11.5	0.453	26	1.024	45	1.772	12	0.472	M12x1.5	2.6
60	-	130	5.118	71	2.795	36	1.417	2.1	0.083	81.9	52.2	13.2	UC312	UC312L3		11.5	0.453	26	1.024	45	1.772	12	0.472	M12x1.5	2.6
-	2 1/2	140	5.512	75	2.953	38	1.496	2.1	0.083	92.7	59.9	13.2	UC313-40	UC313-40L3		12	0.472	30	1.181	45	1.772	12	0.472	M12x1.5	3.24
65	-	140	5.512	75	2.953	38	1.496	2.1	0.083	92.7	59.9	13.2	UC313	UC313L3		12	0.472	30	1.181	45	1.772	12	0.472	M12x1.5	3.16
-	2 3/4	150	5.906	78	3.071	40	1.575	2.1	0.083	104	68.2	13.2	UC314-44	UC314-44L3		12.5	0.492	33	1.299	45	1.772	12	0.472	M12x1.5	3.91
70	-	150	5.906	78	3.071	40	1.575	2.1	0.083	104	68.25	13.2	UC314	UC314L3		12.5	0.492	33	1.299	45	1.772	12	0.472	M12x1.5	3.9
-	3	160	6.299	82	3.228	42	1.654	2.1	0.083	113	77.2	13.2	UC315-48	UC315-48L3		14.5	0.571	32	1.260	50	1.969	14	0.551	M14x1.5	4.61
75	-	160	6.299	82	3.228	42	1.654	2.1	0.083	113	77.2	13.2	UC315	UC315L3		14.5	0.571	32	1.260	50	1.969	14	0.551	M14X1.5	4.7
80	-	170	6.693	86	3.386	44	1.732	2.1	0.083	123	86.7	13.3	UC316	UC316L3		15	0.591	34	1.339	52	2.047	14	0.551	M14x1.5	5.6
85	-	180	7.087	96	3.780	46	1.811	3	0.118	133	96.8	13.3	UC317	UC317L3		15	0.591	40	1.575	56	2.205	16	0.630	M16x1.5	6.9
-	3 1/2	190	7.480	96	3.780	48	1.890	3	0.118	143	107	13.3	UC318-56	UC318-56L3		15.5	0.610	40	1.575	56	2.205	16	0.630	M16x1.5	8.03
90	-	190	7.480	96	3.780	48	1.890	3	0.118	143	107	13.3	UC318	UC318L3		15.5	0.610	40	1.575	56	2.205	16	0.630	M16X1.5	7.87
-	4	215	8.465	108	4.252	54	2.126	3	0.118	173	141	13.2	UC320-64	UC320-64L3		18	0.709	42	1.654	66	2.598	20	0.787	M18x1.5	11
100	-	215	8.465	108	4.252	54	2.126	3	0.118	173	141	13.2	UC320	UC320L3		18	0.709	42	1.654	66	2.598	20	0.787	M18x1.5	11.2
110	-	240	9.449	117	4.606	60	2.362	3	0.118	205	180	13.2	UC322	UC322L3		20	0.787	46	1.811	71	2.795	20	0.787	M18x1.5	15.1
120	-	260	10.236	126	4.961	64	2.520	3	0.118	207	185	13.5	UC324	UC324L3		21	0.827	51	2.008	75	2.953	20	0.787	M18x1.5	19
130	-	280	11.024	135	5.315	68	2.677	4	0.157	229	214	13.6	UC326	UC326L3		22	0.866	54	2.126	81	3.189	20	0.787	M20x1.5	23.6
140	-	300	11.811	145	5.709	72	2.835	4	0.157	253	246	13.6	UC328	UC328L3		23	0.906	59	2.323	86	3.386	20	0.787	M20x1.5	29.4

* Not a stocked range although available on request.

Note: L2 = Double Lip, L3 = Triple Lip

Every effort has been taken to ensure that the data listed in this catalogue is correct.
Finer Power Transmissions P/L will not accept liability for any damage or loss caused as a result of the data in this catalogue.

Every effort has been taken to ensure that the data listed in this catalogue is correct.
Finer Power Transmissions P/L will not accept liability for any damage or loss caused as a result of the data in this catalogue.

FYH
Finer Power Transmissions P/L | www.finerpt.com

Bearing Inserts

ER200 Series

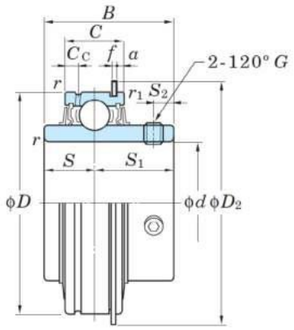

ER

ER200 Series

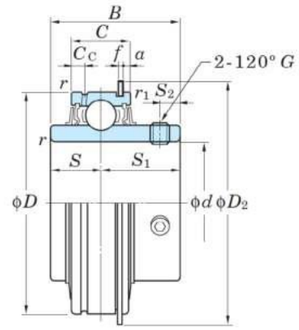

ER

Shaft Dia.		Dimensions (inch , mm)					Basic Load Ratings		Factor	Bearing No.		Dimensions (inch , mm)							Set Screw Brg. Bore		Mass(kg)
mm	inch						kN												G		
d		D	B	C	r (min.)	r1 (min.)	Cr	COr	f 0	ER		S	S1	S2	Cc	a	f	D2	mm	inch	ER
-	5/8	47	31	16	0.6	0.5	12.8	6.65	13.2	ER202-10		12.7	18.3	5	4	2.38	1.07	52.5	-	1/4-28UNF	0.25
15	-	47	31	16	0.6	0.5	12.8	6.65	13.2	ER202		12.7	18.3	5	4	2.38	1.07	52.5	M6x0.76	1/4-28UNF	0.25
17	-	47	31	16	0.6	0.5	12.8	6.65	13.2	ER203		12.7	18.3	5	4	2.38	1.07	52.5	M6x0.77	1/4-28UNF	0.24
–	3/4	1.85	1.22	0.63	0.039	0.02	12.8	6.65	13.2	ER204-12		0.5	0.72	0.197	0.157	0.094	0.042	2.067	–	1/4-28UNF	0.22
20	–	47	31	16	1	0.5	12.8	6.65	13.2	ER204		12.7	18.3	5	4	2.38	1.07	52.5	M6×0.75	–	0.22
-	7/8	2.047	1.343	0.748	0.039	0.02	14	7.85	13.9	ER205-14		0.563	0.78	0.217	0.197	0.094	0.042	2.272	-	1/4-28UNF	0.3
	15/16	2.047	1.343	0.748	0.039	0.02	14	7.85	13.9	ER205-15		0.563	0.78	0.217	0.197	0.094	0.042	2.272	-	1/4-28UNF	0.28
–	1	2.047	1.343	0.748	0.039	0.02	14	7.85	13.9	ER205-16		0.563	0.78	0.217	0.197	0.094	0.042	2.272	–	1/4-28UNF	0.27
25	–	52	34.1	19	1	0.5	14	7.85	13.9	ER205		14.3	19.8	5.5	5	2.38	1.07	57.7	M6×0.75	–	0.27
-	1 1/2	2.441	1.5	0.866	0.039	0.02	19.5	11.3	13.9	ER206-18		0.626	0.874	0.236	0.217	0.125	0.065	2.657	-	1/4-28UNF	0.41
-	1 3/16	2.441	1.5	0.866	0.039	0.02	19.5	11.3	13.9	ER206-19		0.626	0.874	0.236	0.217	0.125	0.065	2.657	-	1/4-28UNF	0.39
–	1 1/4	2.441	1.5	0.866	0.039	0.02	19.5	11.3	13.9	ER206-20		0.626	0.874	0.236	0.217	0.125	0.065	2.657	–	1/4-28UNF	0.37
30	–	62	38.1	22	1	0.5	19.5	11.3	13.9	ER206		15.9	22.2	6	5.5	3.18	1.65	67.5	M6×0.75	–	0.39
–	1 1/4	2.835	1.689	0.945	0.043	0.02	25.7	15.4	13.9	ER207-20		0.689	1	0.256	0.217	0.125	0.065	3.087	–	5/16-24UNF	0.69
	1 3/2	2.835	1.689	0.945	0.043	0.02	25.7	15.4	13.9	ER207-22		0.689	1	0.256	0.217	0.125	0.065	3.087	-	5/16-24UNF	0.64
–	1 7/16	2.835	1.689	0.945	0.043	0.02	25.7	15.4	13.9	ER207-23		0.689	1	0.256	0.217	0.125	0.065	3.087	–	5/16-24UNF	0.61
35	–	72	42.9	24	1.1	0.5	25.7	15.4	13.9	ER207		17.5	25.4	6.5	5.5	3.18	1.65	78.4	M8×1	–	0.63
–	1 1/2	3.15	1.937	1.102	0.043	0.02	29.1	17.8	14	ER208-24		0.748	1.189	0.315	0.236	0.125	0.065	3.402	–	5/16-24UNF	0.85
40	–	80	49.2	28	1.1	0.5	29.1	17.8	14	ER208		19	30.2	8	6	3.18	1.65	86.4	M8×1	–	0.81
-	1 5/8	3.346	1.937	1.102	0.043	0.02	34.1	21.3	14	ER209-26		0.748	1.189	0.315	0.236	0.125	0.065	3.598	–	5/16-24UNF	1.0
–	1 3/4	3.346	1.937	1.102	0.043	0.02	34.1	21.3	14	ER209-28		0.748	1.189	0.315	0.236	0.125	0.065	3.598	–	5/16-24UNF	0.92
45	–	85	49.2	28	1.1	0.5	34.1	21.3	14	ER209		19	30.2	8	6	3.18	1.65	91.4	M8×1	–	0.9
–	1 7/8	3.543	2.031	1.102	0.043	0.02	35.1	23.3	14.4	ER210-30		0.748	1.283	0.354	0.295	0.125	0.095	3.791	–	3/8-24UNF	1.05
50	–	90	51.6	28	1.1	0.5	35.1	23.3	14.4	ER210		19	32.6	9	7.5	3.18	2.41	96.3	M10×1.25	–	0.98
60	–	110	65.1	32	1.5	0.5	52.4	36.2	14.4	ER212		25.4	39.7	10.5	7.5	3.18	2.41	116.4	M10×1.25	–	1.89

BOOK 7. BEARINGS – KOYO
7.2 PREMIUM FYH BEARINGS

Every effort has been taken to ensure that the data listed in this catalogue is correct.
Finer Power Transmissions P/L will not accept liability for any damage or loss caused as a result of the data in this catalogue.

Every effort has been taken to ensure that the data listed in this catalogue is correct.
Finer Power Transmissions P/L will not accept liability for any damage or loss caused as a result of the data in this catalogue.

FYH
Finer Power Transmissions P/L | www.finerpt.com

Bearing Inserts

UCX00 Series

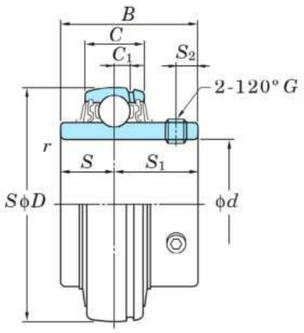

UCX

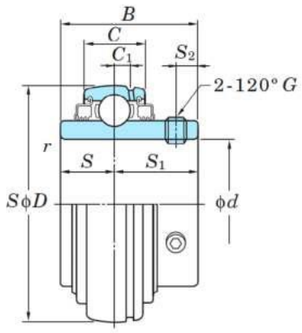

UCX-L3

UCX00 Series

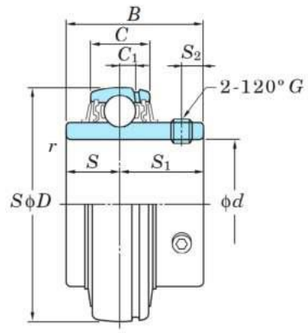

UCX

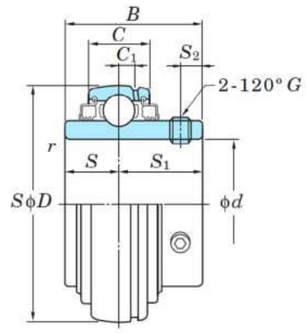

UCX-L3

Shaft Dia		Dimensions								Basic Load ratingskN		Factor	Bearing no.			Dimensions								Set Screw Brg. Bore		Mass kg
mm	inch	D		B		C		r (min.)								C1		S		S1		S2		G		
d		mm	inch	mm	inch	mm	inch	mm	inch	Cr	C0r	f 0	Standard	L3 Type*		mm	inch	mm	inch	mm	inch	mm	inch	mm	inch	
-	1	62	2.441	38.1	1.5	19	0.748	1	0.039	19.5	11.3	13.9	UCX05-16	UCX05-16L3		5	0.197	15.9	0.626	22.2	0.874	6	0.236	–	1/4-28UNF	0.38
25	-	62	2.441	38.1	1.5	19	0.748	1	0.039	19.5	11.3	13.9	UCX05	UCX05L3		5	0.197	15.9	0.626	22.2	0.874	6	0.236	M6×0.75	–	0.39
30	-	72	2.835	42.9	1.689	20	0.787	1	0.039	25.7	15.4	13.9	UCX06	UCX06L3		6	0.217	19	0.689	25.4	1	6.5	0.256	M8×1	–	0.58
-	1 7/16	80	3.150	49.2	1.937	21	0.827	1.1	0.043	29.1	17.8	13.9	UCX207-23	UCX207-23L3		6	0.236	17.5	0.748	30.2	1.189	8	0.315	–	5/16-24UNF	0.72
35	-	80	3.150	49.2	1.937	21	0.827	1.1	0.043	29.1	17.8	13.9	UCX07	UCX07L3		5.5	0.236	19	0.748	30.2	1.189	8	0.315	M8×1	–	0.48
-	1 1/2	85	3.346	49.2	1.937	22	0.866	1.1	0.043	34.1	21.3	14	UCX08-24	UCX08-24L3		6	0.236	19	0.748	30.2	1.189	8	0.315	–	5/16-24UNF	0.87
40	-	85	3.346	49.2	1.937	22	0.866	1.1	0.043	34.1	21.3	14	UCX08	UCX08L3		6	0.236	19	0.748	30.2	1.189	8	0.315	M8×1	–	0.83
-	1 3/4	90	3.543	51.6	2.031	24	0.945	1.1	0.043	35.1	23.3	14.4	UCX09-28	UCX09-28L3		6	0.236	19	0.748	32.6	1.283	9	0.354	–	3/8-24UNF	0.97
45	-	90	3.543	51.6	2.031	24	0.945	1.1	0.043	35.1	23.3	14.4	UCX09	UCX09L3		6	0.236	19	0.748	32.6	1.283	9	0.354	M10×1.25	–	0.95
-	1 7/8	100	3.937	55.6	2.189	25	0.984	1.1	0.043	43.4	29.4	14.4	UCX10-30	-		7	0.276	22.2	0.874	33.4	1.315	9	0.354	-	3/8-24UNF	1.26
-	2	100	3.937	55.6	2.189	25	0.984	1.1	0.043	43.4	29.4	14.4	UCX10-32	UCX10-32L3		7	0.276	22.2	0.874	33.4	1.315	9	0.354	-	3/8-24UNF	1.26
50	-	100	3.937	55.6	2.189	25	0.984	1.1	0.043	43.4	29.4	14.4	UCX10	UCX10L3		7	0.276	22.2	0.874	33.4	1.315	9	0.354	M10x1.25	-	1.29
-	2	110	4.331	65.1	2.563	26	1.024	1.5	0.059	52.4	36.2	14.4	UCX11-32	-		7.5	0.295	25.4	1	39.7	1.563	10.5	0.413	-	–	1.8
55	-	110	4.331	65.1	2.563	27	1.063	1.5	0.059	52.4	36.2	14.4	UCX11	UCX11L3		7.5	0.295	25.4	1	39.7	1.563	10.5	0.413	M10×1.25	–	1.8
-	2-7/16	120	4.724	65.1	2.563	28	1.102	1.5	0.059	57.2	40.1	14.2	UCX12-39	UCX12-39L3		7.5	0.295	25.4	1.000	39.7	1.563	12	0.472	-	1/2-20UNF	1.95
60	-	120	4.724	65.1	2.563	28	1.102	1.5	0.059	57.2	40.1	14.4	UCX12	UCX12L3		7.5	0.295	25.4	1	39.7	1.563	12	0.472	M12×1.5	–	2.05
-	2-1/2	125	4.921	74.6	2.937	30	1.181	1.5	0.059	62.2	44.1	14.5	UCX13-40	UCX13-40L3		9	0.354	30.2	1.189	44.4	1.748	12	0.472	-	1/2-20UNF	2.61
65	-	125	4.921	74.6	2.937	30	1.181	1.5	0.059	62.2	44.1	14.5	UCX13	UCX13-L3		9	0.354	30.2	1.189	44.4	1.748	12	0.472	M12X1.5	-	1.94
-	2-3/4	130	5.118	77.8	3.063	32	1.260	1.5	0.059	67.4	48.3	14.5	UCX14-44	UCX14-44L3		9	0.354	33.3	1.311	44.5	1.752	12	0.472	-	1/2-20UNF	2.75
70	-	130	5.118	77.8	3.063	32	1.260	1.5	0.059	67.4	48.3	14.5	UCX14	UCX14-L3		9	0.354	33.3	1.311	44.5	1.752	12	0.472	M12X1.5	-	2.74
-	3	140	5.512	82.6	3.252	33	1.299	1.5	0.059	72.7	53.0	14.6	UCX15-48	UXC15-48L3		9	0.354	33.3	1.311	49.3	1.941	14	0.551	-	1.2-20UNF	3.32
75	-	140	5.512	82.6	3.252	33	1.299	1.5	0.059	72.7	53.0	14.6	UCX15	UCX15-L3		9	0.354	33.3	1.311	49.3	1.941	14	0.551	M12X1.5	-	3.41
-	3 1/8	150	5.906	85.7	3.374	34	1.339	2	0.079	84.0	61.9	14.5	UCX16-50	-		10	0,394	34.1	1.343	51.6	2.031	14	0.551	-	-	3.87
80	-	150	5.906	85.7	3.374	35	1.378	2	0.079	84.0	61.9	14.5	UCX16	UCX16-L3		10	0,394	34.1	1.343	51.6	2.031	14	0.551	M12X1.5	-	3.87
-	3 1/4	160	6.299	96.012	3.78	37.998	1.496	2	0.079	96.1	71.5	14.5	UCX17-52	-		11	0.433	39.7	1.563	56.3	2.217	15	0.591	-	-	5.05
85	-	160	6.299	96	3.780	38	1.496	2	0.079	96.1	71.5	14.5	UCX17	UCX17-L3		11	0.433	39.7	1.563	56.3	2.217	15	0.591	M12X1.5	-	5.05
-	3 1/2	170	6.693	103.988	4.094	40	1.575	2	0.079	109	81.9	14.4	UCX18-56	-		11.5	0.453	42.9	1.689	61.1	2.406	16	0.630	-	-	6.00
90	-	170	6.693	104	4.094	40	1.575	2	0.079	109	81.9	14.4	UCX18	-		11.5	0.453	42.9	1.689	61.1	2.406	16	0.630	M14X1.5	-	6.00
-	4	190	7.480	117.5	4.626	43	1.693	2.1	0.083	133	105	14.4	UCX20-64	-		13	0.512	44	1.732	68	2.689	18	0.709	-	5/8-18UNF	8.56
100	-	190	7.480	117.5	4.626	43	1,683	2,1	0.083	133	105	14.4	UCX20	-		13	0.512	49.2	1.937	68.3	2.689	18	0.709	M16X1.5	-	8.56

* Not a stocked range although available on request.

Note: L3 = Triple Lip

Every effort has been taken to ensure that the data listed in this catalogue is correct.
Finer Power Transmissions P/L will not accept liability for any damage or loss caused as a result of the data in this catalogue.

Every effort has been taken to ensure that the data listed in this catalogue is correct.
Finer Power Transmissions P/L will not accept liability for any damage or loss caused as a result of the data in this catalogue.

FYH
Finer Power Transmissions P/L | www.finerpt.com

Bearing Inserts

UC200 Stainless Steel Series

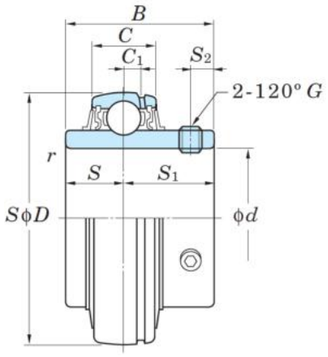

UC

Shaft Dia		Dimensions								Basic Load ratingskN		Factor	Bearing no.
mm	inch	D		B		C		r (min.)					
d		mm	inch	mm	inch	mm	inch	mm	inch	Cr	C0r	f 0	Standard
-	1/2	40	1.575	27.4	1.079	13	0.512	0.6	0.024	8.15	3.85	13.2	SSUC201-8
12	-	40	1.575	27.4	1.079	13	0.512	0.6	0.024	8.15	3.85	13.2	SSUC201
-	5/8	40	1.575	27.4	1.079	13	0.512	0.6	0.024	8.15	3.85	13.2	SSUC202-10
15	-	40	1.575	27.4	1.079	13	0.512	0.6	0.024	8.15	3.85	13.2	SSUC202
17	-	40	1.575	27.4	1.079	13	0.512	0.6	0.024	8.15	3.85	13.2	SSUC203
-	3/4	47	1.85	31	1.22	16	0.63	1	0.039	10.9	5.35	13.2	SSUC204-12
20	-	47	1.85	31	1.22	16	0.63	1	0.039	10.9	5.35	13.2	SSUC204
-	7/8	52	2.047	34.1	1.343	17	0.669	1	0.039	11.9	6.3	13.9	SSUC205-14
-	1	52	2.047	34.1	1.343	17	0.669	1	0.039	11.9	6.3	13.9	SSUC205-16
25	-	52	2.047	34.1	1.343	17	0.669	1	0.039	11.9	6.3	13.9	SSUC205
-	1 1/4	62	2.441	38.1	1.5	19	0.748	1	0.039	16.5	9.05	13.9	SSUC206-20
30	-	62	2.441	38.1	1.5	19	0.748	1	0.039	19.5	11.3	13.9	SSUC206
-	1 1/4	72	2.835	42.9	1.689	20	0.787	1.1	0.043	21.8	12.3	13.9	SSUC207-20
-	1 7/16	72	2.835	42.9	1.689	20	0.787	1.1	0.043	25.7	15.4	13.9	SSUC207-23
35	-	72	2.835	42.9	1.689	20	0.787	1.1	0.043	25.7	15.4	13.9	SSUC207
-	1 1/2	80	3.15	49.2	1.937	21	0.827	1.1	0.043	24.8	14.3	14	SSUC208-24
40	-	80	3.15	49.2	1.937	21	0.827	1.1	0.043	24.8	14.3	14	SSUC208
-	1 3/4	85	3.346	49.2	1.937	22	0.866	1.1	0.043	27.8	16.2	14	SSUC209-28
45	-	85	3.346	49.2	1.937	22	0.866	1.1	0.043	27.8	16.2	14	SSUC209
50	-	90	3.543	51.6	2.031	24	0.945	1.1	0.043	29.8	18.6	14.4	SSUC210
-	2	100	3.937	55.6	2.189	25	0.984	1.5	0.059	36.8	23.5	14.4	SSUC211-32
55	-	100	3.937	55.6	2.189	25	0.984	1.5	0.059	36.8	23.5	14.4	SSUC211
-	2 3/16	100	3.937	55.6	2.189	25	0.984	1.5	0.059	36.8	23.5	14.4	SSUC211-35
60	-	110	4.331	65.1	2.563	27	1.063	1.5	0.059	44.5	29	14.4	SSUC212

UC200 Stainless Steel Series

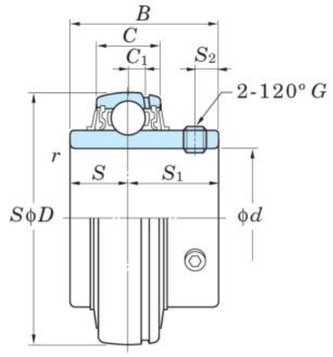

UC

Dimensions										Set Screw Brg. Bore	Mass kg
C1		S		S1		S2		G		
mm	inch	mm	inch	mm	inch	mm	inch				
3.5	0.138	11.5	0.453	15.9	0.626	4	0.158	M5x0.5	0.1
3.5	0.138	11.5	0.453	15.9	0.626	4	0.158	M5x0.5	0.1
3.5	0.138	11.5	0.453	15.9	0.626	4	0.158	M5x0.5	0.1
3.5	0.138	11.5	0.453	15.9	0.626	4	0.158	M5x0.5	0.1
3.5	0.138	11.5	0.453	15.9	0.626	4	0.158	M5x0.5	0.1
4	0.157	12.7	0.5	18.3	0.72	5	0.197	M6×0.75	0.16
4	0.157	12.7	0.5	18.3	0.72	5	0.197	M6×0.75	0.16
5	0.197	14.3	0.563	19.8	0.78	5.5	0.217	M6×0.75	0.23
5	0.197	14.3	0.563	19.8	0.78	5.5	0.217	M6×0.75	0.2
5	0.197	14.3	0.563	19.8	0.78	5.5	0.217	M6×0.75	0.2
5	0.197	15.9	0.626	22.2	0.874	6	0.236	M6×0.75	0.3
5	0.197	15.9	0.626	22.2	0.874	6	0.236	M6×0.75	0.32
5.5	0.217	17.5	0.689	25.4	1	6.5	0.256	M8×1	0.54
5.5	0.217	17.5	0.689	25.4	1	6.5	0.256	M8×1	0.45
5.5	0.217	17.5	0.689	25.4	1	6.5	0.256	M8×1	0.48
6	0.236	19	0.748	30.2	1.189	8	0.315	M8×1	0.68
6	0.236	19	0.748	30.2	1.189	8	0.315	M8×1	0.64
6	0.236	19	0.748	30.2	1.189	8	0.315	M8×1	0.7
6	0.236	19	0.748	30.2	1.189	8	0.315	M8×1	0.68
6	0.236	19	0.748	32.6	1.283	9	0.354	M8×1	0.8
7	0.276	22.2	0.874	33.4	1.315	9	0.354	M10×1.25	1.26
7	0.276	22.2	0.874	33.4	1.315	9	0.354	M10×1.25	1.11
7	0.276	22.2	0.874	33.4	1.315	9	0.354	M10×1.25	1.09
7.5	0.295	25.4	1	39.7	1.563	10.5	0.413	M10×1.25	1.54

Every effort has been taken to ensure that the data listed in this catalogue is correct.
Finer Power Transmissions P/L will not accept liability for any damage or loss caused as a result of the data in this catalogue.

Every effort has been taken to ensure that the data listed in this catalogue is correct.
Finer Power Transmissions P/L will not accept liability for any damage or loss caused as a result of the data in this catalogue.

FYH
Finer Power Transmissions P/L | www.finerpt.com

Bearing Inserts

UK200 Series

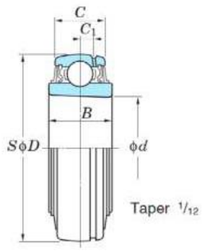

UK

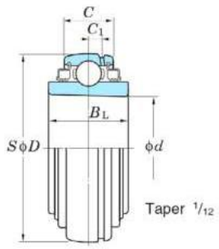

UK-L3

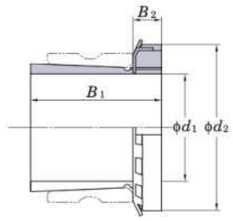

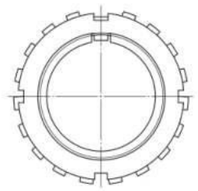

Adapter

UK200 Series

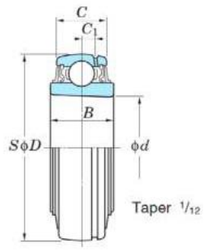

UK

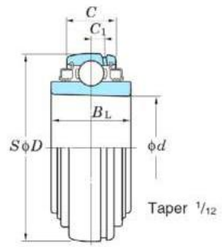

UK-L3

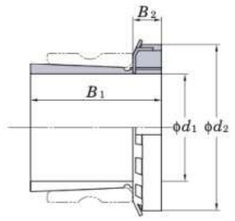

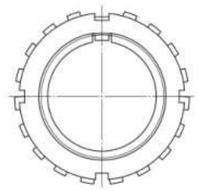

Adapter

Shaft Dia		Dimensions												Basic Load ratingskN		Factor	Bearing no.			Mass kg.		Adapter Sleeve Dimensions (mm, inch)								Mass kg
mm	inch	d		D		B		BL		C		C1										Adapter no. H & HE	B1		B2		d2			
d1		mm	inch	mm	inch	mm	inch	mm	inch	mm	inch	mm	inch	Cr	C0r	f 0	Standard	L3 Type*		Standard	L3 Type		mm (H)	inch (HE)	mm (H)	inch (HE)	mm (H)	inch (HE)		
20	3/4	25	0.984	52	2.047	24	0.945	24	0.945	17	0.669	5	0.197	14	7.85	13.9	UK205	UK205L2		0.18	0.18	HE2305 H2305	35	1.378	8	0.315	38	1.496		0.095
25	1	30	1.181	62	2.441	27	1.063	27	1.063	19	0.748	5	0.197	19.5	11.3	13.9	UK206	UK206L3		0.29	0.29	H2306 HE2306	38	1.496	8	0.315	45	1.772		0.13
30	1 1/8	35	1.378	72	2.835	30	1.181	30	1.181	20	0.787	5.5	0.217	25.7	15.4	13.9	UK207	UK207L3		0.43	0.43	HE2307 H2307	43	1.693	9	0.354	52	2.047		0.17
35	1 1/4	40	1.575	80	3.15	34	1.339	34	1.339	21	0.827	6	0.236	29.1	17.8	14	UK208	UK208L3		0.58	0.58	HE2308 H2308	46	1.811	10	0.394	58	2.283		0.22
40	1 1/2	45	1.772	85	3.346	36	1.417	36	1.417	22	0.866	6	0.236	34.1	21.3	14	UK209	UK209L3		0.65	0.65	HE2309 H2309	50	1.969	11	0.433	65	2.559		0.28
45	1 3/4	50	1.969	90	3.543	36	1.417	36	1.417	24	0.945	6	0.236	35.1	23.3	14.4	UK210	UK210L3		0.65	0.65	HE2310 H2310	55	2.165	12	0.472	70	2.756		0.36
50	2	55	2.165	100	3.937	40	1.575	40	1.575	25	0.984	7	0.276	43.4	29.4	14.4	UK211	UK211L3		1.09	1.09	HE2311 H2311	59	2.323	12	0.472	75	2.953		0.42
55	2 1/8	60	2.362	110	4.331	47	1.85	47	1.85	27	1.063	7.5	0.295	52.4	36.2	14.4	UK212	UK212L3		1.41	1.41	HE2312 H2312	62	2.441	13	0.512	80	3.15		0.48
60	2 1/4	65	2.559	120	4.724	36	1.417	47	1.85	28	1.102	7.5	0.295	57.2	40.1	14.4	UK213	UK213L3		1.34	1.67	HE2313 H2313	65	2.559	14	0.551	85	3.346		0.56
65	2 1/2	75	2.953	130	5.118	40	1.575	51	2.008	32	1.26	9	0.354	67.4	48.3	14.5	UK215	UK215L3		1.5	1.99	HE2315 H2315	73	2.874	15	0.591	98	3.858		1.05
70	2 3/4	80	3.15	140	5.512	42	1.654	55	2.165	33	1.299	9	0.354	72.7	53	14.6	UK216	UK216L3		1.96	2.56	HE2316 H2316	78	3.071	17	0.669	105	4.134		1.3
75	3	85	3.346	150	5.906	57	1.732	57	2.244	35	1.378	10	0.394	84	61.9	14.5	UK217	UK217L3		2.42	3.1	HE2317 H2317	82	3.228	18	0.709	110	4.331		1.45
80	–	90	3.543	160	6.299	48	1.89	63	2.48	38	1.496	11	0.433	96.1	71.5	14.5	UK218	UK218L3		2.9	3.77	H2318	86	3.386	18	0.709	120	4.724		1.7

* Not a stocked range although available on request.

Note: L2 = Double Lip, L3 = Triple Lip

Every effort has been taken to ensure that the data listed in this catalogue is correct.
Finer Power Transmissions P/L will not accept liability for any damage or loss caused as a result of the data in this catalogue.

Every effort has been taken to ensure that the data listed in this catalogue is correct.
Finer Power Transmissions P/L will not accept liability for any damage or loss caused as a result of the data in this catalogue.

BOOK 7: BEARINGS – KOYO

7.2 PREMIUM FYH BEARINGS

FYH
Finer Power Transmissions P/L | www.finerpt.com

Bearing Inserts

UK300 Series

UK300 Series

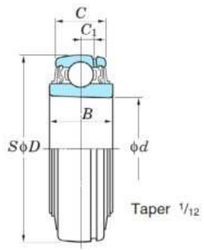

UK

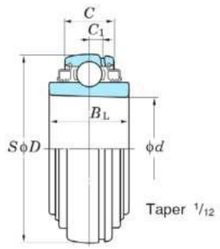

UK-L3

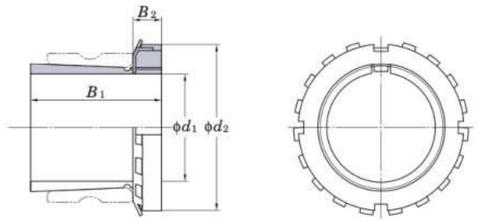

Adapter

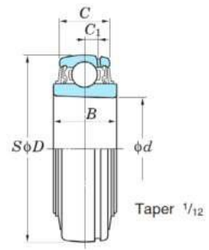

UK

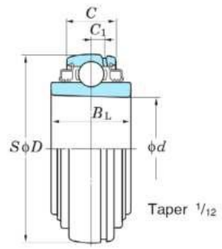

UK-L3

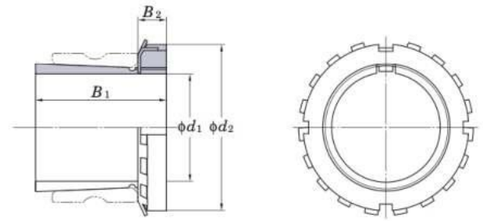

Adapter

Shaft Dia		Dimensions												Basic Load ratingskN		Factor	Bearing no.			Mass kg.		Adapter Sleeve Dimensions (mm, inch)								Mass kg
mm	inch	d		D		B		BL		C		C1										Adapter no. H & HE	B1		B2		d2			
d1		mm	inch	mm	inch	mm	inch	mm	inch	mm	inch	mm	inch	Cr	C0r	f 0	Standard	L3 Type*		Standard	L3 Type		mm (H)	inch (HE)	mm (H)	inch (HE)	mm (H)	inch (HE)		
20	3/4	25	0.984	62	2.441	27	1.063	-	-	22	0.866	6	0.236	21.2	10.9	13.9	UK305	-		0.4	-	HE2305 H2305	35	1.378	8	0.315	38	1.496		0.095
25	1	30	1.181	72	2.835	30	1.181	-	-	24	0.945	6.5	0.256	26.7	15	13.3	UK306	-		0.47	-	H2306 HE2306	38	1.496	8	0.315	45	1.772		0.13
30	1 1/8	35	1.378	80	3.15	33	1.299	33	1.299	26	1.024	7.5	0.295	33.4	19.3	13.2	UK307	UK307L3		0.6	0.6	HE2307 H2307	43	1.693	9	0.354	52	2.047		0.17
35	1 1/4	40	1.575	90	3.543	35	1.378	35	1.378	28	1.102	8	0.315	40.7	24	13.2	UK308	UK308L3		0.8	0.8	HE2308 H2308	46	1.811	10	0.394	58	2.283		0.22
40	1 1/2	45	1.772	100	3.937	38	1.496	38	1.496	30	1.181	8.5	0.335	48.9	29.5	13.3	UK309	UK309L3		1.08	1.08	HE2309 H2309	50	1.969	11	0.433	65	2.559		0.28
45	1 3/4	50	1.969	110	4.331	40	1.575	40	1.575	32	1.26	9	0.354	62	38.3	13.2	UK310	UK310L3		1.38	1.38	HE2310 H2310	55	2.165	12	0.472	70	2.756		0.36
50	2	55	2.165	120	4.724	43	1.693	43	1.693	34	1.339	10	0.394	71.6	45	13.2	UK311	UK311L3		1.78	1.78	H2311 HE2311	59	2.323	12	0.472	75	2.953		0.42
55	2 1/8	60	2.362	130	5.118	47	1.85	47	1.85	36	1.417	11.5	0.453	81.9	52.2	13.2	UK312	UK312L3		2.06	2.06	HE2312 H2312	62	2.441	13	0.512	80	3.15		0.48
60	2 1/4	65	2.559	140	5.512	49	1.929	49	1.929	38	1.496	12	0.472	92.7	59.9	13.2	UK313	UK313L3		2.71	2.71	HE2313 H2313	65	2.559	14	0.551	85	3.346		0.56
65	2 1/2	75	2.953	160	6.299	55	2.165	55	2.165	42	1.654	14.5	0.571	113	77.2	13.2	UK315	UK315L3		3.8	3.8	HE2315 H2315	73	2.874	15	0.591	98	3.858		1.05
70	2 3/4	80	3.15	170	6.693	55	2.165	55	2.165	44	1.732	15	0.591	123	86.7	13.3	UK316	UK316L3		4.39	4.39	HE2316 H2316	78	3.071	17	0.669	105	4.134		1.3
75	3	85	3.346	180	7.087	60	2.362	60	2.362	46	1.811	15	0.591	133	96.8	13.3	UK317	UK317L3		5.3	5.3	H2317 HE2317	82	3.228	18	0.709	110	4.331		1.45
80	-	90	3.543	190	7.48	60	2.362	60	2.362	48	1.89	15.5	0.61	143	107	13.3	UK318	UL318L3		7.31	7.31	H2318	86	3.386	18	0.709	120	4.724		1.7
90	3 1/2	100	3.937	215	8.465	68	2.677	68	2.677	54	2.216	18	0.709	173	141	13.2	UK320	UK320L3		8.7	8.7	HE2320 H2320	97	3.819	20	0.787	130	5.118		2.2
100	4	110	4.331	240	9.449	78	3.071	78	3.071	60	2.362	20	0.787	205	180	13.2	UK322	UK322L3		12.2	12.2	H2322 HE2322	150	4.134	21	0.827	145	5.709		2.75
110	-	120	4.724	260	10.236	87	3.425	87	3.425	64	2.52	21	0.827	207	185	13.5	UK324	UK324L3		16.1	16.1	H2324	112	4.409	22	0.866	155	6.102		3.2
115	4 1/2	130	5.118	280	11.024	87	3.425	87	3.425	68	2.677	22	0.866	229	214	13.6	UK326	UK326L3		18.8	18.8	HE2326 H2326	121	4.764	23	0.906	165	6.496		4.6
125	-	140	5.512	300	11.811	97	3.819	97	3.819	72	2.835	23	0.906	253	246	13.6	UK328	UK328L3		23.9	23.9	H2328	131	5.157	24	0.945	180	7.087		5.5

* Not a stocked range although available on request.

Note: L3 = Triple Lip

Every effort has been taken to ensure that the data listed in this catalogue is correct.
Finer Power Transmissions P/L will not accept liability for any damage or loss caused as a result of the data in this catalogue.

Every effort has been taken to ensure that the data listed in this catalogue is correct.
Finer Power Transmissions P/L will not accept liability for any damage or loss caused as a result of the data in this catalogue.

FYH
Finer Power Transmissions P/L | www.finerpt.com
Bearing Inserts

UKX00 Series

UKX00 Series

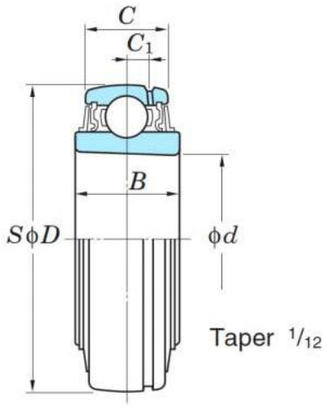

UKX

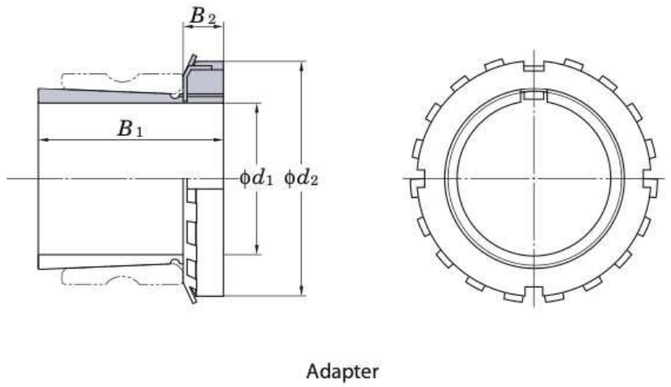

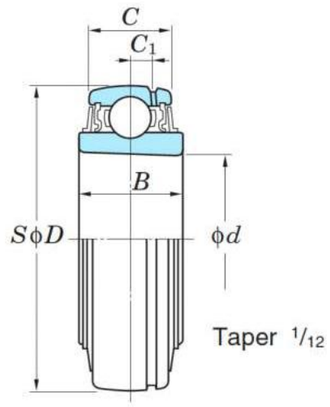

UKX

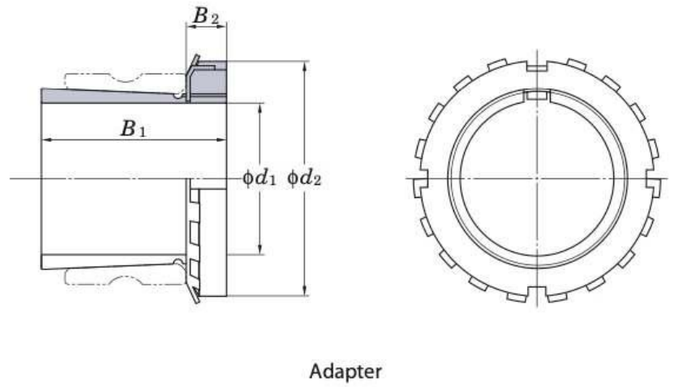

Shaft Dia		Dimensions										Basic Load ratingskN		Factor	Bearing no.		Adapter Sleeve Dimensions (mm, inch)							Mass kg
mm	inch	d		D		B		C		C1							Adapter no.	B1		B2		d2		Adapter
d1		mm	inch	mm	inch	mm	inch	mm	inch	mm	inch	Cr	C0r	f 0	Standard			mm (H)	inch (HE)	mm (H)	inch (HE)	mm (H)	inch (HE)	
20	3/4	25	0.984	62	2.441	27	1.063	19	0.748	5	0.197	19.5	11.3	13.9	UKX05		HE2305 H2305	35	1.378	8	0.315	38	1.496	0.095
25	1	30	1.181	72	2.835	30	1.181	20	0.787	5.5	0.217	25.7	15.4	13.9	UKX06		HE2306 H2306	38	1.496	8	0.315	45	1.772	0.13
30	1 1/8	35	1.378	80	3.15	34	1.339	21	0.827	6	0.236	29.1	17.8	14	UKX07		HE2307 H2307	43	1.693	9	0.354	52	2.047	0.17
35	1 1/4	40	1.575	85	3.346	36	1.417	22	0.866	6	0.236	34.1	21.3	14	UKX08		HE2308 H2308	46	1.811	10	0.394	58	2.283	0.22
40	1 1/2	45	1.772	90	3.543	36	1.417	24	0.945	6	0.236	35.1	23.3	14.4	UKX09		HE2309 H2309	50	1.969	11	0.433	65	2.559	0.28
45	1 3/4	50	1.969	100	3.937	40	1.575	25	0.984	7	0.276	43.4	29.4	14.4	UKX10		HE2310 H2310	55	2.165	12	0.472	70	2.756	0.36
50	2	55	2.165	110	4.331	47	1.85	27	1.063	7.5	0.295	52.4	36.2	14.4	UKX11		HE2311 H2311	59	2.323	12	0.472	75	2.953	0.42
55	2 1/8	60	2.362	120	4.724	36	1.417	28	1.102	7.5	0.295	57.2	40.1	14.4	UKX12		HE2312 H2312	62	2.441	13	0.512	80	3.15	0.48
60	2 1/4	65	2.559	130	5.118	40	1.575	32	1.26	9	0.354	67.4	48.3	14.5	UKX13		HE2313 H2313	65	2.559	14	0.551	85	3.346	0.56
65	2 1/2	75	2.953	140	5.512	42	1.654	33	1.299	9	0.354	72.7	53	14.6	UKX15		HE2315 H2315	73	2.874	15	0.591	98	3.858	1.05
70	2 3/4	80	3.15	150	5.906	44	1.732	35	1.378	10	0.394	84	61.9	14.5	UKX16		HE2316 H2316	78	3.071	17	0.669	105	4.134	1.3
75	3	85	3.346	160	6.299	48	1.89	38	1.496	11	0.433	96.1	71.5	14.5	UKX17		HE2317 H2317	82	3.228	18	0.709	110	4.331	1.45
80	–	90	3.543	170	6.693	50	1.969	40	1.575	11.5	0.453	109	81.9	14.4	UKX18		H2318	86	3.386	18	0.709	120	4.724	1.7
90	3 1/2	100	3.937	190	7.48	54	2.126	43	1.693	13	0.512	133	105	14.4	UKX20		HE2320 H2320	97	3.819	20	0.787	130	5.118	2.2

Every effort has been taken to ensure that the data listed in this catalogue is correct.
Finer Power Transmissions P/L will not accept liability for any damage or loss caused as a result of the data in this catalogue.
Every effort has been taken to ensure that the data listed in this catalogue is correct.
Finer Power Transmissions P/L will not accept liability for any damage or loss caused as a result of the data in this catalogue.

FYH
Finer Power Transmissions P/L | www.finerpt.com
Bearing Housings

P200 Series

P200 Series

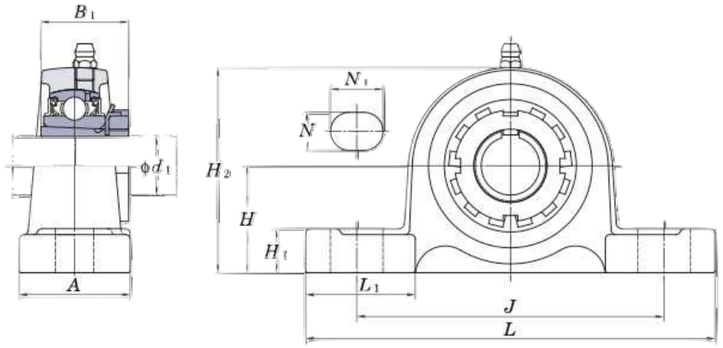

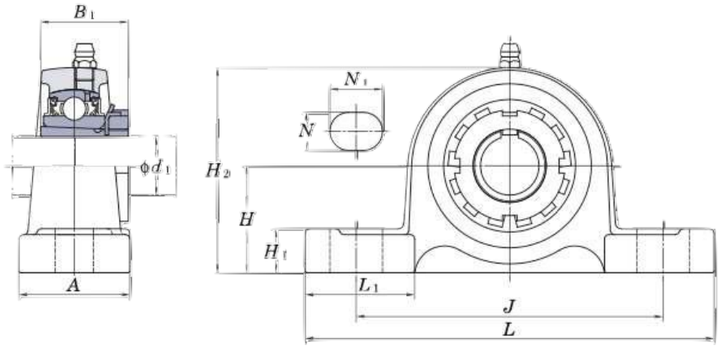

Housing Number	Dimensions																								Bolt Size	
	H		L		A		J		N		N1			H1		H2		L1		B		S				
	mm	inch	mm	inch	mm	inch	mm	inch	mm	inch	mm	inch		mm	inch	mm	inch	mm	inch	mm	inch	mm	inch		mm	inch
P203	30.2	1.188	127	5	38	1.5	95	3.75	13	0.5	18	0.719		16	0.625	60	2.375	36	1.406	31	1.22	12.7	0.5		M10	0.375
P204	33.3	1.313	127	5	38	1.5	95	3.75	13	0.5	18	0.719		16	0.625	65	2.563	36	1.406	31	1.22	12.7	0.5		M10	0.375
P205	36.5	1.433	140	5.5	38	1.5	105	4.125	13	0.5	18	0.719		16	0.625	70	2.75	38	1.5	34.1	1.343	14.3	0.563		M10	0.375
P206	42.9	1.688	165	6.5	48	1.875	121	4.75	17	0.656	21	0.813		17	0.656	84	3.313	48	1.875	38.1	1.5	15.9	0.626		M14	0.5
P207	47.6	1.875	167	6.563	48	1.875	127	5	17	0.656	21	0.813		18	0.719	95	3.375	47	1.844	42.9	1.689	17.5	0.689		M14	0.5
P208	49.2	1.937	184	7.25	54	2.125	137	5.406	17	0.656	21	0.813		18	0.719	98	3.843	53	2.093	49.2	1.937	19	0.748		M14	0.5
P209	54	2.125	190	7.468	54	2.125	146	5.75	17	0.656	21	0.813		20	0.781	106	4.188	55	2.156	49.2	1.937	19	0.748		M14	0.5
P210	57.2	2.25	206	8.125	60	2.375	159	6.25	20	0.781	22	0.875		21	0.813	113	4.438	60	2.375	51.6	2.031	19	0.748		M16	0.625
P211	63.5	2.5	219	8.625	60	2.375	171	6.719	20	0.781	22	0.875		23	0.906	125	4.906	65	2.563	55.6	2.189	22.2	0.874		M16	0.625
P212	69.8	2.75	241	2.5	70	2.75	184	7.25	20	0.781	25	0.969		25	0.969	138	5.438	73	2.875	65	2.563	25.4	1		M16	0.625
P213	76.2	3	265	10.438	70	2.75	203	8	25	0.969	30	1.188		27	1.063	150	5.906	78	3.063	65.1	2.563	25.4	1		M20	0.75
P214	79.4	3.125	266	10.469	72	2.844	210	8.281	25	0.969	30	1.188		27	1.063	157	6.188	75	2.938	74.6	2.937	30.2	1.189		M20	0.75
P215	82.6	3.25	275	10.813	74	2.906	217	8.531	25	0.969	30	1.188		28	1.094	162	6.375	78	3.063	77.8	3.063	33.3	1.311		M20	0.75
P216	88.9	3.5	292	11.5	78	3.063	232	7.125	25	0.969	35	1.375		30	1.188	174	6.844	83	3.281	82.6	3.252	33.3	1.311		M20	0.75
P217	95.2	3.75	310	12.219	83	3.281	247	9.719	25	0.969	35	1.375		32	1.25	185	7.281	87	3.438	85.7	3.374	34.1	1.343		M20	0.75
P218	101.6	4	327	12.875	88	3.469	262	10.313	27	1.063	40	1.563		33	1.313	198	7.781	94	3.688	96	3.78	39.7	1.563		M22	0.875

BOOK 7: BEARINGS – KOYO
7.2 PREMIUM FYH BEARINGS

Every effort has been taken to ensure that the data listed in this catalogue is correct.
Finer Power Transmissions P/L will not accept liability for any damage or loss caused as a result of the data in this catalogue.
Every effort has been taken to ensure that the data listed in this catalogue is correct.
Finer Power Transmissions P/L will not accept liability for any damage or loss caused as a result of the data in this catalogue.

FYH
Finer Power Transmissions P/L | www.finerpt.com
Bearing Housings

P300 Series

P300 Series

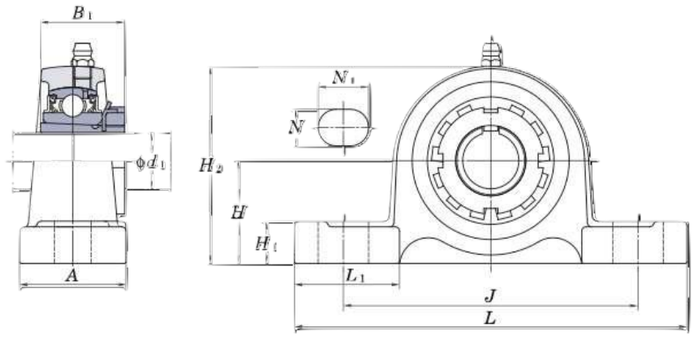

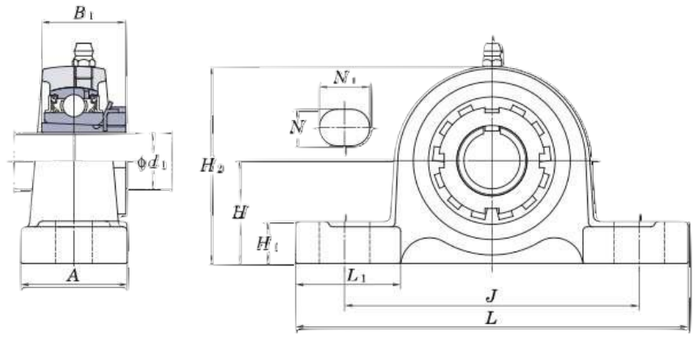

Housing Number	Dimensions																								Bolt Size	
	H		L		A		J		N		N1			H1		H2		L1		B		S				
	mm	inch	mm	inch	mm	inch	mm	inch	mm	inch	mm	inch		mm	inch	mm	inch	mm	inch	mm	inch	mm	inch		mm	inch
P305	45	1 49/64	175	6 7/8	45	1 3/4	132	5 3/16	17	21/32	20	25/32		16	5/8	85	3 11/32	55	2 5/32	38	1.496	15	0.591		M14	1/2
P306	50	1 31/32	180	7 3/32	50	1 31/32	140	5 1/2	17	21/32	20	25/32		17	21/32	95	3 3/4	53	2 3/32	43	1.693	17	0.669		M14	1/2
P307	56	2 13/64	210	8 9/32	56	2 7/32	160	6 5/16	17	21/32	25	31/32		19	3/4	107	4 7/32	65	2 9/16	48	1.89	19	0.748		M14	1/2
P308	60	2 23/64	220	8 21/32	60	2 3/8	170	6 11/16	17	21/32	27	1 1/16		19	3/4	118	4 21/32	65	2 9/16	52	2.047	19	0.748		M14	1/2
P309	67	2 41/64	245	9 21/32	67	2 5/8	190	7 15/32	20	25/32	30	1 3/16		21	13/16	132	5 3/16	75	2 15/16	57	2.244	22	0.866		M16	5/8
P310	75	2 61/64	275	10 13/16	75	2 15/16	212	8 11/32	20	25/32	35	1 3/8		24	15/16	148	5 13/16	88	3 15/32	61	2.402	22	0.866		M16	5/8
P311	80	3 5/32	310	12 7/32	80	3 5/32	236	9 9/32	20	25/32	38	1 1/2		27	1 1/16	158	6 7/32	90	3 17/32	66	2.598	25	0.984		M16	5/8
P312	85	3 11/32	330	13	85	3 11/32	250	9 27/32	25	31/32	38	1 1/2		29	1 5/32	167	6 9/16	103	4 1/16	71	2.795	26	1.024		M20	3/4
P313	90	3 35/64	340	13 3/8	90	3 17/32	260	10 1/4	25	31/32	38	1 1/2		32	1 1/4	176	6 15/16	110	4 11/32	75	2.953	30	1.181		M20	3/4
P314	95	3 47/64	360	14 3/16	90	3 17/32	280	11 1/32	27	1 1/16	40	1 9/16		35	1 3/8	186	7 5/16	110	4 11/32	78	3.071	33	1.299		M22	7/8
P315	100	3 15/16	380	14 31/32	100	3 15/16	290	11 13/32	27	1 1/16	40	1 9/16		35	1 3/8	198	7 25/32	107	4 7/32	82	3.228	32	1.26		M22	7/8
P316	106	4 11/64	400	15 3/4	110	4 11/32	300	11 13/16	27	1 1/16	40	1 9/16		35	1 3/8	209	8 7/32	120	4 23/32	86	3.386	34	1.339		M22	7/8
P317	112	4 13/32	420	16 17/32	110	4 11/32	320	12 19/32	33	1 5/16	45	1 25/32		40	1 9/16	220	8 21/32	120	4 23/32	96	3.78	40	1.575		M27	1
P318	118	4 41/64	430	16 15/16	110	4 11/32	330	13	33	1 5/16	45	1 25/32		40	1 9/16	234	9 7/32	120	4 23/32	96	3.78	40	1.575		M27	1
P320	140	5 33/64	490	19 9/32	120	4 23/32	380	14 31/32	36	1 13/32	50	1 31/32		46	1 13/16	273	10 3/4	140	5 1/2	108	4.252	42	1.654		M30	1 1/8
P322	150	5 29/32	520	20 15/32	140	5 1/2	400	15 3/4	40	1 9/16	55	2 5/32		50	1 31/32	296	11 21/32	150	5 29/32	117	4.606	46	1.811		M33	1 1/4
P324	160	6 19/64	570	22 7/16	140	5 1/2	450	17 23/32	40	1 9/16	55	2 5/32		50	1 31/32	316	12 7/16	160	6 5/16	126	4.961	51	2.008		M33	1 1/4
P326	180	7 3/32	600	23 5/8	140	5 1/2	480	18 29/32	40	1 9/16	55	2 5/32		50	1 31/32	355	13 21/32	195	7 11/16	135	5.315	54	2.126		M33	1 1/4
P328	200	7 7/8	620	24 13/32	140	5 1/2	500	19 11/16	40	1 9/16	55	2 5/32		60	2 3/8	393	15 15/32	185	7 9/32	145	5.709	59	2.323		M33	1 1/4

Every effort has been taken to ensure that the data listed in this catalogue is correct.
Finer Power Transmissions P/L will not accept liability for any damage or loss caused as a result of the data in this catalogue.
Every effort has been taken to ensure that the data listed in this catalogue is correct.
Finer Power Transmissions P/L will not accept liability for any damage or loss caused as a result of the data in this catalogue.

FYH
Finer Power Transmissions P/L | www.finerpt.com
Bearing Housings

F200 Series

F200 Series

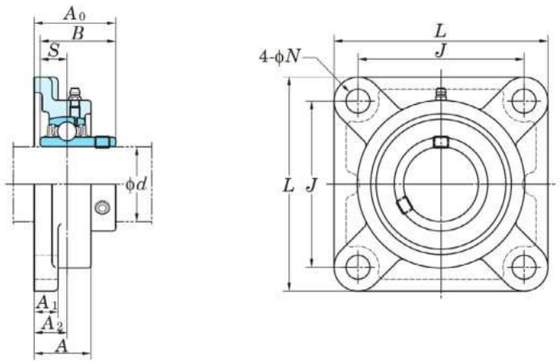

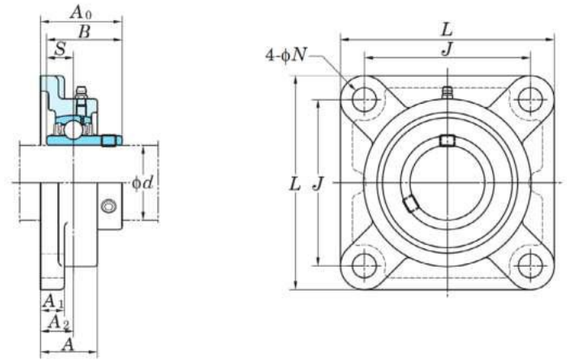

Housing Number	Dimensions									Dimensions										Bolt Size	
	L		A		J		N			A1		A2		A0		B		S			
	mm	inch	mm	inch	mm	inch	mm	inch		mm	inch	mm	inch	mm	inch	mm	inch	mm	inch	mm	inch
F204	86	3.375	25.2	1	64	2.516	12	0.469		11	0.438	15	0.594	33.3	1.313	31	1.22	12.7	0.5	M10	0.375
F205	95	3.75	27	1.063	70	2.75	12	0.469		13	0.5	16	0.625	35.8	1.406	34.1	1.343	14.3	0.563	M10	0.375
F206	108	4.25	31	1.219	83	3.266	12	0.469		13	0.5	18	0.703	40.2	1.594	38.1	1.5	15.9	0.626	M10	0.375
F207	117	4.594	34	1.344	92	3.625	14	0.547		15	0.594	19	0.75	44.4	1.75	42.9	1.689	17.5	0.689	M12	0.438
F208	130	5.125	36	1.406	102	4.016	16	0.625		15	0.594	21	0.828	51.2	2.031	49.2	1.937	19	0.748	M14	0.5
F209	137	5.406	38	1.5	105	4.141	16	0.625		16	0.625	22	0.859	52.2	2.063	49.2	1.937	19	0.784	M14	0.5
F210	143	5.625	40	1.563	111	4.375	16	0.625		16	0.625	22	0.859	54.6	2.156	51.6	2.031	19	0.748	M14	0.5
F211	162	6.375	43	1.688	130	5.125	19	0.75		18	0.719	25	0.985	58.4	2.313	55.6	2.189	22.2	0.874	M16	0.625
F212	175	6.875	48	1.875	143	5.625	19	0.75		18	0.719	29	1.141	68.7	2.719	65.1	2.563	25.4	1	M16	0.625
F213	187	7.375	50	1.969	149	5.859	19	0.75		22	0.875	30	1.188	69.7	2.75	65.1	2.563	25.4	1	M16	0.625
F214	193	7.594	54	2.125	152	5.984	19	0.75		22	0.875	31	1.219	75.4	2.969	74.6	2.937	30.2	1.189	M16	0.625
F215	200	7.875	56	2.219	159	6.266	19	0.75		22	0.875	34	1.344	78.5	3.094	77.8	3.063	33.3	1.311	M16	0.625
F216	208	8.188	58	2.281	165	6.5	23	0.906		22	0.875	34	1.344	83.3	3.281	82.6	3.252	33.3	1.311	M20	0.75
F217	220	8.656	63	2.469	175	6.891	23	0.906		24	0.938	36	1.406	87.6	3.438	85.7	3.374	34.1	1.343	M20	0.75
F218	235	9.25	68	2.688	187	7.359	23	0.906		25	0.969	40	1.563	96.3	3.781	96	3.78	39.7	1.563	M20	0.75

BOOK 7: BEARINGS – KOYO
7.2 PREMIUM FYH BEARINGS

Every effort has been taken to ensure that the data listed in this catalogue is correct.
Finer Power Transmissions P/L will not accept liability for any damage or loss caused as a result of the data in this catalogue.
Every effort has been taken to ensure that the data listed in this catalogue is correct.
Finer Power Transmissions P/L will not accept liability for any damage or loss caused as a result of the data in this catalogue.

FYH
Finer Power Transmissions P/L | www.finerpt.com
Bearing Housings

F300 Series

F300 Series

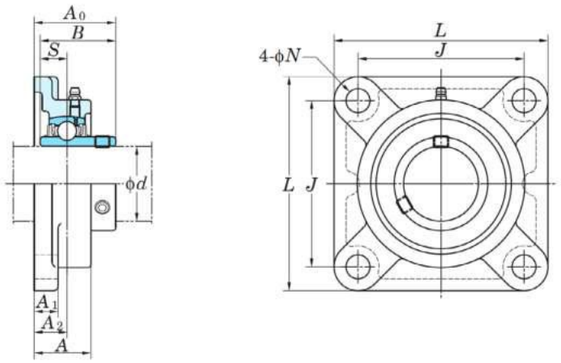

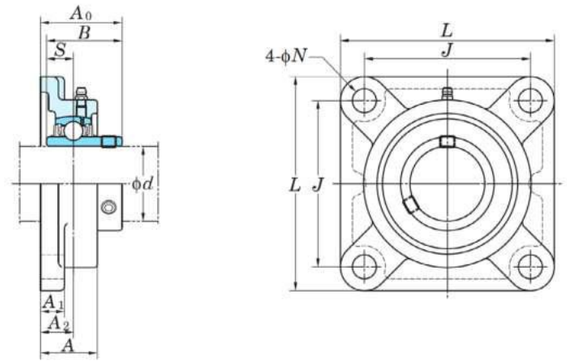

Housing Number	Dimensions									Dimensions										Bolt Size	
	L		A		J		N			A1		A2		A0		B		S			
	mm	inch	mm	inch	mm	inch	mm	inch		mm	inch	mm	inch	mm	inch	mm	inch	mm	inch	mm	inch
F305	110	4 11/32	20	1 5/32	80	3 5/32	16	5/8		13	1/2	16	5/8	39	1 17/32	38	1.496	15	0.591	M14	1/2
F306	125	4 29/32	32	1 1/4	95	3 47/64	16	5/8		15	19/32	18	45/64	44	1 23/32	43	1.693	17	0.669	M14	1/2
F307	135	5 5/16	36	1 13/32	100	3 15/16	19	3/4		16	5/8	20	23/32	49	1 15/16	48	1.89	19	0.748	M16	5/8
F308	150	5 29/32	40	1 9/16	112	4 13/32	19	3/4		17	21/32	23	29/32	56	2 7/32	52	2.047	19	0.748	M16	5/8
F309	160	6 5/16	44	1 23/32	125	4 59/64	19	3/4		18	23/32	25	63/64	60	2 3/8	57	2.244	22	0.866	M16	5/8
F310	175	6 7/8	48	1 7/8	132	5 13/64	23	29/32		19	3/4	28	1 7/64	67	2 5/8	61	2.402	22	0.866	M20	3/4
F311	185	7 9/32	52	2 1/16	140	5 33/64	23	29/32		20	25/32	30	1 3/16	71	2 25/32	66	2.598	25	0.984	M20	3/4
F312	195	7 11/16	56	2 7/32	150	5 29/32	23	29/32		22	7/8	33	1 19/64	78	3 1/16	71	2.795	26	1.024	M20	3/4
F313	208	8 3/16	58	2 9/32	166	6 17/32	23	29/32		22	7/8	33	1 19/64	78	3 1/16	75	2.953	30	1.181	M20	3/4
F314	226	8 29/32	61	2 13/32	178	7 1/64	25	63/64		25	31/32	36	1 1/2	81	3 3/16	78	3.071	33	1.299	M22	7/8
F315	236	9 9/32	66	2 19/32	184	7 1/4	25	63/64		25	31/32	39	1 17/32	89	3 1/2	82	3.228	32	1.26	M22	7/8
F316	250	9 27/32	68	2 11/16	196	7 23/32	31	1 7/32		27	1 1/16	38	1 1/2	90	3 17/32	86	3.386	34	1.339	M27	1
F317	260	10 1/4	74	2 29/32	204	8 1/32	31	1 7/32		27	1 1/16	44	1 47/64	100	3 15/16	96	3.78	40	1.575	M27	1
F318	280	11 1/32	76	3	216	8 1/2	35	1 3/8		30	1 3/16	44	1 47/64	100	3 15/16	96	3.78	40	1.575	M30	1 1/8
F320	310	12 7/32	94	3 11/16	242	9 17/32	38	1 1/2		32	1 1/4	59	2 21/64	125	4 29/32	108	4.252	42	1.654	M33	1 1/4
F322	340	13 3/8	96	3 25/32	266	10 15/32	41	1 39/64		35	1 3/8	60	2 23/64	131	5 5/32	117	4.606	46	1.811	M36	1 3/8
F332	370	14 9/16	110	4 11/32	290	11 27/64	41	1 39/64		40	1 9/16	65	2 9/16	140	5 1/2	126	4.916	51	2.008	M36	1 3/8
F326	410	16 5/32	115	4 17/32	320	12 19/32	41	1 39/64		45	1 25/32	65	2 9/16	146	5 3/4	135	5.135	54	2.126	M36	1 3/8
F328	450	17 23/32	125	4 29/32	350	13 25/32	41	1 39/64		55	2 5/32	75	2 61/64	161	6 11/32	145	5.709	59	2.323	M36	1 3/8

Every effort has been taken to ensure that the data listed in this catalogue is correct.
Finer Power Transmissions P/L will not accept liability for any damage or loss caused as a result of the data in this catalogue.
Every effort has been taken to ensure that the data listed in this catalogue is correct.
Finer Power Transmissions P/L will not accept liability for any damage or loss caused as a result of the data in this catalogue.

PA200 Series

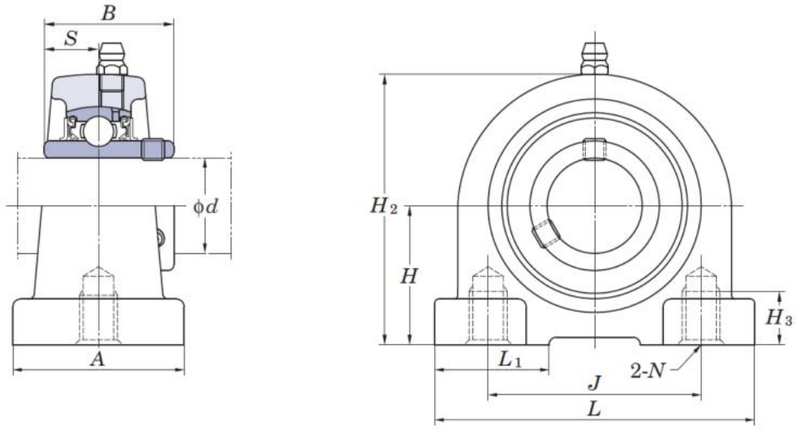

Housing Number	Dimensions									Dimensions											
	H		L		A		J			N		H2		H3		L1		B		S	
	mm	inch	mm	inch	mm	inch	mm	inch		mm	inch	mm	inch	mm	inch	mm	inch	mm	inch	mm	inch
PA204	30.2	1.188	76	3	40	1.563	52	2.047		M10X1.5		60	2.375	13	0.5	27	1.063	31	1.22	12.7	0.5
PA205	36.5	1.438	84	3.313	45	1.781	56	2.203		M10X1.5		71	2.781	13	0.5	30	1.188	34.1	1.343	14.3	0.563
PA206	42.9	1.688	94	3.688	50	1.969	66	2.594		M14X2		84	3.313	18	0.719	36	1.406	38.1	1.5	15.9	0.626
PA207	47.6	1.875	110	4.344	55	2.156	80	3.156		M14X2		93	3.656	20	0.781	41	1.625	42.9	1.689	17.5	0.689
PA208	49.2	1.938	116	4.563	58	2.281	84	3.313		M14X2		98	3.844	20	0.781	41	1.625	49.2	1.937	19	0.748
PA209	54.2	2.141	120	4.719	60	2.375	90	3.547		M14X2		106	4.188	25	0.969	42	1.656	49.2	1.937	19	0.748
PA210	57.2	2.25	130	5.125	64	2.531	94	3.703		M16X2		113	4.438	25	0.969	47	1.844	51.6	2.031	19	0.748

Every effort has been taken to ensure that the data listed in this catalogue is correct.
Finer Power Transmissions P/L will not accept liability for any damage or loss caused as a result of the data in this catalogue.

Bearing Housings
FYH
Finer Power Transmissions P/L | www.finerpt.com
PA200 Series

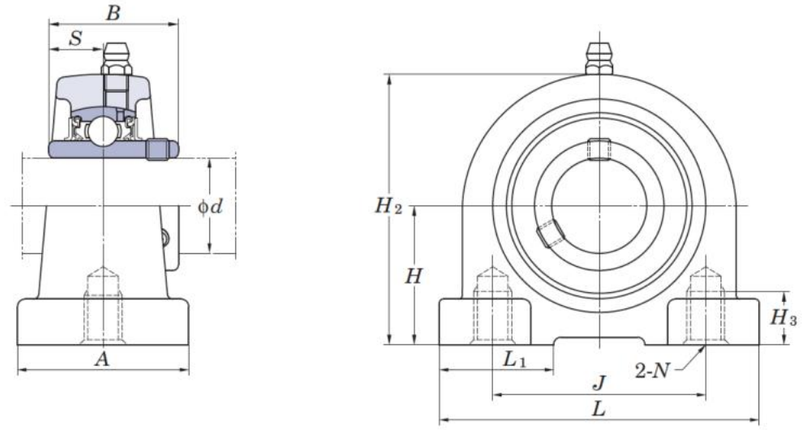

Every effort has been taken to ensure that the data listed in this catalogue is correct.
Finer Power Transmissions P/L will not accept liability for any damage or loss caused as a result of the data in this catalogue.

PX00 Series

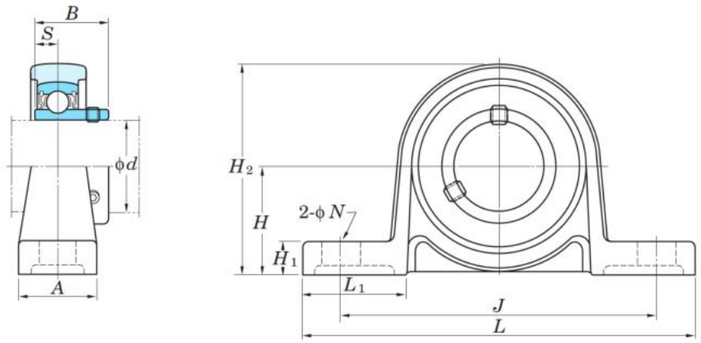

Housing Number	Dimensions																									
	H		L		A		J		N		N1			H1		H2		L1		B		S		Bolt Size	
	mm	inch	mm	inch	mm	inch	mm	inch	mm	inch	mm	inch		mm	inch	mm	inch	mm	inch	mm	inch	mm	inch	mm	inch
PX05	44.4	1.75	159	6.25	51	2	119	4.688	17	0.656	25	0.969		16	0.625	86	3.375	47	1.844	38.1	1.5	15.9	0.626	M14	0.5
PX06	47.6	1.875	175	6.875	57	2.25	127	5	17	0.656	25	0.969		17	0.656	93	3.656	55	2.156	42.9	1.689	17.5	0.689	M14	0.5
PX07	54	2.125	203	8	57	2.25	144	5.656	17	0.656	30	1.188		19	0.75	105	4.125	64	2.531	49.2	1.937	19	0.748	M14	0.5
PX08	58.7	2.313	222	8.75	67	2.625	156	6.156	20	0.781	32	1.25		21	0.813	114	4.5	71	2.781	49.2	1.937	19	0.748	M16	0.625
PX09	58.7	2.313	222	8.75	67	2.625	156	6.156	20	0.781	33	1.312		21	0.813	116	4.563	71	2.781	51.6	2.031	19	0.748	M16	0.625
PX10	63.5	2.5	241	9.5	73	2.785	171	6.719	20	0.781	36	1.406		22	0.875	126	4.969	76	3	55.6	2.189	22.2	0.874	M16	0.625
PX11	69.8	2.75	260	10.25	79	3.125	184	7.25	25	0.969	36	1.406		28	1.094	139	5.469	83	3.281	65.1	2.563	25.4	1	M20	0.75
PX12	76.2	3	286	11.25	83	3.25	203	8	25	0.969	40	1.563		28	1.094	152	5.969	88	3.469	65.1	2.563	25.4	1	M20	0.75
PX13	76.2	3	286	11.25	83	3.25	203	8	25	0.969	40	1.563		28	1.094	155	6.094	88	3.469	74.6	2.937	30.2	1.189	M20	0.75
PX14	88.9	3.5	330	13	89	3.5	229	9	27	1.063	50	1.969		32	1.25	171	6.719	98	3.844	77.8	3.063	33.3	1.331	M22	0.875
PX15	88.9	3.5	330	13	89	3.5	229	9	27	1.063	50	1.969		32	1.25	175	6.875	99	3.906	82.6	3.252	33.3	1.311	M22	0.875
PX16	101.6	4	381	15	102	4	283	11.125	27	1.063	58	2.281		34	1.344	195	7.688	116	4.563	85.7	3.374	34.1	1.343	M22	0.875
PX17	101.6	4	381	15	102	4	283	11.125	27	1.063	60	2.375		34	1.344	200	7.875	116	4.563	96	3.78	39.7	1.563	M22	0.875
PX18	101.6	4	381	15	111	4.375	283	11.125	27	1.063	60	2.375		38	1.5	204	8.031	116	4.563	104	4.094	42.9	1.689	M22	0.875
PX20	127	5	432	17	121	4.75	337	13.25	33	1.313	65	2.563		45	1.781	245	9.656	126	4.969	117.5	4.626	49.2	1.937	M27	1

Every effort has been taken to ensure that the data listed in this catalogue is correct.
Finer Power Transmissions P/L will not accept liability for any damage or loss caused as a result of the data in this catalogue.

Bearing Housings
FYH
Finer Power Transmissions P/L | www.finerpt.com

PX00 Series

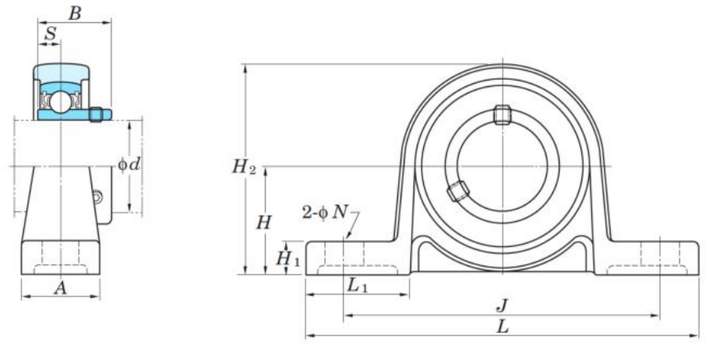

Every effort has been taken to ensure that the data listed in this catalogue is correct.
Finer Power Transmissions P/L will not accept liability for any damage or loss caused as a result of the data in this catalogue.

FYH
Finer Power Transmissions P/L | www.finerpt.com
Bearing Housings

FX00 Series

FX00 Series

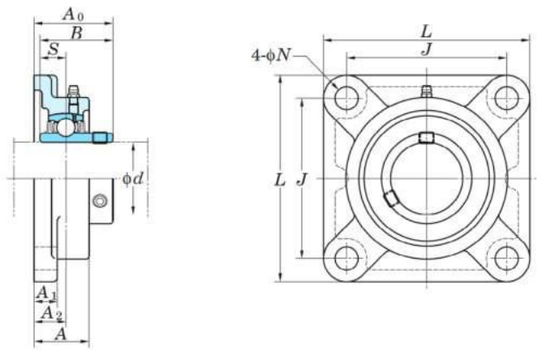

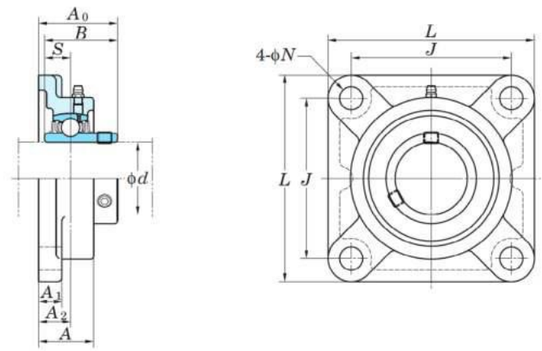

Housing Number	Dimensions									Dimensions										Bolt Size	
	L		A		J		N			A1		A2		A0		B		S			
	mm	inch	mm	inch	mm	inch	mm	inch		mm	inch	mm	inch	mm	inch	mm	inch	mm	inch	mm	inch
FX05	108	4.25	30	1.188	83	3.266	12	0.469		13	0.5	18	0.703	40.2	1.594	38.1	1.5	15.9	0.626	M10	0.375
FX06	117	4.594	34	1.344	92	3.625	16	0.625		14	0.563	19	0.75	44.4	1.75	42.9	1.689	17.5	0.689	M14	0.5
FX07	130	5.125	38	1.5	102	4.016	16	0.625		14	0.563	21	0.828	51.2	2.031	49.2	1.937	19	0.748	M14	0.5
FX08	137	5.406	40	1.563	105	4.141	19	0.75		14	0.563	22	0.859	52.2	2.063	49.2	1.937	19	0.748	M16	0.625
FX09	143	5.625	40	1.563	111	4.375	19	0.75		14	0.563	23	0.906	55.6	2.188	51.6	2.031	19	0.748	M16	0.625
FX10	162	6.375	44	1.719	130	5.125	19	0.75		20	0.781	26	1.031	59.4	2.344	55.6	2.189	22.2	0.874	M16	0.625
FX11	175	6.875	49	1.938	143	5.625	19	0.75		20	0.781	29	1.141	68.7	2.719	65.1	2.563	25.4	1	M16	0.625
FX12	187	7.375	59	2.313	149	5.859	19	0.75		21	0.813	34	1.344	73.7	2.906	65.1	2.563	25.4	1	M16	0.625
FX13	187	7.375	59	2.313	149	5.859	19	0.75		21	0.813	34	1.344	78.4	2.094	74.6	2.937	30.2	1.189	M16	0.625
FX14	197	7.75	60	2.375	152	5.985	23	0.906		22	0.875	37	1.453	81.5	3.219	77.8	3.063	33.3	1.331	M20	0.75
FX15	197	7.75	68	2.688	152	5.984	23	0.906		24	0.938	40	1.563	89.3	3.531	82.6	3.252	33.3	1.311	M20	0.75
FX16	214	8.438	70	2.75	171	6.734	23	0.906		24	0.938	40	1.563	91.6	3.594	85.7	3.374	34.1	1.343	M20	0.75
FX17	214	8.438	70	2.75	171	6.734	23	0.906		24	0.938	40	1.563	96.3	3.781	96	3.78	39.7	1.563	M20	0.75
FX18	214	8.438	76	3	171	6.734	23	0.906		24	0.938	45	1.766	106.1	4.188	104	4.094	42.9	1.689	M20	0.75
FX20	268	10.563	97	3.813	211	8.313	31	1.219		28	1.094	59	2.328	127.3	5	117.5	4.626	49.2	1.937	M27	1

BOOK 7: BEARINGS – KOYO
7.2 PREMIUM FYH BEARINGS

Every effort has been taken to ensure that the data listed in this catalogue is correct.
Finer Power Transmissions P/L will not accept liability for any damage or loss caused as a result of the data in this catalogue.
Every effort has been taken to ensure that the data listed in this catalogue is correct.
Finer Power Transmissions P/L will not accept liability for any damage or loss caused as a result of the data in this catalogue.

LF200 Series

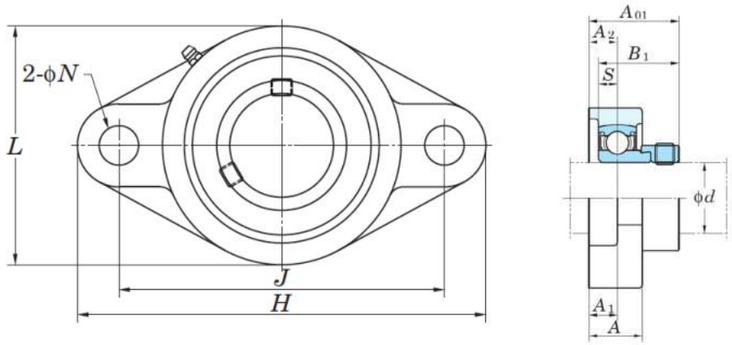

Housing Number	Dimensions																													
	H		L		A		J		N		A1			A2		S		A0		B		A01		B1		Bolt Size	
	mm	inch	mm	inch	mm	inch	mm	inch	mm	inch	mm	inch		mm	inch	mm	inch	mm	inch	mm	inch	mm	inch	mm	inch	mm	inch
LF203	81	3 3/16	52	2 1/16	18	23/32	63.5	2 1/2	8	5/16	9.5	3/8		9.5	3/8	6	21/89	25.2	1	22	0.866	32	1 1/4	28.5	1.122	M6	1/4
LF204	90	3 17/32	60	2 3/8	20	25/32	71.5	2 13/16	10	25/64	11	7/16		11	7/16	7	8/29	29	1 5/32	25	0.984	33.5	1 5/16	29.5	1.161	M8	5/16
LF205	95	3 3/4	64	2 17/32	20	25/32	76	2 63/64	10	25/64	11	7/16		11	7/16	7.5	18/61	30.5	1 3/16	27	1.063	34	1 11/32	30.5	1.201	M8	5/16
LF206	113	4 7/16	76	3	22.5	7/8	90.5	3 9/16	12	15/32	12	15/32		12	15/32	8	23/73	34	1 11/32	30	1.181	37.9	1 1/2	33.9	1.335	M10	3/8
LF207	122	4 13/16	89	3 1/2	24	15/16	100	3 15/16	12	15/32	13	1/2		13	33/64	8.5	1/3	36 1/2	1 7/16	32	1.26	41	1 5/8	36.5	1.437	M10	3/8

Every effort has been taken to ensure that the data listed in this catalogue is correct.
Finer Power Transmissions P/L will not accept liability for any damage or loss caused as a result of the data in this catalogue.

Bearing Housings
FYH
Finer Power Transmissions P/L | www.finerpt.com
LF200 Series

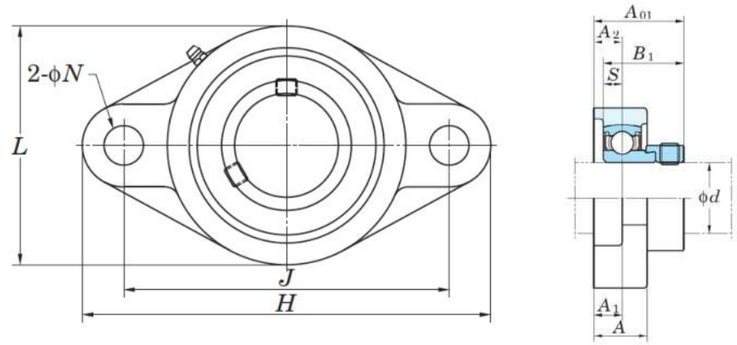

Every effort has been taken to ensure that the data listed in this catalogue is correct.
Finer Power Transmissions P/L will not accept liability for any damage or loss caused as a result of the data in this catalogue.

FYH
Finer Power Transmissions P/L | www.finerpt.com
Bearing Housings

FL200 Series

FL200 Series

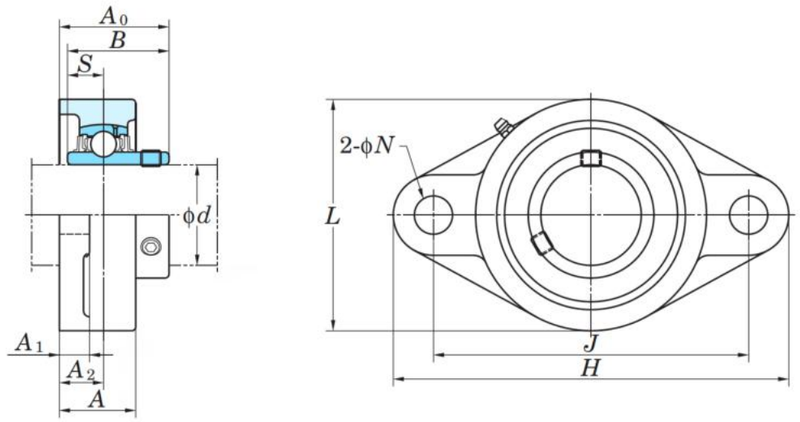

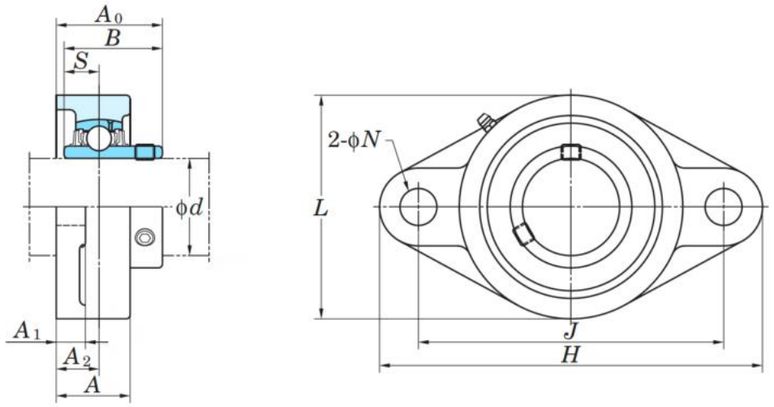

Housing Number	Dimensions											Dimensions										Bolt Size	
	H		L		A		J		N			A1		A2		A0		B		S			
	mm	inch	mm	inch	mm	inch	mm	inch	mm	inch		mm	inch	mm	inch	mm	inch	mm	inch	mm	inch	mm	inch
FL203	113	4.438	60	2.375	25.5	1	90	3.567	12	0.459		11	0.438	15	0.594	33.3	1.313	31	1.22	12.7	0.5	M10	0.375
FL204	113	4.438	60	2.375	25.5	1	90	3.567	12	0.459		11	0.438	15	0.594	33.3	1.313	31	1.22	12.7	0.5	M10	0.375
FL205	130	5.125	68	2.688	27	1.063	99	3.891	16	0.625		13	0.5	16	0.625	35.8	1.406	34.1	1.343	14.3	0.563	M14	0.5
FL206	148	5.813	80	3.156	31	1.219	117	4.609	16	0.625		13	0.5	18	0.703	40.2	1.594	38.1	1.5	15.9	0.626	M14	0.5
FL207	161	6.344	90	3.531	34	1.344	130	5.125	16	0.625		14	0.563	19	0.75	44.4	1.75	42.9	1.689	17.5	0.689	M14	0.5
FL208	175	6.875	100	3.938	36	1.406	144	5.672	16	0.625		14	0.563	21	0.828	51.2	2.031	49.2	1.937	19	0.748	M14	0.5
FL209	188	7.406	108	4.25	38	1.5	148	5.828	19	0.75		15	0.594	22	0.859	52.2	2.063	49.2	1.937	19	0.748	M16	0.625
FL210	197	7.75	115	4.531	40	1.563	157	6.188	19	0.75		15	0.594	22	0.859	54.6	2.156	51.6	2.031	19	0.748	M16	0.625
FL211	224	8.813	130	5.125	43	1.688	184	7.25	19	0.75		18	0.719	25	0.984	58.4	2.313	55.6	2.189	22.2	0.874	M16	0.625
FL212	250	9.844	140	5.5	48	1.875	202	7.953	23	0.906		18	0.719	29	1.141	68.7	2.719	65.1	2.563	25.4	1	M20	0.75
FL213	258	10.156	155	6.094	50	1.969	210	8.266	23	0.906		20	0.781	30	1.188	69.7	2.75	65.1	2.563	25.4	1	M20	0.75
FL214	265	10.438	160	6.313	54	2.125	216	8.5	23	0.906		20	0.781	31	1.219	75.4	2.969	74.6	2.937	30.2	1.189	M20	0.75
FL215	275	10.813	165	6.5	56	2.219	225	8.859	23	0.906		20	0.781	34	1.344	78.5	3.094	77.8	3.063	33.3	1.311	M20	0.75
FL216	290	11.406	180	7.094	58	2.281	233	9.172	25	0.984		20	0.781	34	1.344	83.3	3.281	82.6	3.252	33.3	1.311	M22	0.875
FL217	305	12	190	7.469	63	2.469	248	9.766	25	0.984		22	0.875	36	1.422	87.6	3.438	85.7	3.374	34.1	1.343	M22	0.875
FL218	320	12.594	205	8.063	68	2.688	265	10.438	25	0.984		23	0.906	40	1.578	96.3	3.781	96	3.78	39.7	1.563	M22	0.875

BOOK 7. BEARINGS – KOYO
7.2 PREMIUM FYH BEARINGS

Every effort has been taken to ensure that the data listed in this catalogue is correct.
Finer Power Transmissions P/L will not accept liability for any damage or loss caused as a result of the data in this catalogue.
Every effort has been taken to ensure that the data listed in this catalogue is correct.
Finer Power Transmissions P/L will not accept liability for any damage or loss caused as a result of the data in this catalogue.

FYH
Finer Power Transmissions P/L | www.finerpt.com
Bearing Housings

FL300 Series

FL300 Series

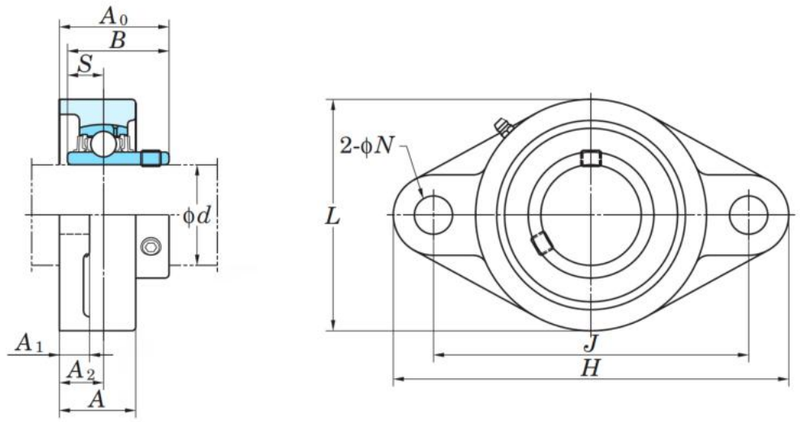

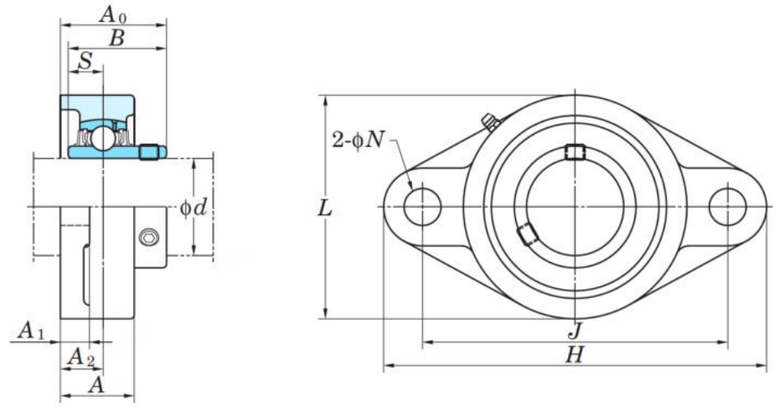

Housing Number	Dimensions											Dimensions										Bolt Size	
	H		L		A		J		N			A1		A2		A0		B		S			
	mm	inch	mm	inch	mm	inch	mm	inch	mm	inch		mm	inch	mm	inch	mm	inch	mm	inch	mm	inch	mm	inch
FL305	150	5 29/32	80	3. 5/32	29	1 5/32	113	4 29/64	19	3/4		13	1/2	16	5/8	39	1 17/32	38	1.496	15	0.591	M16	5/8
FL306	180	7 3/32	90	3 17/32	32	1 1/4	134	5 9/32	23	29/32		15	19/32	18	45/64	44	1 23/32	43	1.693	17	0.669	M20	3/4
FL307	185	7 9/32	100	3 15/16	36	1 13/32	141	5 35/64	23	29/32		16	5/8	20	25/32	49	1 15/16	48	1.89	19	0.748	M20	3/4
FL308	200	7 7/8	112	4 13/32	40	1 9/16	158	6 7/32	23	29/32		17	21/32	23	29/32	56	2 7/32	52	2.047	19	0.748	M20	3/4
FL309	230	9 1/16	125	4 29/32	44	1 23/32	177	6 31/32	25	63/64		18	23/32	25	63/64	60	2 3/8	57	2.244	22	0.866	M22	7/8
FL310	240	9 7/16	140	5 1/2	48	1 7/8	187	7 23/64	25	63/64		19	3/4	28	1 7/64	67	2 5/8	61	2.402	22	0.866	M22	7/8
FL311	250	27/32	150	5 29/32	52	2 1/16	198	7 51/64	25	63/64		20	25/32	30	1 3/16	71	2 25/32	66	2.598	25	0.984	M22	7/8
FL312	270	10 5/8	160	6 5/16	56	2 7/32	212	8 11/32	31	1 7/32		22	7/8	33	1 19/64	78	3 1/16	71	2.795	26	1.024	M27	1
FL313	295	11 5/8	175	6 7/8	58	2 9/32	240	9 29/64	31	1 7/32		25	31/32	33	1 19/64	78	3 1/16	75	2.953	30	1.181	M27	1
FL314	315	12 13/32	185	7 9/32	61	2 13/32	250	9 27/32	35	1 3/8		28	1 3/32	36	1 27/64	81	3 3/16	78	3.071	33	1.299	M30	1 1/8
FL315	320	12 19/32	195	7 11/16	66	2 19/32	260	10 15/64	35	1 3/8		30	1 3/16	39	1 17/32	89	3 1/2	82	3.228	32	1.26	M30	1 1/8
FL316	335	13 31/32	210	8 9/32	68	2 11/16	285	11 7/32	38	1 1/2		32	1 1/4	38	1 1/2	90	3 17/32	86	3.386	43	1.33	M33	1 1/4
FL317	370	14 9/16	220	8 21/32	74	2 29/32	300	11 13/16	38	1 1/2		32	1 1/4	44	1 47/64	100	3 15/16	96	3.78	40	1.575	M33	1 1/4
FL318	385	15 5/32	235	9 1/4	76	3	315	12 13/32	38	1 1/2		36	1 13/32	44	1 47/64	100	3 15/16	96	3.78	40	1.575	M33	1 1/4
FL320	440	17 5/16	270	10 5/8	94	3 11/16	360	14 11/64	44	1 47/64		40	1 9/16	59	2 21/64	125	4 29/32	108	4.252	42	1.654	M39	1 1/2
FL322	470	18 1/2	300	11 13/16	96	3 25/32	390	15 23/64	44	1 47/64		42	1 21/32	60	2 23/64	131	5 5/32	117	4.606	46	1.811	M39	1 1/2
FL324	520	20 15/32	330	13	110	4 11/32	430	16 59/64	47	1 27/32		48	1 7/8	65	2 9/16	140	5 1/2	126	4.961	51	2.008	M42	1 5/8

BOOK 7. BEARINGS – KOYO
7.2 PREMIUM FYH BEARINGS

Every effort has been taken to ensure that the data listed in this catalogue is correct.
Finer Power Transmissions P/L will not accept liability for any damage or loss caused as a result of the data in this catalogue.
Every effort has been taken to ensure that the data listed in this catalogue is correct.
Finer Power Transmissions P/L will not accept liability for any damage or loss caused as a result of the data in this catalogue.

FB200 Series

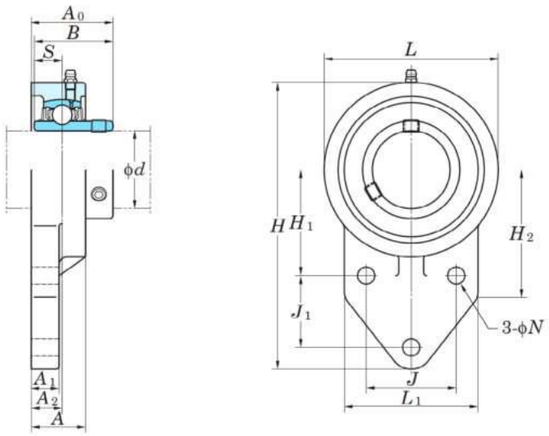

Bearing Housings
Finer Power Transmissions P/L | www.finerpt.com
FB200 Series

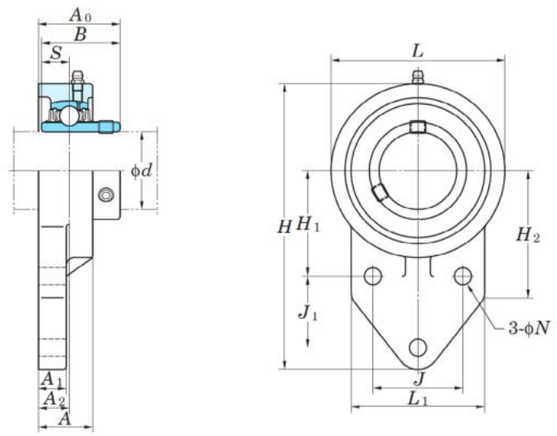

Housing Number	Dimensions															Dimensions														Bolt Size	
	H		L		A		J		J1		N		H1			H2		L1		A1		A2		A0		B		S			
	mm	inch	mm	inch	mm	inch	mm	inch	mm	inch	mm	inch	mm	inch		mm	inch	mm	inch	mm	inch	mm	inch	mm	inch	mm	inch	mm	inch	mm	inch
FB204	110	4.344	62	2.438	24.5	0.938	32	1.266	27	1.063	9.5	0.375	42	1.656		52	2.063	52	2.063	13	0.5	13.5	0.531	31.8	1.25	31	1.22	12.7	0.5	M8	0.313
FB205	116	4.563	68	2.688	27	1.063	34	1.344	27	1.063	9.5	0.375	45	1.766		52	2.063	56	2.219	13	0.5	15	0.594	34.8	1.375	34.1	1.343	14.3	0.563	M8	0.313
FB206	130	5.125	78	3.063	30	1.188	40	1.578	29	1.141	9.5	0.375	50	1.969		55	2.156	65	2.563	13	0.5	17	0.672	39.2	1.531	38.1	1.5	15.9	0.626	M8	0.313
FB207	144	5.656	90	3.531	33.5	1.313	46	1.813	32	1.266	9.5	0.375	55	2.172		62	2.438	70	2.75	15	0.594	19	0.75	44.4	1.75	42.9	1.689	17.5	0.689	M8	0.313
FB208	164	6.469	100	3.938	35	1.75	50	1.969	41	1.609	11	0.438	60	2.359		72	2.844	78	3.063	16	0.625	20	0.781	50.2	1.969	49.2	1.937	19	0.748	M10	0.375
FB209	174	6.844	106	4.188	35.5	1.375	54	2.125	43	1.688	11	0.438	65	2.563		76	3	80	3.156	18	0.719	20	0.781	50.2	1.969	49.2	1.937	19	0.748	M10	0.375
FB210	184	7.25	112	4.406	36	1.438	58	2.281	46	1.813	11	0.438	68	2.672		82	3.219	86	3.375	18	0.719	20	0.781	52.6	2.063	51.6	2.031	19	0.748	M10	0.375

Every effort has been taken to ensure that the data listed in this catalogue is correct.
Finer Power Transmissions P/L will not accept liability for any damage or loss caused as a result of the data in this catalogue.

Every effort has been taken to ensure that the data listed in this catalogue is correct.
Finer Power Transmissions P/L will not accept liability for any damage or loss caused as a result of the data in this catalogue.

P000 Silver Series

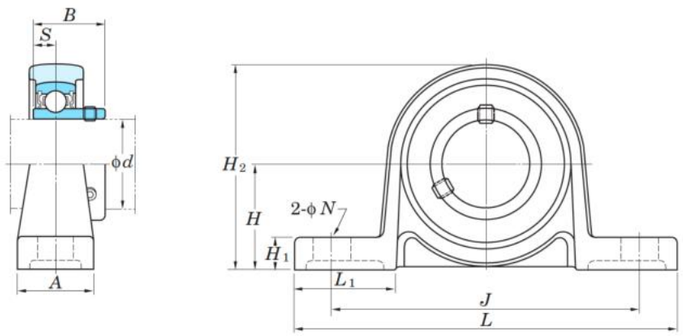

Bearing Housings
Finer Power Transmissions P/L | www.finerpt.com
P000 Silver Series

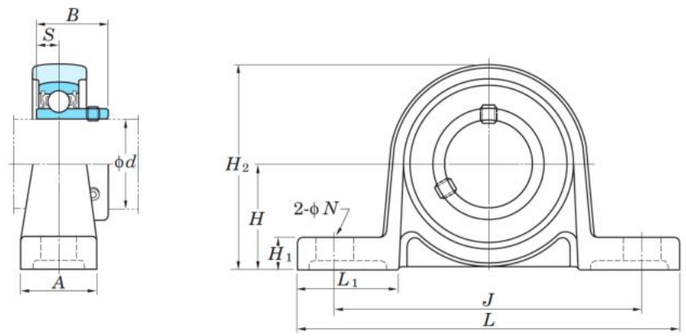

Housing Number	Dimensions																						Bolt Size	
	H		L		A		J		N			H1		H2		L1		B		S				
	mm	inch	mm	inch	mm	inch	mm	inch	mm	inch		mm	inch	mm	inch	mm	inch	mm	inch	mm	inch		mm	inch
P000	18	0.703	67	2.625	16	0.625	53	2.094	7	0.281		6	0.25	35	1.375	18	0.719	15	0.591	5	0.197		M6	0.25
P001	19	0.75	71	2.781	16	0.625	56	2.203	7	0.281		6	0.25	38	1.5	19	0.75	15	0.591	5	0.197		M6	0.25
P002	22	0.859	80	3.156	16	0.625	63	2.484	7	0.281		7	0.281	43	1.688	21	0.813	16.5	0.65	5.5	0.217		M6	0.25
P003	24	0.938	85	3.344	18	0.719	67	2.641	7	0.281		7	0.281	47	1.844	21	0.813	17.5	0.689	6	0.236		M6	0.25
P004	28	1.109	100	3.938	20	0.781	80	3.156	10	0.406		9	0.344	55	2.156	25	0.969	21	0.827	7	0.276		M8	0.625
P005	32	1.266	112	4.406	20	0.781	90	3.547	10	0.406		10	0.406	62	2.438	28	1.094	22	0.866	7	0.276		M8	0.625
P006	36	1.422	132	5.188	26	1.031	106	4.172	13	0.5		11	0.438	70	2.75	34	1.344	24.5	0.965	7.5	0.295		M10	0.375

Every effort has been taken to ensure that the data listed in this catalogue is correct.
Finer Power Transmissions P/L will not accept liability for any damage or loss caused as a result of the data in this catalogue.

Every effort has been taken to ensure that the data listed in this catalogue is correct.
Finer Power Transmissions P/L will not accept liability for any damage or loss caused as a result of the data in this catalogue.

FL000 Silver Series

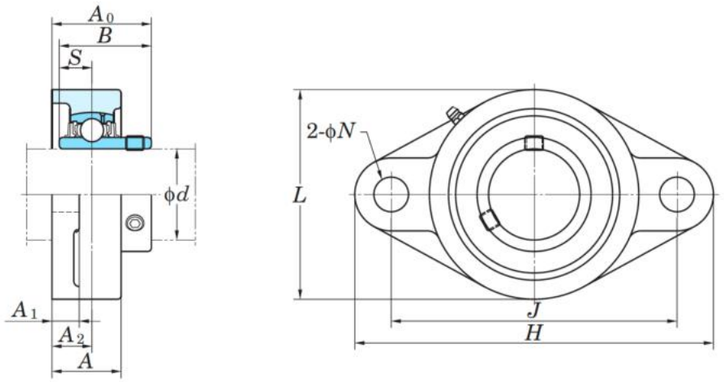

Housing Number	Dimensions											Dimensions										Bolt Size	
	H		L		A		J		N			A1		A2		A0		B		S			
	mm	inch	mm	inch	mm	inch	mm	inch	mm	inch		mm	inch	mm	inch	mm	inch	mm	inch	mm	inch	mm	inch
FL000	60	2.375	36	1.406	12	0.469	45	1.766	7	0.281		6	0.25	6	0.234	16	0.625	15	0.591	5	0.197	M6	0.25
FL001	63	2.469	38	1.5	12	0.469	48	1.891	7	0.281		6	0.25	6	0.234	16	0.625	15	0.591	2	0.197	M6	0.25
FL002	67	2.625	42	1.656	13	0.5	53	2.094	7	0.281		6.5	0.25	6.5	0.25	17.5	0.688	16.5	0.65	5.5	0.217	M6	0.25
FL003	71	2.781	46	1.813	14	0.563	56	2.203	7	0.281		7	0.281	7	0.281	18.5	0.719	17.5	0.689	6	0.236	M6	0.25
FL004	90	3.531	55	2.156	16	0.625	71	2.797	10	0.406		8	0.313	8	0.313	22	0.875	21	0.827	7	0.276	M8	0.313
FL005	95	3.75	60	2.375	16	0.625	75	2.953	10	0.406		8	0.313	8	0.313	23	0.906	22	0.866	7	0.276	M8	0.313
FL006	112	4.406	70	2.75	18	0.719	85	3.344	13	0.5		9	0.344	9	0.344	26	1.031	24.5	0.965	7.5	0.295	M10	0.375

Every effort has been taken to ensure that the data listed in this catalogue is correct.
Finer Power Transmissions P/L will not accept liability for any damage or loss caused as a result of the data in this catalogue.

Bearing Housings
FYH
Finer Power Transmissions P/L | www.finerpt.com
FL000 Silver Series

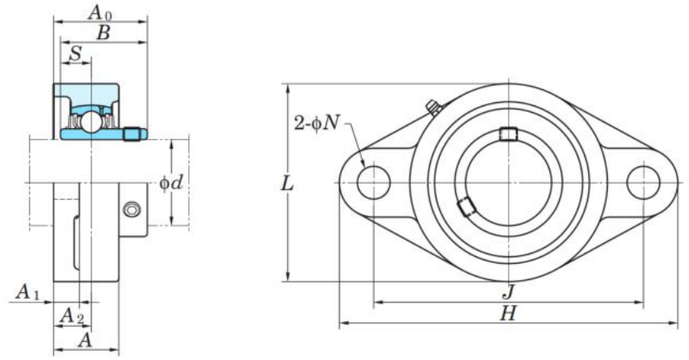

Every effort has been taken to ensure that the data listed in this catalogue is correct.
Finer Power Transmissions P/L will not accept liability for any damage or loss caused as a result of the data in this catalogue.

FYH
Finer Power Transmissions P/L | www.finerpt.com
Bearing Housings

FC200 Series

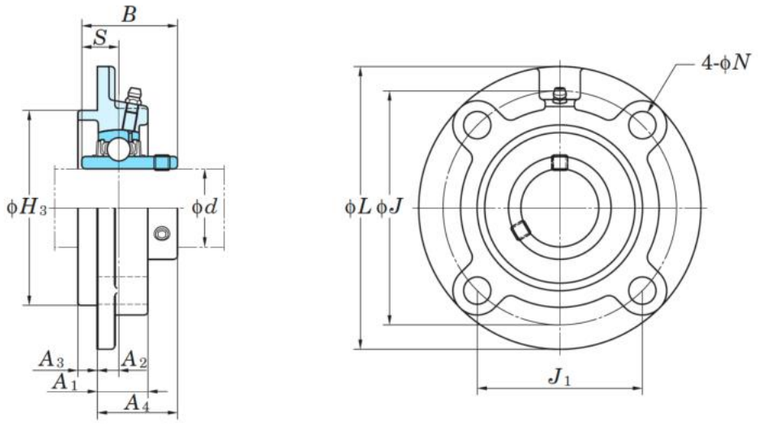

FC200 Series

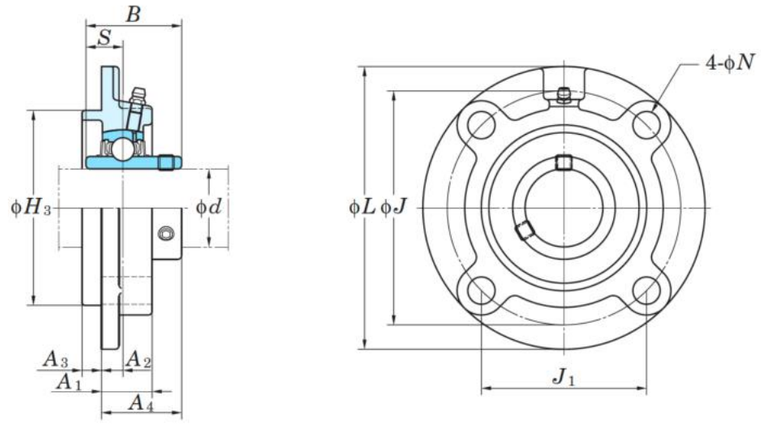

Housing Number	Dimensions																								Bolt Size	
	L		H3		J		J1		N			A1		A2		A3		A4		B		S				
	mm	inch	mm	inch	mm	inch	mm	inch	mm	inch		mm	inch	mm	inch	mm	inch	mm	inch	mm	inch	mm	inch		mm	inch
FC204	100	3.953	62	2.441	78	3.078	55.1	2.688	12	0.469		20.5	0.813	10	0.391	5	0.203	28.3	1.125	31	1.22	12.7	0.5		M10	0.375
FC205	115	4.531	70	2.756	90	3.547	63.6	2.5	12	0.469		21	0.813	10	0.391	6	0.234	29.8	1.188	34.1	1.343	14.3	0.563		M10	0.375
FC206	125	4.906	80	3.150	100	3.938	70.7	2.781	12	0.469		23	0.906	10	0.391	8	0.313	32.2	1.281	38.1	1.5	15.9	0.626		M10	0.375
FC207	135	5.313	90	3.543	110	4.328	77.8	3.063	14	0.547		26	1.031	11	0.438	8	0.313	36.4	1.438	42.9	1.689	17.5	0.689		M12	0.438
FC208	145	5.719	100	3.937	120	4.719	84.8	3.344	14	0.547		26	1.031	11	0.438	10	0.391	41.2	1.625	49.2	1.937	19	0.748		M12	0.438
FC209	160	6.313	105	4.134	132	5.203	93.3	3.672	16	0.625		26	1.031	10	0.391	12	0.469	40.2	1.594	49.2	1.937	19	0.748		M14	0.5
FC210	165	6.5	110	4.331	138	5.438	97.6	3.844	16	0.625		28	1.094	10	0.391	12	0.469	42.6	1.688	51.6	2.031	19	0.748		M14	0.5
FC211	185	7.281	125	4.921	150	5.906	106.1	4.172	19	0.75		31	1.219	13	0.516	12	0.469	46.4	1.813	55.6	2.189	22.2	0.874		M16	0.625
FC212	195	7.688	135	5.315	160	6.297	113.1	4.453	19	0.75		36	1.406	17	0.672	12	0.469	56.7	2.219	65.1	2.563	25.4	1		M16	0.625
FC213	205	8.063	145	5.709	170	6.688	120.2	4.734	19	0.75		36	1.406	16	0.625	14	0.547	55.7	2.188	65.1	2.563	25.4	1		M16	0.625
FC214	215	8.469	150	5.906	177	6.969	125.1	4.922	19	0.75		40	1.563	17	0.672	14	0.547	61.4	2.406	74.6	2.937	30.2	1.189		M16	0.625
FC215	220	8.656	160	6.299	184	7.25	130.1	5.125	19	0.75		40	1.563	18	0.703	16	0.625	62.5	2.469	77.8	3.063	33.3	1.331		M16	0.625
FC216	240	9.438	170	6.693	200	7.875	141.4	5.563	23	0.906		42	1.969	18	0.703	16	0.625	67.3	2.656	82.6	3.252	33.3	1.311		M20	0.75
FC217	250	9.844	180	7.087	208	8.188	147.1	5.797	23	0.906		45	1.781	18	0.703	18	0.703	69.6	2.75	85.7	3.374	34.1	1.343		M20	0.75
FC218	265	10.438	190	7.480	220	8.656	155.5	6.125	23	0.906		50	1.969	22	0.859	18	0.703	78.3	3.094	96	3.78	39.7	1.563		M20	0.75

BOOK 7: BEARINGS – KOYO
7.2 PREMIUM FYH BEARINGS

Every effort has been taken to ensure that the data listed in this catalogue is correct.
Finer Power Transmissions P/L will not accept liability for any damage or loss caused as a result of the data in this catalogue.
Every effort has been taken to ensure that the data listed in this catalogue is correct.
Finer Power Transmissions P/L will not accept liability for any damage or loss caused as a result of the data in this catalogue.

FYH
Finer Power Transmissions P/L | www.finerpt.com
Bearing Housings

FCX00 Series

FCX00 Series

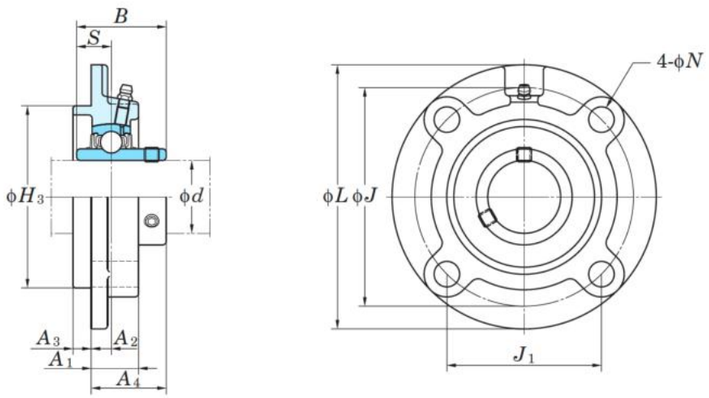

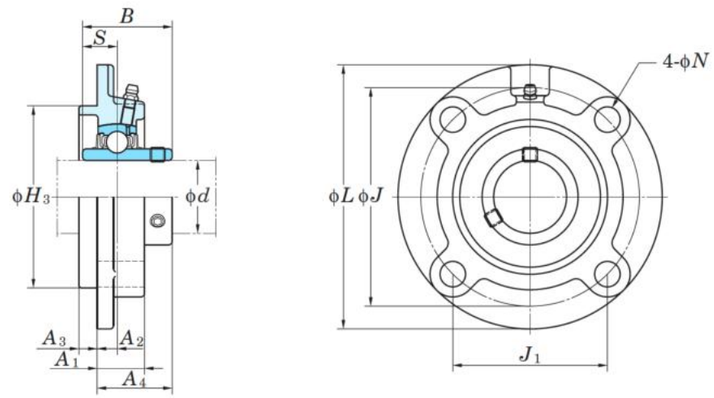

Housing Number	Dimensions											Dimensions												Bolt Size	
	L		H3		J		J1		N			A1		A2		A3		A4		B		S			
	mm	inch	mm	inch	mm	inch	mm	inch	mm	inch		mm	inch	mm	inch	mm	inch	mm	inch	mm	inch	mm	inch	mm	inch
FCX05	111	4.375	76	2.992	92	3.625	65	2.563	9.5	0.375		24	0.938	10	0.391	6	0.234	32.2	1.281	38.1	1.5	15.9	0.626	M8	0.313
FCX06	127	5	85	3.347	105	4.141	74.2	2.922	12	0.469		22.5	0.875	8	0.313	9.5	0.375	33.4	1.313	42.9	1.689	17.5	0.689	M10	0.375
FCX07	133	5.25	92	3.622	111	4.375	78.5	3.094	12	0.469		26	1.031	9	0.359	11	0.438	39.2	1.531	49.2	1.937	19	0.748	M10	0.375
FCX08	133	5.25	92	3.622	111	4.375	78.5	3.094	12	0.496		26	1.031	9	0.359	11	0.438	39.2	1.531	49.2	1.937	19	0.748	M10	0.375
FCX09	155	6.094	108	4.252	130	5.125	91.9	3.625	14	0.547		25	0.969	8	0.313	12	0.469	40.6	1.594	51.6	2.031	19	0.748	M12	0.438
FCX10	162	6.375	118	4.646	136	5.359	96.2	3.781	14	0.547		25	0.969	7	0.281	16	0.625	40.4	1.594	55.6	2.189	22.2	0.874	M12	0.438
FCX11	180	7.094	127	5	152	5.969	107.5	4.234	16	0.625		26	1.031	4	0.156	22	0.859	43.7	1.719	65.1	2.563	25.4	1	M14	0.5
FCX12	194	7.625	140	5.512	165	6.5	116.7	4.594	16	0.625		33	1.313	11	0.438	20	0.781	50.7	2	65.1	2.563	25.4	1	M14	0.5
FCX13	194	7.625	140	5.512	165	6.5	116.7	4.594	16	0.625		33	1.313	11	0.438	20	0.781	55.4	2.188	74.6	2.937	30.2	1.189	M14	0.5
FCX14	222	8.75	164	6.457	190	7.484	134.3	5.281	19	0.75		36	1.406	14	0.547	20	0.781	58.5	2.313	77.8	3.063	33.3	1.331	M16	0.625
FCX15	222	8.75	164	6.457	190	7.484	134.3	5.281	19	0.75		35	1.375	12	0.469	22	0.859	61.3	2.406	82.6	3.252	33.3	1.311	M16	0.625
FCX16	260	10.25	186	7.323	219	8.625	154.8	6.094	23	0.906		36	1.406	10	0.391	25	0.984	61.6	2.438	85.7	3.374	34.1	1.343	M20	0.75
FCX17	260	10.25	186	7.323	219	8.625	154.8	6.094	23	0.906		36	1.406	10	0.391	25	0.984	66.3	2.625	96	3.78	39.7	1.563	M20	0.75
FCX18	260	10.25	186	7.323	219	8.625	154.8	6.094	23	0.906		43	1.688	12	4.69	28	1.109	73.1	2.875	104	4.094	42.9	1.689	M20	0.75
FCX20	276	1.875	206	8.110	238	9.375	168.3	6.625	23	0.906		66	2.594	22	0.859	28	1.109	90.3	3.563	117.5	4.626	49.2	1.689	M20	0.75

BOOK 7. BEARINGS – KOYO
7.2 PREMIUM FYH BEARINGS

Every effort has been taken to ensure that the data listed in this catalogue is correct.
Finer Power Transmissions P/L will not accept liability for any damage or loss caused as a result of the data in this catalogue.
Every effort has been taken to ensure that the data listed in this catalogue is correct.
Finer Power Transmissions P/L will not accept liability for any damage or loss caused as a result of the data in this catalogue.

FYH
Finer Power Transmissions P/L | www.finerpt.com
Bearing Housings

T200 Series

T200 Series

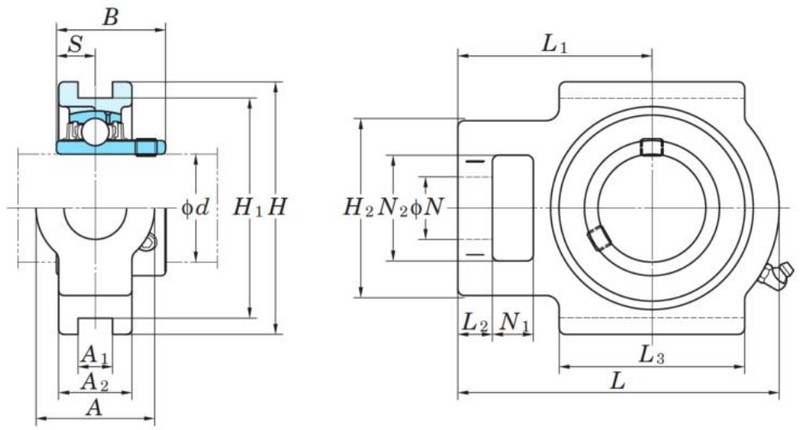

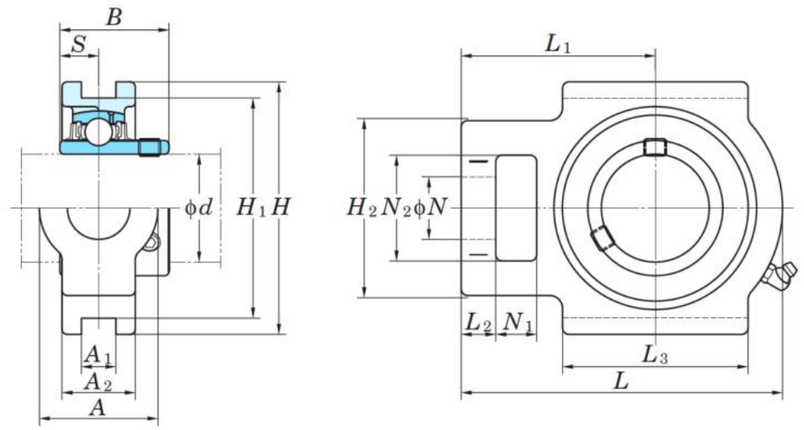

Housing Number	Dimensions															Dimensions															
	A		A1		A2		H		H1		H2		L			L1		L2		L3		N		N1		N2		B		S	
	mm	inch	mm	inch	mm	inch	mm	inch	mm	inch	mm	inch	mm	inch		mm	inch	mm	inch	mm	inch	mm	inch	mm	inch	mm	inch	mm	inch	mm	inch
T204	32	1.25	12	0.469	21	0.813	89	3.5	76	2.984	51	2	94	3.688		61	2.406	10	0.406	51	2	19	0.75	16	0.625	32	1.25	31	1.22	12.7	0.5
T205	32	1.25	12	0.469	24	0.938	89	3.5	76	2.984	51	2	97	3.813		62	2.438	10	0.406	51	2	19	0.75	16	0.625	32	1.25	34.1	1.343	14.3	0.563
T206	37	1.469	12	0.469	28	1.094	102	4.031	89	3.5	56	2.219	113	4.438		70	2.75	10	0.406	57	2.25	22	0.875	16	0.625	37	1.469	38.1	1.5	15.9	0.626
T207	37	1.469	12	0.469	30	1.188	102	4.031	89	3.5	64	2.531	129	5.094		78	3.063	13	0.5	64	2.531	22	0.875	16	0.625	37	1.469	42.9	1.689	17.5	0.689
T208	49	1.938	16	0.625	33	1.313	114	4.5	102	4.016	83	3.281	144	5.656		88	3.469	16	0.625	83	3.281	29	1.156	19	0.75	49	1.938	49.2	1.937	19	0.748
T209	49	1.938	16	0.625	35	1.375	117	4.594	102	4.016	83	3.281	144	5.656		87	3.438	16	0.625	83	3.281	29	1.156	19	0.75	49	1.938	49.2	1.937	19	0.748
T210	49	1.938	16	0.625	37	1.469	117	5.594	102	4.016	83	3.281	149	5.875		90	3.531	16	0.625	86	3.375	29	1.156	19	0.75	49	1.938	51.6	2.031	19	0.748
T211	64	2.531	22	0.859	38	1.5	146	5.75	130	5.125	102	4.031	171	6.719		106	4.188	19	0.75	95	3.75	35	1.375	25	0.969	64	2.531	55.6	2.189	22.2	0.874
T212	64	2.253	22	0.859	42	1.656	146	5.75	130	5.125	102	4.031	194	7.625		119	4.688	19	0.75	102	4.031	35	1.375	32	1.25	64	2.531	65.1	2.563	25.4	1
T213	70	2.75	26	1.031	44	1.719	167	6.563	151	5.938	111	4.375	224	8.813		137	5.406	21	0.813	121	4.75	41	1.625	32	1.25	70	2.75	65.1	2.563	25.4	1
T214	70	2.75	26	1.031	46	1.813	167	6.563	151	5.938	111	4.375	224	8.813		137	5.406	21	0.813	121	4.75	41	1.625	32	1.25	70	2.75	74.6	2.937	30.2	1.189
T215	70	2.75	26	1.031	48	1.875	167	6.563	151	5.938	111	4.375	232	9.125		140	5.5	21	0.813	121	4.75	41	1.625	32	1.25	70	2.75	77.8	3.063	33.3	1.331

BOOK 7: BEARINGS – KOYO
7.2 PREMIUM FYH BEARINGS

Every effort has been taken to ensure that the data listed in this catalogue is correct.
Finer Power Transmissions P/L will not accept liability for any damage or loss caused as a result of the data in this catalogue.
Every effort has been taken to ensure that the data listed in this catalogue is correct.
Finer Power Transmissions P/L will not accept liability for any damage or loss caused as a result of the data in this catalogue.

FYH
Finer Power Transmissions P/L | www.finerpt.com
Bearing Housings

T300 Series

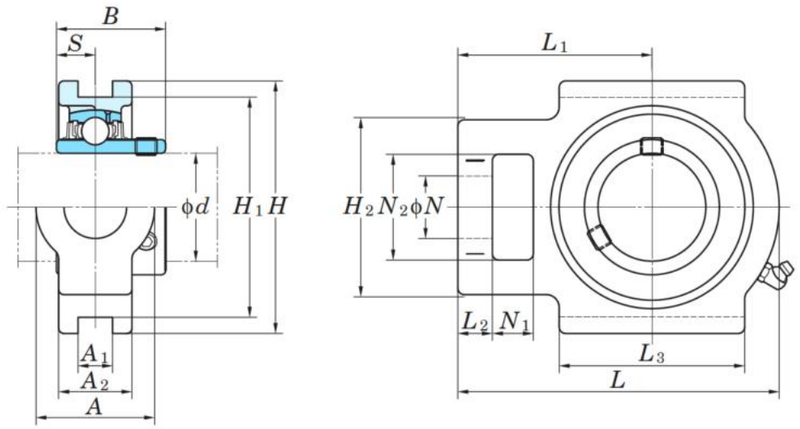

T300 Series

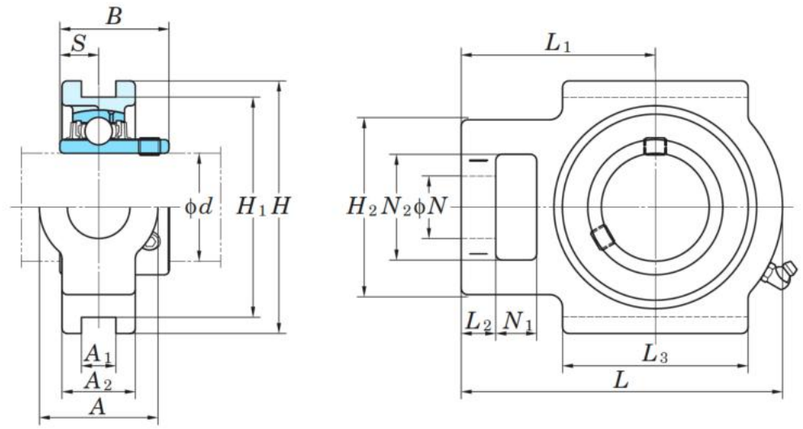

Housing Number	Dimensions															Dimensions															
	A		A1		A2		H		H1		H2		L			L1		L2		L3		N		N1		N2		B		S	
	mm	inch	mm	inch	mm	inch	mm	inch	mm	inch	mm	inch	mm	inch		mm	inch	mm	inch	mm	inch	mm	inch	mm	inch	mm	inch	mm	inch	mm	inch
T305	36	1 13/32	12	15/32	26	1 1/32	89	3 1/2	80	3 5/32	62	2 7/16	122	4 13/16		76	3	12	15/32	65	2 9/16	26	1 1/32	16	5/8	36	1 13/32	38	1.496	15	0.591
T306	41	1 5/8	16	5/8	28	1 3/32	100	3 15/16	90	3 35/64	70	2 3/4	137	5 13/32		85	3 11/32	14	9/16	74	2 29/32	28	1 3/32	18	23/32	41	1 5/8	43	1.693	17	0.669
T307	45	1 25/32	16	5/8	32	1 1/4	111	4 3/8	100	3 15/16	75	2 15/16	150	5 29/32		94	3 11/16	15	19/32	80	3 5/32	30	1 3/16	20	25/32	45	1 25/32	48	1.89	19	0.748
T308	50	1 31/32	18	45/64	34	1 11/32	124	4 7/8	112	4 13/32	83	3 9/32	162	6 3/8		100	3 15/16	17	21/32	89	3 1/2	32	1 1/4	22	7/8	50	1 31/32	52	2.047	19	0.748
T309	55	2 5/32	18	45/64	38	1 1/2	138	5 7/16	125	4 59/64	90	3 17/32	178	7		110	4 11/32	18	23/32	97	3 13/16	34	1 11/32	24	15/16	55	2 5/32	57	2.244	22	0.866
T310	61	2 13/32	20	25/32	40	1 9/16	151	5 15/16	140	5 33/64	98	3 27/32	191	7 17/32		117	4 19/32	20	25/32	106	4 3/16	37	1 15/32	27	1 1/16	61	2 13/32	61	2.402	22	0.866
T311	66	2 19/32	22	55/64	44	1 23/32	163	6 13/32	150	5 29/32	105	4 1/8	207	8 5/32		127	5	21	13/16	115	4 17/32	39	1 17/32	29	1 5/32	66	2 19/32	66	2.598	25	0.984
T312	71	2 25/32	22	55/64	46	1 13/16	178	7	160	6 19/64	113	4 7/16	220	8 21/32		135	5 5/16	23	29/32	123	4 27/32	41	1 5/8	31	1 7/32	71	2 25/32	71	2.795	26	1.024
T313	80	3 5/32	26	1 1/32	50	1 31/32	190	7 15/32	170	6 11/16	116	4 9/16	238	9 3/8		146	5 3/4	25	31/32	134	5 9/32	43	1 11/16	32	1 1/4	70	2 3/4	75	2.953	30	1.181
T314	90	3 17/32	26	1 1/32	52	2 1/16	202	7 15/16	180	7 3/32	130	5 1/8	252	9 29/32		155	6 3/32	25	31/32	140	5 1/2	46	1 13/16	36	1 13/32	85	3 11/32	78	3.071	33	1.299
T315	90	3 17/32	26	1 1/32	55	2 5/32	216	8 1/2	192	7 9/16	132	5 3/16	262	10 5/16		160	6 5/16	25	31/32	150	5 29/32	46	1 13/16	36	1 13/32	85	3 11/32	82	3.228	32	1.26
T316	102	4 1/32	30	1 3/16	60	2 3/8	230	9 1/16	204	8 1/32	150	5 29/32	282	11 3/32		174	6 27/32	28	1 3/32	160	6 5/16	53	2 3/32	42	1 21/32	98	3 27/32	86	3.386	34	1.339
T317	102	4 1/32	32	1 17/64	64	2 17/32	240	9 7/16	214	8 27/64	152	5 31/32	298	11 23/32		183	7 7/32	30	1 3/16	170	6 11/16	53	2 3/32	42	1 21/32	98	3 27/32	96	3.78	40	1.575
T318	110	4 11/32	32	1 17/64	66	2 19/32	255	10 1/32	228	8 31/32	160	6 5/16	312	12 9/32		192	7 9/16	30	1 3/16	175	6 7/8	57	2 1/4	46	1 13/16	106	4 3/16	96	3.78	40	1.575
T320	120	4 23/32	35	1 3/8	75	2 15/16	290	11 13/32	260	10 15/64	175	6 7/8	345	13 19/32		210	8 9/32	32	1 1/4	200	7 7/8	59	2 5/16	48	1 7/8	115	4 17/32	108	4.252	42	1.654
T322	130	5 1/8	38	1 1/2	80	3 5/32	320	12 19/32	285	11 7/32	185	7 9/32	385	15 5/32		235	9 1/4	38	1 1/2	215	8 15/32	65	2 9/16	52	2 1/16	125	4 29/32	117	4.606	46	1.811
T324	140	5 1/2	45	1 49/64	90	3 17/32	355	13 31/32	320	12 9/32	210	8 9/32	432	17		267	10 1/2	42	1 21/32	230	9 1/16	70	2 3/4	60	2 3/8	140	5 1/2	126	4.961	51	2.008
T326	150	5 29/32	50	1 31/32	100	3 15/16	385	15 5/32	350	13 25/32	220	8 21/32	465	18 5/16		285	11 7/32	45	1 25/32	240	9 7/16	75	2 15/16	65	2 9/16	150	5 29/32	135	5.315	54	2.126
T328	155	6 3/32	50	1 31/32	100	3 15/16	415	16 11/32	380	14 1/4	230	9 1/16	515	20 9/32		315	12 13/32	50	1 31/32	255	10 1/32	80	3 5/32	70	2 3/4	160	6 5/16	145	5.709	59	2.323

Every effort has been taken to ensure that the data listed in this catalogue is correct.
Finer Power Transmissions P/L will not accept liability for any damage or loss caused as a result of the data in this catalogue.
Every effort has been taken to ensure that the data listed in this catalogue is correct.
Finer Power Transmissions P/L will not accept liability for any damage or loss caused as a result of the data in this catalogue.

BOOK 7. BEARINGS – KOYO
7.2 PREMIUM FYH BEARINGS

H200 Series

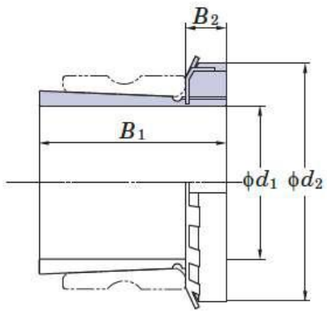

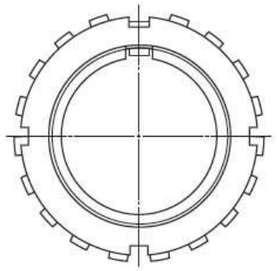

Part No.	d1	B1	B2	d2	N.W.(kg)	Matched Locking nut	Matched Locking washer
H206	25	27	8	45	0.1	KM6	MB6
H207	30	29	9	52	0.13	KM7	MB7
H208	35	31	10	58	0.17	KM8	MB8
H209	40	33	11	65	0.23	KM9	MB9
H210	45	35	12	70	0.27	KM10	MB10
H211	50	37	12	75	0.31	KM11	MB11
H212	55	38	13	80	0.35	KM12	MB12
H213	60	40	14	85	0.4	KM13	MB13
H214	60	41	14	92	0.55	KM14	MB14
H215	65	43	15	98	0.71	KM15	MB15
H216	70	46	17	105	0.85	KM16	MB16
H217	75	50	18	110	1.0	KM17	MB17
H218	80	52	18	120	1.15	KM18	MB18
H219	85	55	19	125	1.35	KM19	MB19
H220	90	58	130	20	1.45	KM20	MB20

Every effort has been taken to ensure that the data listed in this catalogue is correct.
Finer Power Transmissions P/L will not accept liability for any damage or loss caused as a result of the data in this catalogue.

FYH
Finer Power Transmissions P/L | www.finerpt.com
Adaptor Sleeves

H300 Series

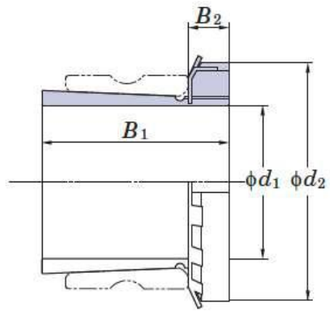

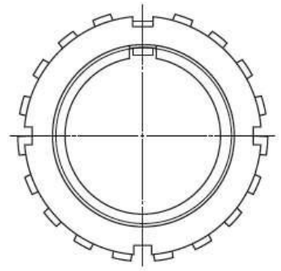

Part No.	d1	B1	B2	d2	N.W.(kg)	Matched Locking nut	Matched Locking washer
H306	25	31	8	45	0.11	KM6	MB6
H307	30	35	9	52	0.14	KM7	MB7
H308	35	36	10	58	0.19	KM8	MB8
H309	40	39	11	65	0.25	KM9	MB9
H310	45	42	12	70	0.3	KM10	MB10
H311	50	45	12.5	75	0.35	KM11	MB11
H312	55	47	13	80	0.43	KM12	MB12
H313	60	50	14	85	0.46	KM13	MB13
H314	60	52	14	92	0.72	KM14	MB14
H315	65	55	15	98	0.83	KM15	MB15
H316	70	59	16	105	1.05	KM16	MB16
H317	75	63	18	110	1.20	KM17	MB17
H318	80	65	18	120	1.40	KM18	MB18
H319	85	68	19	125	1.56	KM19	MB19
H320	90	71	20	130	1.69	KM20	MB20
H322	100	77	21	145	2.18	KM22	MB22

Every effort has been taken to ensure that the data listed in this catalogue is correct.
Finer Power Transmissions P/L will not accept liability for any damage or loss caused as a result of the data in this catalogue.

H2300 Series

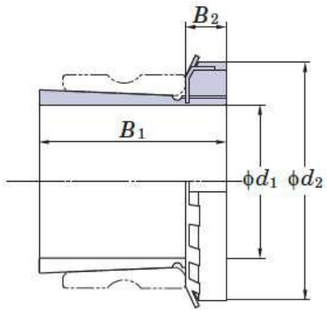

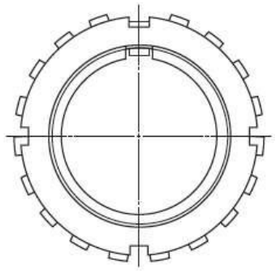

Part No.	d1	B1	B2	d2	N.W.(kg)	Matched Locking nut	Matched Locking washer
H2305	20	35	8	38	0.095	AN05	AW05
H2306	25	38	8	45	0.13	AN06	AW06
H2307	30	43	9	52	0.17	AN07	AW07
H2308	35	46	10	58	0.22	AN08	AW08
H2309	40	50	11	65	0.28	AN09	AW09
H2310	45	55	12	70	0.36	AN10	AW10
H2311	50	59	12	75	0.42	AN11	AW11
H2312	55	62	13	80	0.48	AN12	AW12
H2313	60	65	14	85	0.56	AN13	AW13
H2314	60	68	14	92	0.8	AN14	AW14
H2315	65	73	15	98	1.05	AN15	AW15
H2316	70	78	17	105	1.3	AN16	AW16
H2317	75	82	18	120	1.45	AN17	AW17
H2318	80	86	18	120	1.7	AN18	AW18
H2319	85	90	19	125	1.95	AN19	AW19
H2320	90	97	20	130	2.2	AN20	AW20
H2322	100	105	21	145	2.75	AN22	AW22
H2324	110	112	22	155	3.2	AM24	AW24
H2326	115	121	23	165	4.6	AN26	AW26
H2328	125	131	24	180	5.5	AN28	AW28
H2330	135	138	26	195	6.6	AN30	AW30
H2332	140	147	28	210	9.15	AN32	AW32
H2334	150	154	29	220	10	AN34	AW34

Every effort has been taken to ensure that the data listed in this catalogue is correct.
Finer Power Transmissions P/L will not accept liability for any damage or loss caused as a result of the data in this catalogue.

FYH
Finer Power Transmissions P/L | www.finerpt.com
Adaptor Sleeves

H3000 Series

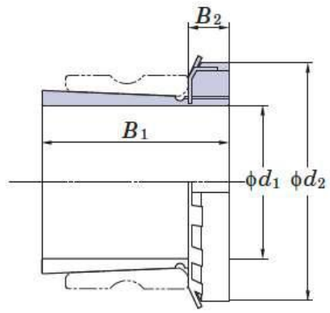

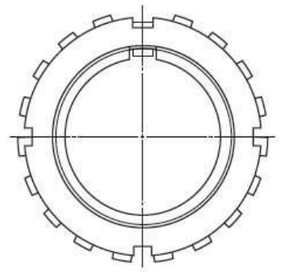

Part No.	d1	B1	B2	d2	N.W.(kg)	Matched Locking nut	Matched Locking washer
H3024	110	72	22	145	1.95	KM24	MB24
H3026	115	80	23	155	2.85	KM26	MB26
H3028	125	82	24	165	3.15	KM28	MB28
H3030	135	87	26	180	3.9	KM30	MB30
H3032	140	93	28	190	5.2	KM32	MB32
H3034	150	101	29	200	6.0	KM34	MB34
H3036	160	109	30	210	6.85	KM36	MB36
H3038	170	112	31	220	7.45	KM38	MB38

Every effort has been taken to ensure that the data listed in this catalogue is correct.
Finer Power Transmissions P/L will not accept liability for any damage or loss caused as a result of the data in this catalogue.

H3100 Series

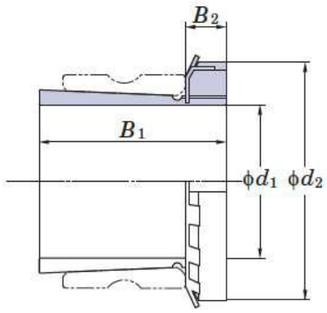

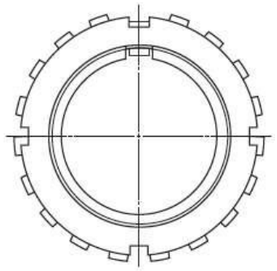

Part No.	d1	B1	B2	d2	N.W.(kg)	Matched Locking nut	Matched Locking washer
H3120	90	76	20	130	1.80	KM20	MB20
H3122	100	81	21	145	2.25	KM22	MB22
H3124	110	88	22	155	2.65	KM24	MB24
H3126	115	92	23	165	3.65	KM26	MB26
H3128	125	97	24	180	4.35	KM28	MB28
H3130	135	111	26	195	5.5	KM30	MB30
H3132	140	119	28	210	7.65	KM32	MB32
H3134	150	122	29	220	8.4	KM34	MB34
H3138	170	141	31	240	11	KM38	MB38

Every effort has been taken to ensure that the data listed in this catalogue is correct.
Finer Power Transmissions P/L will not accept liability for any damage or loss caused as a result of the data in this catalogue.

HE200 Series

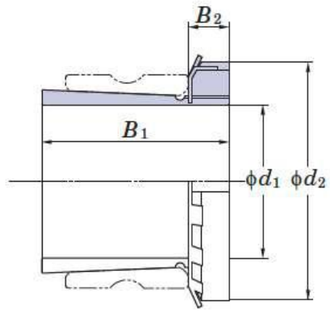

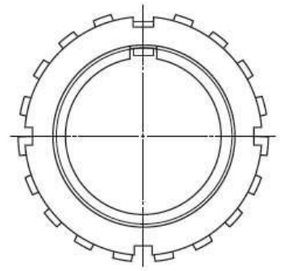

Part No.	d1	B1	B2	d2	N.W.(kg)	Matched Locking nut	Matched Locking washer
HE206	1	27	8	45	0.08	KM6	MB6
HE207	1 1/8	29	9	52	0.12	KM7	MB7
HE208	1 1/4	31	10	58	0.19	KM8	MB8
HE209	1 1/2	33	11	65	0.2	KM9	MB9
HE210	1 3/4	35	12	70	0.26	KM10	MB10
HE211	2	37	12	75	0.26	KM11	MB11
HE212	2 1/8	38	13	80	0.35	KM12	MB12
HE213	2 1/4	40	14	85	0.44	KM13	MB13
HE215	2 1/2	43	15	98	0.7	KM15	MB15
HE216	2 3/4	46	17	105	0.81	KM16	MB16
HE217	3	50	18	110	0.87	KM17	MB17
HE218	3 1/4	52	18	120	0.97	KM18	MB18
HE219	3 1/4	55	19	125	1.35	KM19	MB19
HE220	3 1/2	58	130	130	1.45	KM20	MB20

Every effort has been taken to ensure that the data listed in this catalogue is correct.
Finer Power Transmissions P/L will not accept liability for any damage or loss caused as a result of the data in this catalogue.

HE300 Series

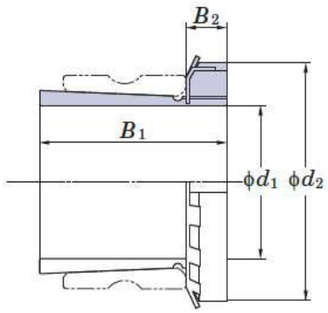

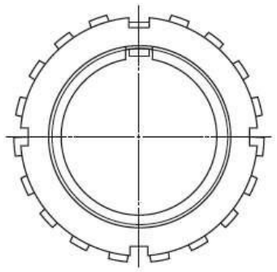

Part No.	d1	B1	B2	d2	N.W.(kg)	Matched Locking nut	Matched Locking washer
HE306	1	31	8	45	0.105	AN06	AW06
HE307	1 1/8	35	9	52	0.14	AN07	AW07
HE308	1 1/4	36	10	58	0.23	AN08	AW08
HE309	1 1/2	39	11	65	0.28	AN09	AW09
HE310	1 3/4	42	12	70	0.31	AN10	AW10
HE311	2	45	12.5	75	0.33	AN11	AW11
HE312	2 1/8	47	13	80	0.39	AN12	AW12
HE313	2 1/4	50	14	85	0.56	AN13	AW13
HE315	2 1/2	55	15	98	0.89	AN15	AW15
HE316	2 3/4	59	16	105	1.05	AN16	AW16
HE317	3	63	18	110	1.1	AN17	AW17
HE318	3 1/4	65	18	120	1.24	AN18	AW18
HE319	3 1/4	68	19	125	1.6	AN19	AW19
HE320	3 1/4	71	20	130	1.75	AN20	AW20
HE322	3 1/2	77	21	145	1.9	AN22	AW22

Every effort has been taken to ensure that the data listed in this catalogue is correct.
Finer Power Transmissions P/L will not accept liability for any damage or loss caused as a result of the data in this catalogue.

HE2300 Series

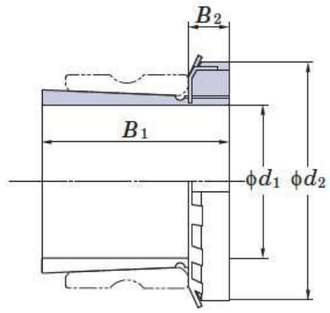

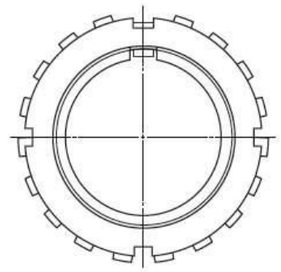

Part No.	d1	B1	B2	d2	N.W.(kg)	Matched Locking nut	Matched Locking washer
HE2305	3/4	35	8	38	0.095	AN05	AW05
HE2306	1	38	8	45	0.13	AN06	AW06
HE2307	1 1/8	43	9	52	0.17	AN07	AW07
HE2308	1 1/4	46	10	58	0.22	AN08	AW08
HE2309	1 1/2	50	11	65	0.28	AN09	AW09
HE2310	1 3/4	55	12	70	0.36	AN10	AW10
HE2311	2	59	12	75	0.42	AN11	AW11
HE2312	2 1/8	62	13	80	0.48	AN12	AW12
HE2313	2 1/4	65	14	85	0.56	AN13	AW13
HE2315	2 1/2	73	15	98	1.15	AN15	AW15
HE2316	2 3/4	78	17	105	1.05	AN16	AW16
HE2317	3	82	18	120	1.3	AN17	AW17
HE2318	3 1/4	86	18	120	1.45	AN18	AW18
HE2319	3 1/4	90	19	125	1.7	AN19	AW19
HE2320	3 1/2	97	20	130	1.95	AN20	AW20
HE2322	4	105	21	145	2.2	AN22	AW22
HE2324	4 1/4	112	22	155	2.75	AM24	AW24
HE2326	4 1/2	121	23	165	3.2	AM26	AW26

Every effort has been taken to ensure that the data listed in this catalogue is correct.
Finer Power Transmissions P/L will not accept liability for any damage or loss caused as a result of the data in this catalogue.

FYH
Finer Power Transmissions P/L | www.finerpt.com
Interchange Charts

WIR Bearings

NBR	FYH	ASAHI	NSK	KOYO		NTN	RHP	SKF	DESCRIPTION
UC	UC	UC	UC	UC		UC	1000G	YAR	SPHERICAL - GRUB SCREW, WIDE INNER RING TWO SIDES
SB	SB	B	UB	SB		AS	1200	UB	SPHERICAL - GRUB SCREW, WIDE INNER RING ONE SIDE
SA	SA	KH	EN	SA		AEL	1200EC	YET	SPHERICAL - LOCK COLLAR, WIDE INNER RING ONE SIDE
NA	NA	FG/UG	EW	HA		UEL	1000ECG	YEL	SPHERICAL - LOCK COLLAR, WIDE INNER RING TWO SIDES
SER	ER	SER	UR	ER		UCS	1100G	ER	CYLINDRICAL - GRUB SCREW, WIDE INNER RING TWO SIDES
CS	SC		CS			CS		1726200	SPHERICAL - DEEP GROOVE BEARING
CSA	SAA	KHR	ENR	SAA		AELS	1300EC	ENR	CYLINDRICAL - LOCK COLLAR, WIDE INNER RING ONE SIDE
UCX	UCX	UCX	UCX	UCX		UCX	1000G	UCX	SPHERICAL - GRUB SCREW, WIDE INNER RING ONE SIDE
UK	UK	UK	UK	UK		UK	1000KG	UK	SPHERICAL - TAPER BORE
UG/R3						UC-LLS	T1000G		SPHERICAL - TRIPLE LIP SEAL, WIDE INNER RING ONE SIDE
UC/TRL	L3		LLJ			UR*			*COULD ALSO BE SAME AS ABOVE*

Bore Size Cross Reference

Finer Part No	Other Part No	Bore Size	Example
-12	012	3/4"	UC204-12
-14	014	7/8"	UC204-14
-16	100	1"	UC205-16
-18	102	1-1/8"	UC206-18
-19	103	1-3/16"	UC206-19
-20	104	1-1/4"	UC207-20
-22	106	1-3/8"	UC207-22
-23	107	1-7/16"	UC207-23
-24	108	1-1/2"	UC208-24
-26	110	1-5/8"	UC209-26
-28	112	1-3/4"	UC209-28
-30	114	1-7/8"	UC210-30
-32	200	2"	UC211-32
-36	204	2-1/4"	UC212-36
-39	207	2-7/16"	UC213-39
-40	208	2-1/2"	UC213-40
-43	211	2-11/16"	UC214-43
-44	212	2-3/4"	UC214-44
-47	215	2-15/16"	UC215-47
-48	300	3"	UC215-48
-52	304	3-1/4"	UC217-52
-56	308	3-1/2"	UC218-56

Every effort has been taken to ensure that the data listed in this catalogue is correct.
Finer Power Transmissions P/L will not accept liability for any damage or loss caused as a result of the data in this catalogue.
Every effort has been taken to ensure that the data listed in this catalogue is correct.
Finer Power Transmissions P/L will not accept liability for any damage or loss caused as a result of the data in this catalogue.

FYH
Finer Power Transmissions P/L | www.finerpt.com
Interchange Charts

Wide Inner Ring Housings

NBR	FYH	UNIVERSAL	ASAHI	NSK	NACHI		KOYO	NTN	FAG	RHP	SKF	DESCRIPTION
P000	P000	P000	P000									EXTRA LIGHT PILLOW BLOCK (ZINC ALLOY)
P200	P200	P200	P200	P200	P200		P200	P200	P200	NP	SY500	LIGHT PILLOW BLOCK (CAST IRON)
PX00	PX00	PX00	PX00	PX00	PX00		PX00	PX00		MP	PX00	MEDIUM PILLOW BLOCK (CAST IRON)
P300	P300	P300	P300	P300	P300			P300			P300	HEAVY PILLOW BLOCK (CAST IRON)
F200	F200	F200	F200	F200	F200		F200	F200	F200	SF	FY500	LIGHT FOUR BOLT FLANGE (CAST IRON)
FX00	FX00	FX00	FX00	FX00	FX00		FX00	FX00		MSF	FX00	MEDIUM FOUR BOLT FLANGE (CAST IRON)
F300	F300	F300	F300	F300	F300			F300			F300	HEAVY FOUR BOLT FLANGE (CAST IRON)
FL000	FL000	FL000	FL000									EXTRA LIGHT TWO BOLT FLANGE (ZINC ALLOY)
FL200	FL200	FL200	FL200	FL200	FL200		FL200	FL200	FL200	SFT	FYTB500	LIGHT TWO BOLT FLANGE (CAST IRON)
FC200	FC200	FC200	FC200	FC200	FC200		FC200	FC200	FC200		FYC200	LIGHT FOUR BOLT SPIGOTTED FLANGE (CAST IRON)
FCX00	FCX00	FCX00	FCX00	FCX00	FCX00		FCX00	FCX00		MFC	FCX00	MEDIUM FOUR BOLT SPIGOTTED FLANGE (CAST IRON)
C200		C200	C200	C200	C200		C200	C200		SLC	C200	LIGHT CARTRIDGE (CAST IRON)
FB200	FB200	FB200	FK200	FK200	FK200		FK200	FH200			FK200	LIGHT THREE BOLT OFFSET FLANGE (CAST IRON)
LF200	LF200	LF200	LFL200	LF200	LF200		LF200	FB200		LFTC	LF200	EXTRA LIGHT TWO BOLT FLANGE (CAST IRON)
PA200	PA200	PA200	PA200	PA200	PA200		PA200	UP200		SNP	PA200	LIGHT TAPPED BASE PILLOW BLOCK (CAST IRON)
SBH200		SB200		SB200				SB200				MEDIUM SAW BENCH PILLOW BLOCK (CAST IRON)
T200	T200	T200	T200	T200	T200		T200	T200		ST	TU500	LIGHT TAKE-UP BLOCK (CAST IRON)
PP200		PP200	PP200	PP200	PP200		PP200	PP200		LPB	PBST	EXTRA LIGHT PILLOW BLOCK (PRESSED STEEL)
PF200		PF200	PF200	PF200	PF200		PF200	PF200		SLFE	MS	EXTRA LIGHT ROUND FLANGE (PRESSED STEEL)
PFL200		PFL200	PFL200	PFL200	PFL200		PFL200	PFL200		SLFL	MST	EXTRA LIGHT TWO BOLT FLANGE (PRESSED STEEL)
PL-P		PL-P								PNP	SYK	THERMO-PLASTIC PILLOW BLOCK
PL-F		PL-F								PSF	FYK	THERMO-PLASTIC FOUR BOLT FLANGE
PL-FL		PL-FL								PSFT	TYTBK	TWO BOLT FLANGE (THERMO-PLASTIC)
PL-PA		PL-PA								PSNP		TAPPED BASE PILLOW BLOCK (THERMO-PLASTIC)
PL-T		PL-T								PST		TAKE-UP BLOCK (THERMO-PLASTIC)
SS-P200		S-P										PILLOW BLOCK (STAINLESS STEEL)
SS-F200		S-F										FOUR BOLT FLANGE (STAINLESS STEEL)
SS-FL200		S-FL										TWO BOLT FLANGE (STAINLESS STEEL)
SS-T200		S-T										TAKE-UP BLOCK (STAINLESS STEEL)

BOOK 7: BEARINGS – KOYO
7.2 PREMIUM FYH BEARINGS

Every effort has been taken to ensure that the data listed in this catalogue is correct.
Finer Power Transmissions P/L will not accept liability for any damage or loss caused as a result of the data in this catalogue.
Every effort has been taken to ensure that the data listed in this catalogue is correct.
Finer Power Transmissions P/L will not accept liability for any damage or loss caused as a result of the data in this catalogue.

FINERPOWER TRANSMISSIONS

JAF IJK DODGE

Premium Bearings – JAF, IJK & Dodge

PREMIUM JAF, IJK & DODGE BEARINGS

Bearing Units
ISN Pillow Block (Dodge) 7.3.4

Double Row Angular Contact Ball Bearings
5200 - 5300 Series (JAF) 7.3.6

Double Row Self Aligning Ball Bearings
2200 Series (JAF) 7.3.7

Double Row Angular Contact Ball Bearings
5200 - 5300 Series (IJK) 7.3.8

Angular Contact Ball Beaings
7000 - 7900 Precision Series (IJK) 7.3.9

Double Row Self Aligning Ball Bearings
1200 & 1300 Series (IJK) 7.3.10
2200 & 2300 Series (IJK) 7.3.11

Every effort has been taken to ensure that the data listed in this catalogue is correct.
Finer Power Transmissions P/L will not accept liability for any damage or loss caused as a result of the data in this catalogue.

DODGE
Finer Power Transmissions P/L | www.finerpt.com
Bearing Units

ISN Pillow Block (Dodge)

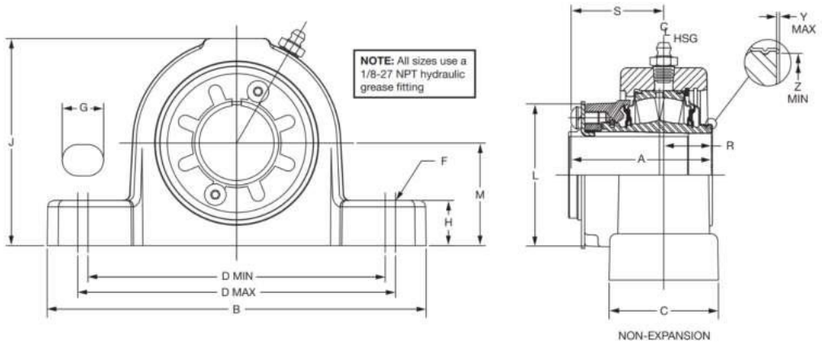

ISN Pillow Block (Dodge)

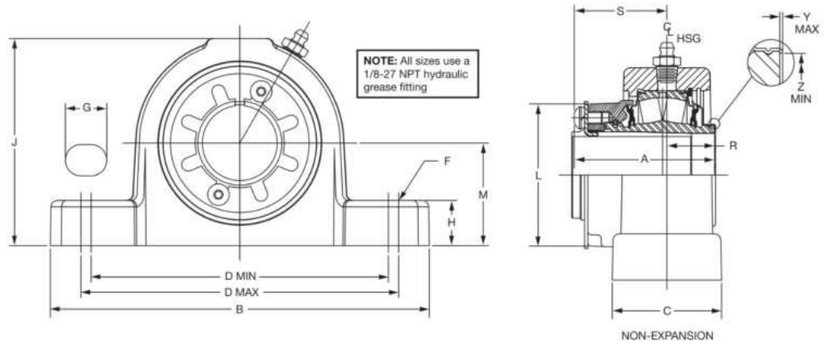

Part Number	Description	Shaft Size (mm)	A	B	C	D (min.)	D (max.)	F (Bolt Dia.)		G	H	J	L	M	R	S	Y	Z	Part Number	Description
071001	P2B508-ISN-035MFR	35	66.7	205.9	60.2	150	174.6	M12		27.3	25	110.8	67.6	60	22.6	44.1	0.51	45.7	071001	P2B508-ISN-035MFR
071002	P2B509-ISN-040MFR	40	71.4	206.3	60.2	155	174.6	M12		24.8	25	114	74.7	60	20.6	50.8	0.51	52.8	071002	P2B509-ISN-040MFR
071003	P2B510-ISN-045MFR	45	79.1	204.9	69.9	190	215	M16		27.3	28	113.8	81	60	21.1	51.4	0.51	58.4	071003	P2B510-ISN-045MFR
071004	P2B511-ISN-050MFR	50	79.1	253.9	70.2	190	215	M16		31	30	124.5	81	90	21.1	51.4	0.76	58.4	071004	P2B511-ISN-050MFR
071005	P2B512-ISN-055MFR	55	77	253.9	69.9	190	216	M16		31	30	130.3	87.1	100	23.1	54.2	0.76	65	071005	P2B512-ISN-055MFR
071006	P2B513-ISN-060MFR	60	88.9	274.9	80.2	205	236	M16		28.5	30	152.4	96.5	80	25.1	59.7	0.76	65	071006	P2B513-ISN-060MFR
071007	P2B514-ISN-065MFR	65	88.9	280.1	80.1	205	244.5	M20		34.1	32	156	106.7	95	26.9	61.7	0.76	88.1	071007	P2B514-ISN-065MFR
071008	P2B515-ISN-070MFR	70	88.9	315.9	90.2	244.5	268.3	M20		34.1	32	176	106.7	105	26.9	61.7	0.76	88.1	071008	P2B515-ISN-070MFR
071009	P2B516-ISN-075MFR	75	88.9	325.9	90.2	244.5	268.3	M20		34.1	35	196.7	124.7	105	34.1	71.4	0.76	102.9	071009	P2B516-ISN-075MFR
071010	P2B517-ISN-080MFR	80	101.6	345.3	100.3	290	324.1	M20		37.9	35	196.7	124.7	120	34.1	71.4	0.76	102.9	071010	P2B517-ISN-080MFR
071011	P2B518-ISN-090MFR	90	101.6	379.8	100.3	292.8	327.2	M20		42.9	40	218.3	132	120	37.2	82.3	0.76	114.3	071011	P2B518-ISN-090MFR
071012	P2B520-ISN-095MFR	95	120	410	120	314.4	356	M24		46.8	45	239	138.7	125	37.2	82.3	0.76	114.3	071012	P2B520-ISN-095MFR
071013	P2B522-ISN-100MFR	100	120	410	120	314.4	356	M24		46.8	45	239	138.7	125	37.2	82.3	0.76	114.3	071013	P2B522-ISN-100MFR

Every effort has been taken to ensure that the data listed in this catalogue is correct.
Finer Power Transmissions P/L will not accept liability for any damage or loss caused as a result of the data in this catalogue.

Every effort has been taken to ensure that the data listed in this catalogue is correct.
Finer Power Transmissions P/L will not accept liability for any damage or loss caused as a result of the data in this catalogue.

5200 - 5300 Series (JAF)

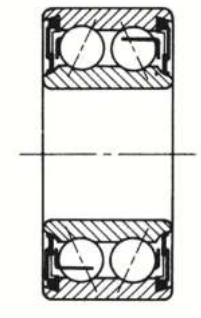

5200 2RS Series								
Bearing number	Dimensions				Limiting speed (r.p.m)	Load rating (kgf)		Weight (kg)
	Bore	O.D	Width	Chamfer		Cr	Cor	
5207-2RS	35	72	27	2	5500	3100	2400	0.43
5208-2RS	40	80	30.2	2	5000	3600	2880	0.57
5209-2RS	45	85	30.2	2	4500	4100	3300	0.62
5210-2RS	50	90	30.2	2	4100	4300	3800	0.67
5211-2RS	55	100	33.3	2.5	3800	5500	4600	0.97
5302-2RS	15	42	19	1.5	10000	1300	830	0.155

5300 2RS Series								
Bearing number	Dimensions				Limiting speed (r.p.m)	Load rating (kgf)		Weight (kg)
	Bore	O.D	Width	Chamfer		Cr	Cor	
5303-2RS	17	47	22.2	1.5	9000	1900	1250	0.19
5304-2RS	20	52	22.2	2	8000	2000	1260	0.21
5305-2RS	25	62	25.4	2	6600	2700	1800	0.35
5306-2RS	30	72	30.2	2	5500	4000	2800	0.55
5307-2RS	35	80	34.9	2.5	5000	5100	3500	0.71
5308-2RS	40	90	36.5	2.5	4400	5700	4200	1.05

5200 ZZ Series								
Bearing number	Dimensions				Limiting speed (r.p.m)	Load rating (kgf)		Weight (kg)
	Bore	O.D	Width	Chamfer		Cr	Cor	
5207ZZ	35	72	27	2.0	5500	3100	2400	0.57
5208ZZ	40	80	30.2	2.0	5000	3600	2880	0.57
5209ZZ	45	85	30.2	2.0	4500	4100	3300	0.62
5211ZZ	55	100	33.3	2.5	3800	5500	4600	0.87

5300 ZZ Series								
Bearing number	Dimensions				Limiting speed (r.p.m)	Load rating (kgf)		Weight (kg)
	Bore	O.D	Width	Chamfer		Cr	Cor	
5306ZZ	30	72	30.2	2.0	5500	4000	2800	0.79
5307ZZ	35	80	34.9	2.5	5000	5700	3500	1.05

Every effort has been taken to ensure that the data listed in this catalogue is correct.
Finer Power Transmissions P/L will not accept liability for any damage or loss caused as a result of the data in this catalogue.

2200 - 2300 Series (JAF)

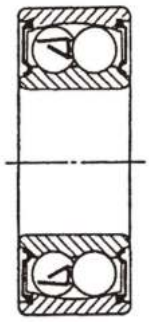

2200 2RS Series								
Bearing number	Dimensions				Limiting speed (r.p.m)	Load rating (kgf)		Weight (kg)
	Bore	O.D	Width	Chamfer		Cr	Cor	
2200-2RS	10	30	14	1	14,000	540	120	0.050
2201-2RS	12	32	14	1	13,000	560	130	0.055
2202-2RS	15	35	14	1	11,000	750	180	0.060
2203-2RS	17	40	16	1	10,500	800	200	0.098
2204-2RS	20	47	18	1.5	9,000	1,000	265	0.145
2205-2RS	25	52	18	1.5	7,700	1,220	330	0.165
2206-2RS	30	62	20	1.5	6,400	1,560	475	0.265
2207-2RS	35	72	23	2	5,500	1,600	525	0.420
2208-2RS	40	80	23	2	5,000	1,950	660	0.510
2209-2RS	45	85	23	2	4,600	2,200	740	0.550
2305-2RS	25	62	24	2	6,500	1,800	500	0.330

2300 2RS Series								
Bearing number	Dimensions				Limiting speed (r.p.m)	Load rating (kgf)		Weight (kg)
	Bore	O.D	Width	Chamfer		Cr	Cor	
2306-2RS	30	72	27	2	5,600	2,150	640	0.500

Every effort has been taken to ensure that the data listed in this catalogue is correct.
Finer Power Transmissions P/L will not accept liability for any damage or loss caused as a result of the data in this catalogue.

5200 - 5300 Series (IJK)

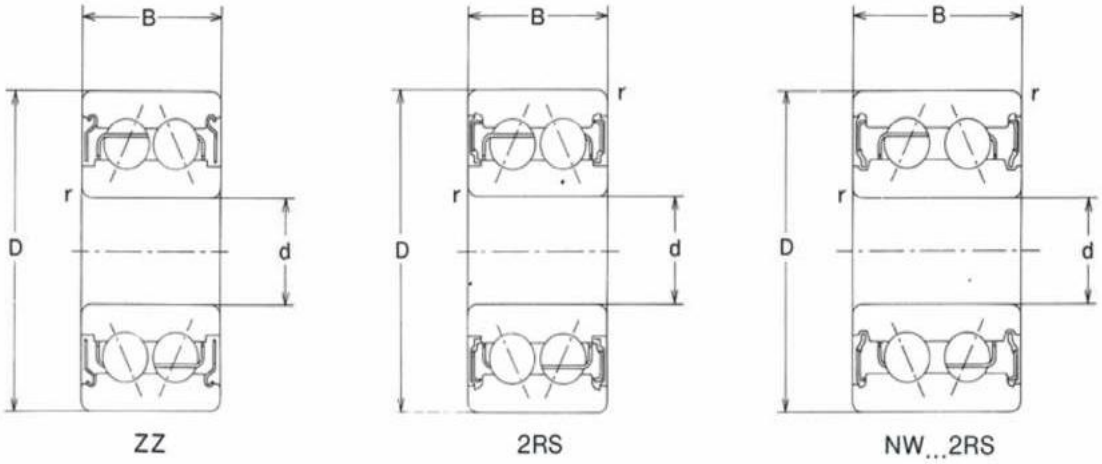

5200 Series								
Bearing No.	Bore	O.D	Width	Chamfer	Balls		Load Rating	
	d	D	B	r (min)	No.	Size	Dynamic C (kgf)	Static CO (kgf)
5200	10	30	14.3	0.6	14	4.762	730	400
5201	12	32	15.9	0.6	14	5.953	1070	590
5202	15	35	15.9	0.6	14	5.953	1190	715
5203	17	40	17.5	0.6	18	5.55	1170	765
5204	20	47	20.6	1	16	6.747	2000	1270
5205	25	52	20.6	1	18	6.747	2170	1500
5206	30	62	23.8	1	18	8.731	3000	2150

Stocked in both 2RS and ZZ

5300 Series								
Bearing No.	Bore	O.D	Width	Chamfer	Balls		Load Rating	
	d	D	B	r (min)	No.	Size	Dynamic C (kgf)	Static CO (kgf)
5302	15	42	19	1	16	6.350	1370	755
5303	17	47	22.225	1	16	7.144	1600	955
5304	20	52	22.2	1.5	16	7.938	2010	1300
5305	25	62	25.4	1.5	18	8.731	2570	1850

Stocked in both 2RS and ZZ

Every effort has been taken to ensure that the data listed in this catalogue is correct.
Finer Power Transmissions P/L will not accept liability for any damage or loss caused as a result of the data in this catalogue.

7000 - 7900 Precision Series (IJK)

BEARING NUMBER	Bore	O.D	WIDTH
	d	D	B
7001CTYNDULP4	12	28	8
7204CTYNDULP4	20	47	14
7900CTYNDULP4	10	22	6
7901CTYNDULP4	12	24	6
7902CTYNDULP4	15	28	7
7903CTYNDULP4	17	30	9
7904CTYNDULP4	20	37	9
7905CTYNDULP4	25	42	9
7906CTYNDULP4	30	47	9
7907CTYNDULP4	35	55	10
7908CTYNDULP4	40	62	12
7909CTYNDULP4	45	68	12
7910CTYNDULP4	50	72	12
7911CTYNDULP4	55	80	13
7912CTYNDULP4	60	85	13

Every effort has been taken to ensure that the data listed in this catalogue is correct.
Finer Power Transmissions P/L will not accept liability for any damage or loss caused as a result of the data in this catalogue.

1200 & 1300 Series (IJK)

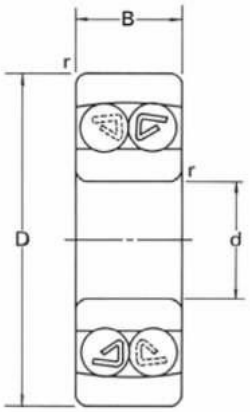

1200 Series								
Bearing No.	Bore	O.D	Width	Chamfer	Balls		Load Rating	
	d	D	B	r(min)	No.	Size	Dynamic C (kgf)	Static CO (kgf)
1200	10	30	9	0.6	18	4.762	570	121
1201	12	32	10	0.6	20	4.7	580	130
1202	15	35	11	0.6	20	5.55	775	179
1203	17	40	12	0.6	24	5.55	815	205
1204	20	47	14	1	24	6.35	1020	266
1205 (K)	25	52	15	1	24	7.14	1250	335
1206 (K)	30	62	16	-	-	-	-	-
1302	15	42	13	1	20	6.35	990	234

(K). Stocked in both tapered and parallel bore.

1300 Series								
Bearing No.	Bore	O.D	Width	Chamfer	Balls		Load Rating	
	d	D	B	r(min)	No.	Size	Dynamic C (kgf)	Static CO (kgf)
1303	17	47	14	1	22	7.44	1300	325
1304	20	52	15	1	24	7.44	1280	340

Every effort has been taken to ensure that the data listed in this catalogue is correct.
Finer Power Transmissions P/L will not accept liability for any damage or loss caused as a result of the data in this catalogue.

2200 & 2300 Series (IJK)

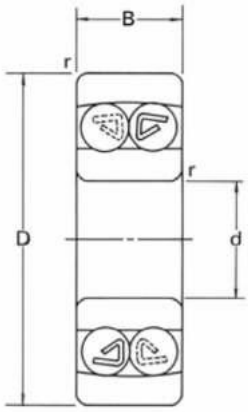

2200 Series									
Bearing No.		Bore	O.D	Width	Chamfer	Balls		Load Rating	
Open	Rubber Sealed	d	D	B	r(min)	No.	Size	Dynamic C (kgf)/(ibf)	Static CO (kgf)/(ibf)
-	2200-2RS	10	30	14	0.6	18	5.55	760	162
-	2201-2RS	12	32	14	0.6	20	5.55	790	177
-	2202-2RS	15	35	14	0.6	22	5.55	795	188
-	2203-2RS	17	40	16	0.6	22	6.35	1010	247
2204	2204-2RS	20	47	18	1.1	24	7.44	1310	340
2205	2205-2RS	25	52	18	1	26	7.144	1270	350
-	2206-2RS	30	62	20	1	28	7.938	1560	460
-	2300-2RS	10	35	17	0.6	18	6.35	953	205

2300 Series									
Bearing No.		Bore	O.D	Width	Chamfer	Balls		Load Rating	
Open	Rubber Sealed	d	D	B	r(min)	No.	Size	Dynamic C (kgf)/(ibf)	Static CO (kgf)/(ibf)
-	2301-2RS	12	37	17	1	18	7.144	1240	278
-	2302-2RS	15	42	17	1.1	20	7.144	1250	296
-	2303-2RS	17	47	19	1.1	20	7.93	1500	365
-	2304-2RS	20	52	21	1.1	22	8.73	1880	480
-	2305-2RS	25	62	24	1.5	22	10.31	2520	675

Every effort has been taken to ensure that the data listed in this catalogue is correct.
Finer Power Transmissions P/L will not accept liability for any damage or loss caused as a result of the data in this catalogue.

FINERPOWER TRANSMISSIONS

Premium Japanese Bearing

PREMIUM JAPANESE BEARINGS

Needle Roller Bearings 7.4.6
Shell Type - Metric 7.4.6
TLA Open Series 7.4.6
TLA - UU Rubber Seals Series 7.4.10
TA Heavy Duty Series 7.4.12
IRT Inner Ring Series 7.4.18
Shell Type - Imperial 7.4.22
IRB Inner Ring Series 7.4.22
BA Series w/Oil Hole 7.4.24
BHA Heavy Duty w/Oil Hole Series 7.4.30
Machined Type - Imperial 7.4.32
BR w/o Inner Ring Series 7.4.32
BR UU Series 7.4.34
Machined Type - Metric 7.4.36
RNA w/o Inner Ring Series 7.4.36
RNA UU Rubber Sealed Series 7.4.38
TAF w/o Inner Ring Series 7.4.40
Machined Type w/Inner Ring - Metric 7.4.46
TAFI w/Inner Ring Series 7.4.46
NA w/Inner Ring Series 7.4.50
NA 4900UU Rubber Sealed w/Inner Ring Series 7.4.54
NA 6900UU Rubber Sealed w/Inner Ring Series 7.4.56
Machined Type - Inner Rings 7.4.58
LRT Series 7.4.58
LRB Series 7.4.64
Needle Roller Thrust Bearings 7.4.66
NTB Series & AS Washers To Suit 7.4.66
Thrust Needle Roller & Cage Assembly 7.4.68
AZK Series & Outer (GS) & Inner (WS) Rings To Suit 7.4.68
Combined Needle Roller Bearings 7.4.70
NATA/NATB Series 7.4.70
Needle Roller Cages - Metric 7.4.72
KT Cage Series 7.4.72
Cam Followers - Metric & Imperial 7.4.74
CF Series - Cage Type 7.4.74
CF Series - Full Complement 7.4.76
CR Series 7.4.78
Stainless Steel CF Series 7.4.82
NUCF Series 7.4.84
CRH Series 7.4.86
CFE Series 7.4.90
Roller Followers 7.4.92
Roller Followers - Imperial 7.4.92
CRY-VUUR Non-Separable Full Complement Series 7.4.92
Roller Followers - Metric 7.4.94
NART-UUR/VUUR Non-Separable Cage Series 7.4.94
NAST-ZZUR Separable w/Inner Ring Cage Series 7.4.96
NURT Non-Separable Cage Series 7.4.98
Sheave Roller Full Compliment 7.4.100
NAS5000 Series 7.4.100

Every effort has been taken to ensure that the data listed in this catalogue is correct.
Finer Power Transmissions P/L will not accept liability for any damage or loss caused as a result of the data in this catalogue.

Cylindrical Roller Full Compliment 7.4.102
NAG 49UU Rubber Sealed Series 7.4.102

Spherical Plain Bearings 7.4.104
SB-A Metric Series 7.4.104
SBB-2RS Imperial Series. 7.4.106
GE-G & GE-GS-2RS Heavy Duty Series 7.4.108
GE-E & GE-ES-2RS Series. 7.4.110
GE-EC & GE-EC-2RS Series (PTFE Lined) 7.4.112

Rod Ends with Male Thread 7.4.114
POS Series (Metric Male) 7.4.114
POSB Series (Imperial Male) 7.4.115

Rod Ends with Female Thread 7.4.116
PHS Series (Metric Female) 7.4.116
PHSB Series (Imperial Female) 7.4.118

Interchange Charts 7.4.120
Spherical Plain Bearings 7.4.120
Rod Ends - Metric 7.4.120
Rod Ends - Imperial 7.4.122
Needle Roller Bearings 7.4.123

Every effort has been taken to ensure that the data listed in this catalogue is correct.
Finer Power Transmissions P/L will not accept liability for any damage or loss caused as a result of the data in this catalogue.

JAPANESE BEARINGS
Finer Power Transmissions P/L | www.finerpt.com

Needle Roller Bearings
Shell Type - Metric

TLA Open Series

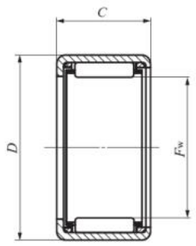

TA···Z TLA···Z

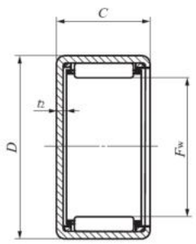

TAM TLAM

TLA Open Series

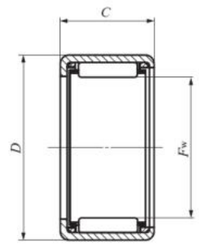

TA···Z TLA···Z

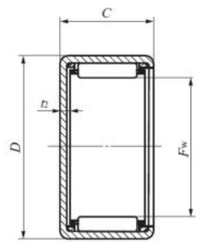

TAM TLAM

Shaft dia. mm	Identification number				Boundary dimensions (mm)					Standard mounting dimensions (mm)				Basic dynamic load rating C	Basic static load rating C0	Allowable rotational speed (1)	Assembled inner ring
										Shaft dia. h6							
												N7					
	Standard	Mass (g)	Closed end*	Mass (g)	Fw	D	C	t2 Max.		Max	Min.	Max.	Min.	N	N	rpm	
4	TLA 48 Z	1.54	TLAM 48	1.67	4	8	8	1		4	3.992	7.996	7.981	1 350	1 010	75 000	-
5	TLA 59 Z	1.9	TLAM 59	2	5	9	9	1		5	4.992	8.996	8.981	1 880	1 600	65 000	-
6	TLA 69 Z	2.2	TLAM 69	2.3	6	10	9	1		6	5.992	9.996	9.981	2 100	1 900	55 000	-
8	TLA 810 Z	3.1	TLAM 810	3.3	8	12	10	1		8	7.991	11.995	11.977	3 320	3 670	45 000	-
9	TLA 910 Z	3.4	TLAM 910	3.6	9	13	10	1		9	8.991	12.995	12.977	3 500	4 040	45 000	-
	TLA 912 Z	4	TLAM 912	4.3	9	13	12	1		9	8.991	12.995	12.977	4 460	5 510	45 000	-
10	TLA 1010 Z	3.7	TLAM 1010	4	10	14	10	1		10	9.991	13.995	13.977	3 870	4 740	40 000	IRT 710
	TLA 1012 Z	4.4	TLAM 1012	4.8	10	14	12	1		10	9.991	13.995	13.977	4 920	6 460	40 000	IRT 712
	TLA 1015 Z	5.5	TLAM 1015	5.9	10	14	15	1		10	9.991	13.995	13.977	6 390	9 040	40 000	IRT 715
12	TLA 1210 Z	4.3	TLAM 1219	4.7	12	16	10	1		12	11.989	15.995	15.977	4 350	5 810	35 000	IRT 810
	TLA 1212 Z	8.6	TLAM 1212	9.4	12	18	12	1.3		12	11.989	17.995	17.977	6 420	7 490	35 000	IRT 812
13	TLA 1312 Z	9.2	TLAM 1312	10.1	13	19	12	1.3		13	12.989	18.993	18.972	6 760	8 170	30 000	IRT 1012
14	TLA 1412 Z	9.8	TLAM 1412	10.8	14	20	12	1.3		14	13.989	19.993	19.972	7 080	8 840	30 000	IRT 1012-2
	TLA 1416 Z	13.2	TLAM 1416	14.3	14	20	16	1.3		14	13.989	19.993	19.972	8 950	12 000	30 000	IRT 1016-2
15	TLA 1512 Z	10.4	TLAM 1512	11.5	15	21	12	1.3		15	14.989	20.993	20.972	7 380	9 520	25 000	IRT 1212
	TLA 1516 Z	14	TLAM 1516	15.2	15	21	16	1.3		15	14.989	20.993	20.972	9 330	12 900	25 000	IRT 1216
	TLA 1522 Z	19.1	TLAM 1522	20.5	15	21	22	1.3		15	14.989	20.993	20.972	13 600	20 900	25 000	IRT 1222
16	TLA 1612 Z	10.9	TLAM 1612	12.2	16	22	12	1.3		16	15.989	21.993	21.972	7 670	10 200	25 000	IRT 1212-1
	TLA 1616 Z	14.8	TLAM 1616	16.1	16	22	16	1.3		16	15.989	21.993	21.972	9 700	13 800	25 000	IRT 1216-1
	TLA 1622 Z	20	TLAM 1622	21.5	16	22	22	1.3		16	15.989	21.993	21.972	14 200	22 400	25 000	IRT 1222-1
17	TLA 1712 Z	11.5	TLAM 1712	13	17	23	12	1.3		17	16.989	22.993	22.972	7 960	10 900	25 000	-
18	TLA 1812 Z	12	TLAM 1812	13.7	18	24	12	1.3		18	17.989	23.993	23.972	8 230	11 500	20 000	IRT 1512
	TLA 1816 Z	16.2	TLAM 1816	17.9	18	24	16	1.3		18	17.989	23.993	23.972	10 400	15 600	20 000	IRT 1516
20	TLA 2012 Z	13.2	TLAM 2012	15.2	20	26	12	1.3		20	19.987	25.993	25.972	8 740	12 900	20 000	-
	TLA 2016 Z	17.8	TLAM 2016	19.9	20	26	16	1.3		20	19.987	25.993	25.972	11 100	17 500	20 000	IRT 1716
	TLA 2020 Z	22	TLAM 2020	24	20	26	20	1.3		20	19.987	25.993	25.972	14 500	24 700	20 000	IRT 1720
	TLA 2030 Z	33	TLAM 2030	35	20	26	30	1.3		20	19.987	25.993	25.972	22 300	42 900	20 000	IRT 1730
22	TLA 2212 Z	15.6	TLAM 2212	18.1	22	28	12	1.3		22	21.987	27.993	27.972	9 230	14 300	18 000	-
	TLA 2216 Z	21.5	TLAM 2216	24	22	28	16	1.3		22	21.987	27.993	27.972	11 700	19 300	18 000	IRT 1716-2
	TLA 2220 Z	26.5	TLAM 2220	29	22	28	20	1.3		22	21.987	27.993	27.972	15 300	27 300	18 000	IRT 1720-2
25	TLA 2512 Z	19.7	TLAM 2512	23.5	25	32	12	2.8		25	24.987	31.992	31.967	9 440	13 900	15 000	-
	TLA 2516 Z	26	TLAM 2516	29.5	25	32	16	2.8		25	24.987	31.992	31.967	12 800	20 500	15 000	-
	TLA 2520 Z	32	TLAM 2520	36	25	32	20	2.8		25	24.987	31.992	31.967	16 900	29 300	15 000	IRT 2020-1
	TLA 2526 Z	41.5	TLAM 2526	45.5	25	32	26	2.8		25	24.987	31.992	31.967	22 600	42 500	15 000	IRT 2026-1

*Not a stocked range although available on request

Note. (1) Allowable rotational speed applied to oil lubrication. For grease lubrication, a maximum of 60% of this value is allowable.

Every effort has been taken to ensure that the data listed in this catalogue is correct.
Finer Power Transmissions P/L will not accept liability for any damage or loss caused as a result of the data in this catalogue.

Every effort has been taken to ensure that the data listed in this catalogue is correct.
Finer Power Transmissions P/L will not accept liability for any damage or loss caused as a result of the data in this catalogue.

JAPANESE BEARINGS
Finer Power Transmissions P/L | www.finerpt.com

Needle Roller Bearings
Shell Type - Metric

TLA Open Series

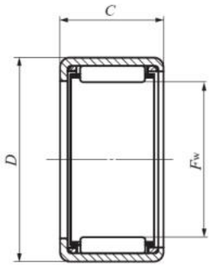

TA···Z TLA···Z

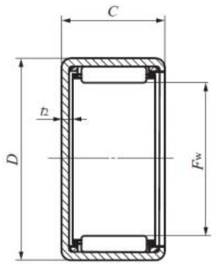

TAM TLAM

TLA Open Series

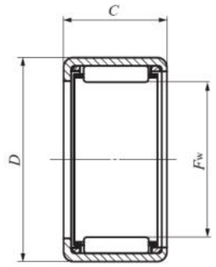

TA···Z TLA···Z

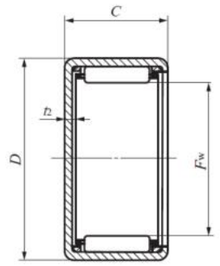

TAM TLAM

Shaft dia. mm	Identification number				Boundary dimensions (mm)					Standard mounting dimensions (mm)				Basic dynamic load rating C	Basic static load rating C0	Allowable rotational speed (1)	Assembled inner ring
										Shaft dia. h6							
												N7					
	Standard	Mass (g)	Closed end*	Mass (g)	Fw	D	C	t2 Max.		Max	Min.	Max.	Min.	N	N	rpm	
28	TLA 2816 Z	28.5	TLAM 2816	33.5	28	35	16	2.8		28	27.987	34.992	34.967	13 800	23 500	13 000	-
	TLA283525	47	-	-	28	35	25	2.8		28	27.987	34.992	34.967	-	-	13 000	-
	TLA 2820 Z	35.5	TLAM 2820	40.5	28	35	20	2.8		28	27.987	34.992	34.967	18 300	33 600	13 000	IRT 2220-1
30	TLA 3012 Z	23.5	TLAM 3012	29	30	37	12	2.8		30	29.987	36.992	36.967	10 400	16 600	12 000	-
	TLA 3016 Z	30.5	TLAM 3016	36	30	37	16	2.8		30	29.987	36.992	36.967	14 100	24 500	12 000	-
	TLA 3018 Z	34.5	TLAM 3018	40	30	37	18	2.8		30	29.987	36.992	36.967	16 400	29 800	12 000	-
	TLA 3020 Z	38	TLAM 3020	43.5	30	37	20	2.8		30	29.987	36.992	36.967	18 600	35 100	12 000	IRT 2520-1
	TLA 3026 Z	49	TLAM 3026	54.5	30	37	26	2.8		30	29.987	36.992	36.967	24 800	50 900	12 000	IRT 2526-1
35	TLA 3512 Z	27	TLAM 3512	34.5	35	42	12	2.8		35	34.984	41.992	41.967	11 600	20 000	10 000	IRT 3012
	TLA 3516 Z	35	TLAM 3516	42.5	35	42	16	2.8		35	34.984	41.992	41.967	15 700	29 600	10 000	-
	TLA 3520 Z	43.5	TLAM 3520	51	35	42	20	2.8		35	34.984	41.992	41.967	20 700	42 300	10 000	IRT 3020
40	TLA 4012 Z	30	TLAM 4012	40	40	47	12	2.8		40	39.984	46.992	46.967	12 400	22 800	8 500	-
	TLA 4016 Z	39	TLAM 4016	49	40	47	16	2.8		40	39.984	46.992	46.967	16 700	33 700	8 500	-
	TLA 4020 Z	49	TLAM 4020	58.5	40	47	20	2.8		40	39.984	46.992	46.967	22 100	48 200	8 500	IRT 3520
45	TLA 4516 Z	43.5	TLAM 4516	56	45	52	16	2.8		45	44.984	51.991	51.961	17 800	37 800	7 500	-
	TLA 4520 Z	54.5	TLAM 4520	67	45	52	20	2.8		45	44.984	51.991	51.961	23 400	54 000	7 500	IRT 4020
50	TLA 5020 Z	69	TLAM 5020	84.5	50	58	20	2.8		50	49.984	57.991	57.961	28 800	64 100	6 500	IRT 4520
	TLA 5025 Z	86	TLAM 5025	107	50	58	25	2.8		50	49.984	57.991	57.961	36 900	88 400	6 500	IRT 4525
55	TLA 5520 Z	75	TLAM 5520	98.5	55	63	20	2.8		55	54.981	62.991	62.961	29 800	69 400	5 500	IRT 5020-1
	TLA 5525 Z	98.5	TLAM 5525	118	55	63	25	2.8		55	54.981	62.991	62.961	38 300	95 700	5 500	IRT 5025-1

*Not a stocked range although available on request

Note. (1) Allowable rotational speed applied to oil lubrication. For grease lubrication, a maximum of 60% of this value is allowable.

Every effort has been taken to ensure that the data listed in this catalogue is correct.
Finer Power Transmissions P/L will not accept liability for any damage or loss caused as a result of the data in this catalogue.

Every effort has been taken to ensure that the data listed in this catalogue is correct.
Finer Power Transmissions P/L will not accept liability for any damage or loss caused as a result of the data in this catalogue.

JAPANESE BEARINGS
Finer Power Transmissions P/L | www.finerpt.com
Needle Roller Bearings
Shell Type - Metric

TLA - UU Rubber Seals Series

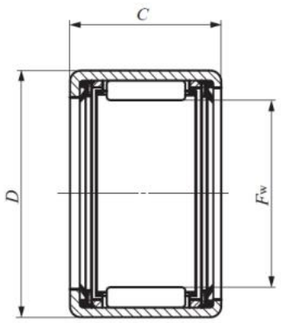

TLA···UU

TLA - UU Rubber Seals Series

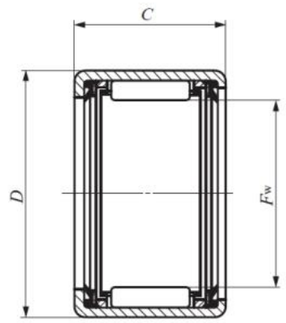

TLA···UU

Shaft dia.mm	Identification number	Mass (Ref.) g	Boundary dimensions mm Fw	D	C		Standard mounting dimensions (mm) Shaft dia. h6 Max.	Min.	Housing bore dia.N7 Max.	Min.	Basic dynamic load rating C N	Basic static load rating C0	Allowable rotational speed (1) rpm
12	TLA 1216 UU	11.7	12	18	16		12	11.989	17.995	17.977	6 420	7 490	14 000
14	TLA 1416 UU	13.3	14	20	16		14	13.989	19.993	19.972	7 080	8 840	12 000
15	TLA 1516 UU	14	15	21	16		15	14.989	20.993	20.972	7 380	9 520	11 000
16	TLA 1616 UU	14.8	16	22	16		16	15.987	21.993	21.972	7 670	10 200	11 000
18	TLA 1816 UU	16.3	18	24	16		16	17.989	23.993	23.972	8 230	11 500	9 000
20	TLA 2016 UU	17.8	20	26	16		20	19.987	25.993	25.972	8 740	12 900	9 000
	TLA 2020 UU	22.5	20	26	20		20	19.987	25.993	25.972	11 100	17 500	9 000
25	TLA 2516 UU	26	25	32	16		25	24.987	31.992	31.967	9 440	13 900	7 000
	TLA 2520 UU	33	25	32	20		25	24.987	31.992	31.967	12 800	20 500	7 000
28	TLA 2820 UU	36.5	28	35	20		28	27.987	34.992	34.967	13 800	23 500	6 000
30	TLA 3016 UU	30.5	30	37	16		30	29.987	36.992	36.967	10 400	16 600	5 500
	TLA 3020 UU	39	30	37	20		30	29.987	36.992	36.967	14 100	24 500	5 500
35	TLA 3516 UU	35	35	42	16		35	34.984	41.992	41.967	11 600	20 000	5 000
40	TLA 4016 UU	39.5	40	47	16		40	39.984	46.992	46.967	12 400	22 800	4 500
	TLA 4020 UU	50.5	40	47	20		40	39.984	46.992	46.967	16 700	33 700	4 500

Note. (1) Allowable rotational speed applied to oil lubrication. For grease lubrication, a maximum of 60% of this value is allowable.

Every effort has been taken to ensure that the data listed in this catalogue is correct.
Finer Power Transmissions P/L will not accept liability for any damage or loss caused as a result of the data in this catalogue.
Every effort has been taken to ensure that the data listed in this catalogue is correct.
Finer Power Transmissions P/L will not accept liability for any damage or loss caused as a result of the data in this catalogue.

JAPANESE BEARINGS
Finer Power Transmissions P/L | www.finerpt.com

Needle Roller Bearings
Shell Type - Metric

TA Heavy Duty Series

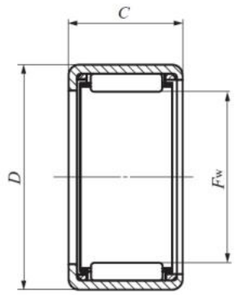

TA···Z TLA···Z

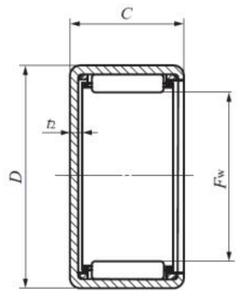

TAM TLAM

TA Heavy Duty Series

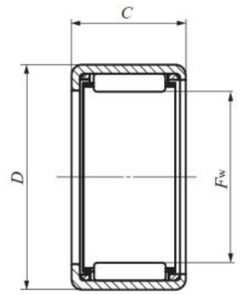

TA···Z TLA···Z

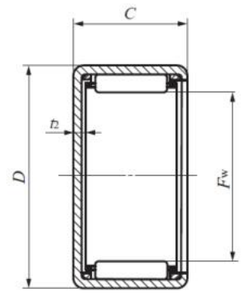

TAM TLAM

Shaft dia. mm	Identification number				Boundary dimensions (mm)					Standard mounting dimensions (mm)				Basic dynamic load rating C	Basic static load rating C0	Allowable rotational speed (1)	Assembled inner ring
										Shaft dia. h6		Housing bore dia J7					
												J7					
	Standard	Mass g	Closed end	Mass g	Fw	D	C	t2 Max.		Max	Min.	Max.	Min.	N	N	rpm	
8	TA 810 Z	6.7	TAM 810	7.1	8	15	10	1.3		8	7.991	15.01	14.992	3 470	2 880	45 000	-
	TA 815 Z	9.7	TAM 815	10.1	8	15	15	1.3		8	7.991	15.01	14.992	5 780	5 570	45 000	-
9	TA 912 Z	8.7	TAM 912	9.2	9	16	12	1.3		9	8.991	16.01	15.992	5 140	4 880	45 000	-
	TA 916 Z	11.4	TAM 916	11.9	9	16	16	1.3		9	8.991	16.01	15.992	6 960	7 210	45 000	-
10	TA 1010 Z	7.9	TAM 1010	8.5	10	17	10	1.3		10	9.991	17.01	16.992	4 150	3 780	40 000	IRT 710
	TA 1012 Z	9.3	TAM 1012	10	10	17	12	1.3		10	9.991	17.01	16.992	5 590	5 540	40 000	IRT 712
	TA 1015 Z	11.5	TAM 1015	12.2	10	17	15	1.3		10	9.991	17.01	16.992	6 920	7 300	40 000	IRT 715
	TA 1020 Z	15.4	TAM 1020	16	10	17	20	1.3		10	9.991	17.01	16.992	9 990	11 700	40 000	-
12	TA 1212 Z	10.5	TAM 1212	11.5	12	19	12	1.3		12	11.989	19.012	18.991	6 000	6 310	35 000	IRT 812
	TA 1215 Z	13.1	TAM 1215	14	12	19	15	1.3		12	11.989	19.012	18.991	7 440	8 320	35 000	IRT 815
	TA 1220 Z	17.3	TAM 1220	18.3	12	19	20	1.3		12	11.989	19.012	18.991	10 700	13 300	35 000	-
	TA 1225 Z	21.5	TAM 1225	22.5	12	19	25	1.3		12	11.989	19.012	18.991	13 800	18 300	35 000	-
14	TA 1416 Z	18.4	TAM 1416	19.6	14	22	16	1.3		14	13.989	22.012	21.991	10 500	12 000	30 000	IRT 1016-2
	TA 1420 Z	23	TAM 1420	24	14	22	20	1.3		14	13.989	22.012	21.991	13 900	17 200	30 000	IRT 1020-2
15	TA 1510 Z	10.8	TAM 1510	12.3	15	22	10	1.3		15	14.989	22.012	21.991	5 290	5 680	25 000	IRT 1010-1
	TA 1512 Z	12.9	TAM 1512	14.3	15	22	12	1.3		15	14.989	22.012	21.991	7 120	8 310	25 000	IRT 1012-1
	TA 1515 Z	15.9	TAM 1515	17.3	15	22	15	1.3		15	14.989	22.012	21.991	8 830	11 000	25 000	IRT 1015-1
	TA 1520 Z	21	TAM 1520	22.5	15	22	20	1.3		15	14.989	22.012	21.991	12 700	17 600	25 000	IRT 1020-1
	TA 1525 Z	25	TAM 1525	26.5	15	22	25	1.3		15	14.989	22.012	21.991	16 300	24 200	25 000	IRT 1025-1
16	TA 1616 Z	20	TAM 1616	22	16	24	16	1.3		16	15.989	24.012	23.991	11 100	13 300	25 000	IRT 1216-1
	TA 1620 Z	25	TAM 1620	27	16	24	20	1.3		16	15.989	24.012	23.991	14 700	19 100	25 000	IRT 1220-1
17	TA 1715 Z	17.6	TAM 1715	19.5	17	24	15	1.3		17	16.989	24.012	23.991	9 660	12 700	25 000	IRT 1215-2
	TA 1720 Z	23.5	TAM 1720	25	17	24	20	1.3		17	16.989	24.012	23.991	13 900	20 400	25 000	IRT 1220-2
	TA 1725 Z	29	TAM 1725	31	17	24	25	1.3		17	16.989	24.012	23.991	17 900	28 100	25 000	IRT 1225-2
18	TA 1813 Z	16.4	TAM 1813	18.5	18	25	13	1.3		18	17.989	25.012	24.991	9 100	12 000	20 000	IRT 1513
	TA 1815 Z	18.5	TAM 1815	20.5	18	25	15	1.3		18	17.989	25.012	24.991	10 100	13 600	20 000	IRT 1515
	TA 1820 Z	24.5	TAM 1820	26.5	18	25	20	1.3		18	17.989	25.012	24.991	14 500	21 800	20 000	IRT 1520
	TA 1825 Z	30.5	TAM 1825	32.5	18	25	25	1.3		18	17.989	25.012	24.991	18 600	30 000	20 000	IRT 1525

Note. (1) Allowable rotational speed applied to oil lubrication. For grease lubrication, a maximum of 60% of this value is allowable.

Every effort has been taken to ensure that the data listed in this catalogue is correct.
Finer Power Transmissions P/L will not accept liability for any damage or loss caused as a result of the data in this catalogue.

Every effort has been taken to ensure that the data listed in this catalogue is correct.
Finer Power Transmissions P/L will not accept liability for any damage or loss caused as a result of the data in this catalogue.

JAPANESE BEARINGS
Finer Power Transmissions P/L | www.finerpt.com

Needle Roller Bearings
Shell Type - Metric

TA Heavy Duty Series

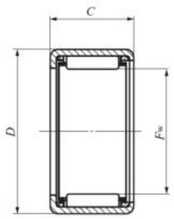

TA···Z TLA···Z

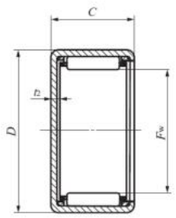

TAM TLAM

TA Heavy Duty Series

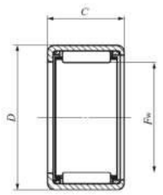

TA···Z TLA···Z

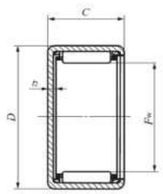

TAM TLAM

Shaft dia. mm	Identification number				Boundary dimensions (mm)					Standard mounting dimensions (mm)				Basic dynamic load rating C	Basic static load rating C0	Allowable rotational speed (1)	Assembled inner ring
										Shaft dia. h6		Housing bore dia J7					
												J7					
	Standard	Mass g	Closed end	Mass g	Fw	D	C	t2 Max.		Max	Min.	Max.	Min.	N	N	rpm	
20	TA 2015 Z	20	TAM 2015	22.5	20	27	15	1.3		20	19.987	27.012	26.991	10 400	14 600	20 000	IRT 1515-2
	TA 2020 Z	26.5	TAM 2020	29	20	27	20	1.3		20	19.987	27.012	26.991	15 000	23 400	20 000	IRT 1520-2
	TA 2025 Z	33	TAM 2025	35.5	20	27	25	1.3		20	19.987	27.012	26.991	19 200	32 200	20 000	IRT 1525-2
	TA 2030 Z	39.5	TAM 2030	42	20	27	30	1.3		20	19.987	27.012	26.991	23 100	41 000	20 000	IRT 1530-2
	TA 202820 Z	30	TAM 202820	32.5	20	28	20	1.3		20	19.987	27.012	26.991	16 900	24 300	20 000	IRT 1520-2
21	TA 2120 Z	31.5	TAM 2120	34.5	21	29	16	1.3		21	20.987	29.012	28.991	17 600	25 900	19 000	IRT 1720-1
22	TA 2210 Z	15	TAM 2210	18.1	22	29	10	1.3		22	21.987	29.012	28.991	6 650	8 500	18 000	IRT 1710-2
	TA 2215 Z	21.5	TAM 2215	24.5	22	29	15	1.3		22	21.987	29.012	28.991	11 100	16 400	18 000	IRT 1715-2
	TA 2220 Z	29	TAM 2220	32	22	29	20	1.3		22	21.987	29.012	28.991	16 000	26 300	18 000	IRT 1720-2
	TA 2225 Z	35.5	TAM 2225	38.5	22	29	25	1.3		22	21.987	29.012	28.991	19 700	34 300	18 000	IRT 1725-2
	TA 2230 Z	42.5	TAM 2230	45.5	22	29	30	1.3		22	21.987	29.012	28.991	23 800	43 700	18 000	IRT 1730-2
	TA 223016 Z	26	TAM 223016	29	22	30	16	1.3		22	21.987	30.012	29.991	13 200	18 200	18 000	IRT 1716-2
	TA 223020 Z	32.5	TAM 223020	35.5	22	30	20	1.3		22	21.987	30.012	29.991	17 500	26 100	18 000	IRT 1720-2
24	TA 2420 Z	31	TAM 2420	35	24	31	20	3.4		24	23.987	31.014	30.989	17 000	29 200	16 000	IRT 2020
	TA 2428 Z	43.5	TAM 2428	47	24	31	28	3.4		24	23.987	31.014	30.989	24 500	46 700	16 000	IRT 2028
	TA 243216 Z	28	TAM 243216	32	24	32	16	3.4		24	23.987	32.014	31.989	14 200	20 500	16 000	IRT 2016
25	TA 2510 Z	19.1	TAM 2510	23	25	33	10	3.4		25	24.987	33.014	32.989	7 990	9 900	15 000	IRT 2010-1
	TA 2515 Z	28.5	TAM 2515	32.5	25	33	15	3.4		25	24.987	33.014	32.989	13 400	19 300	15 000	IRT 2015-1
	TA 2520 Z	36.5	TAM 2520	40.5	25	33	20	3.4		25	24.987	33.014	32.989	19 500	31 100	15 000	IRT 2020-1
	TA 2525 Z	45.5	TAM 2525	49	25	33	25	3.4		25	24.987	33.014	32.989	24 100	40 800	15 000	IRT 2025-1
	TA 2530 Z	54.5	TAM 2530	58.5	25	33	30	3.4		25	24.987	33.014	32.989	29 100	52 000	15 000	IRT 2030-1
26	TA 2616 Z	30.5	TAM 2616	34.5	26	34	16	3.4		26	25.987	34.014	33.989	15 200	22 900	15 000	IRT 2216
	TA 2620 Z	38	TAM 2620	42.5	26	34	20	3.4		26	25.987	34.014	33.989	20 100	32 800	15 000	IRT 2220
28	TA 2820 Z	45	TAM 2820	50	28	37	20	3.4		28	27.987	37.014	36.989	21 200	32 300	13 000	IRT 2220-1
	TA 2830 Z	67.5	TAM 2830	72.5	28	37	30	3.4		28	27.987	37.014	36.989	33 000	56 900	13 000	IRT 2230-1
29	TA 2930 Z	70	TAM 2930	75.5	29	38	30	3.4		29	28.987	38.014	37.989	34 200	60 300	13 000	IRT 2530
30	TA 3020 Z	54.5	TAM 3020	60	30	40	20	3.4		30	29.987	40.014	39.989	24 500	36 300	12 000	IRT 2520-1
	TA 3025 Z	68	TAM 3025	73.5	30	40	25	3.4		30	29.987	40.014	39.989	31 600	50 300	12 000	IRT 2525-1
	TA 3030 Z	80	TAM 3030	85.5	30	40	30	3.4		30	29.987	40.014	39.989	36 700	60 700	12 000	IRT 2530-1
32	TA 3220 Z	57.5	TAM 3220	63.5	32	42	20	3.4		32	31.984	42.014	41.989	25 400	38 600	11 000	IRT 2820
	TA 3230 Z	86	TAM 3230	97.5	32	42	30	3.4		32	31.984	42.014	41.989	39 500	68 400	11 000	IRT 2830
35	TA 3512 Z	38.5	TAM 3512	46	35	45	12	3.4		35	34.984	45.014	44.989	14 800	19 900	10 000	IRT 3012
	TA 3515 Z	48	TAM 3515	56	35	45	15	3.4		35	34.984	45.014	44.989	18 500	26 500	10 000	IRT 3015
	TA 3520 Z	62.5	TAM 3520	70	35	45	20	3.4		35	34.984	45.014	44.989	27 000	43 100	10 000	IRT 3020
	TA 3525 Z	78	TAM 3525	85.5	35	45	25	3.4		35	34.984	45.014	44.989	34 800	59 700	10 000	IRT 3025
	TA 3530 Z	97	TAM 3530	105	35	45	30	3.4		35	34.984	45.014	44.989	40 600	72 600	10 000	IRT 3030
37	TA 3720 Z	64.5	TAM 3720	73	37	47	20	3.4		37	36.984	47.014	46.989	27 800	45 400	9 500	IRT 3220
38	TA 3820 Z	65.5	TAM 3820	74.5	38	48	20	3.4		38	37.984	48.014	47.989	27 700	45 600	9 000	IRT 3220-1
	TA 3830 Z	104	TAM 3830	114	38	48	30	3.4		38	37.984	48.014	47.989	43 100	80 600	9 000	IRT 3230-1

Note. (1) Allowable rotational speed applied to oil lubrication. For grease lubrication, a maximum of 60% of this value is allowable.

Every effort has been taken to ensure that the data listed in this catalogue is correct.
Finer Power Transmissions P/L will not accept liability for any damage or loss caused as a result of the data in this catalogue.

Every effort has been taken to ensure that the data listed in this catalogue is correct.
Finer Power Transmissions P/L will not accept liability for any damage or loss caused as a result of the data in this catalogue.

JAPANESE BEARINGS
Finer Power Transmissions P/L | www.finerpt.com

Needle Roller Bearings
Shell Type - Metric

TA Heavy Duty Series

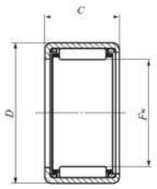

TA···Z TLA···Z

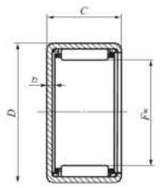

TAM TLAM

TA Heavy Duty Series

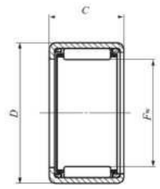

TA···Z TLA···Z

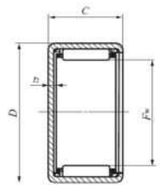

TAM TLAM

Shaft dia. mm	Identification number				Boundary dimensions (mm)					Standard mounting dimensions (mm)				Basic dynamic load rating C	Basic static load rating C0	Allowable rotational speed (1)	Assembled inner ring
										Shaft dia. h6		Housing bore dia J7					
												J7					
	Standard	Mass g	Closed end	Mass g	Fw	D	C	t2 Max.		Max	Min.	Max.	Min.	N	N	rpm	
40	TA 4015 Z	54	TAM 4015	63.5	40	50	15	3.4		40	39.984	50.014	49.989	19 500	29 400	8 500	IRT 3515
	TA 4020 Z	69.5	TAM 4020	79	40	50	20	3.4		40	39.984	50.014	49.989	28 400	47 800	8 500	IRT 3520
	TA 4025 Z	86.5	TAM 4025	102	40	50	25	3.4		40	39.984	50.014	49.989	36 600	66 200	8 500	IRT 3525
	TA 4030 Z	110	TAM 4030	120	40	50	30	3.4		40	39.984	50.014	49.989	44 300	84 600	8 500	IRT 3530
	TA 4040 Z	144	TAM 4040	154	40	50	40	3.4		40	39.984	50.014	49.989	56 700	116 000	8 500	IRT 3540
45	TA 4520 Z	77	TAM 4520	90	45	55	20	3.4		45	44.984	55.018	54.988	30 600	54 600	7 500	IRT 4020
	TA 4525 Z	102	TAM 4525	115	45	55	25	3.4		45	44.984	55.018	54.988	39 400	75 600	7 500	IRT 4025
	TA 4530 Z	122	TAM 4530	135	45	55	30	3.4		45	44.984	55.018	54.988	47 700	96 600	7 500	IRT 4030
	TA 4540 Z	161	TAM 4540	174	45	55	40	3.4		45	44.984	55.018	54.988	61 300	133 000	7 500	IRT 4040
50	TA 5020 Z	107	TAM 5020	123	50	62	20	3.4		50	49.984	62.018	61.988	38 000	64 000	6 500	IRT 4520
	TA 5025 Z	134	TAM 5025	150	50	62	25	3.4		50	49.984	62.018	61.988	49 100	89 000	6 500	IRT 4525
	TA 5030 Z	161	TAM 5030	178	50	62	30	3.4		50	49.984	62.018	61.988	59 500	114 000	6 500	IRT 4530
	TA 5040 Z	210	TAM 5040	230	50	62	40	3.4		50	49.984	62.018	61.988	76 500	157 000	6 500	IRT 4540
55	TA 5520 Z	116	TAM 5520	136	55	67	20	3.4		55	54.981	67.018	66.988	39 600	69 700	5 500	IRT 5020-1
	TA 5525 Z	145	TAM 5525	165	55	67	25	3.4		55	54.981	67.018	66.988	51 200	97 000	5 500	IRT 5025-1
	TA 5530 Z	175	TAM 5530	195	55	67	30	3.4		55	54.981	67.018	66.988	62 000	124 000	5 500	IRT 5030-1

Note. (1) Allowable rotational speed applied to oil lubrication. For grease lubrication, a maximum of 60% of this value is allowable.

Every effort has been taken to ensure that the data listed in this catalogue is correct.
Finer Power Transmissions P/L will not accept liability for any damage or loss caused as a result of the data in this catalogue.

Every effort has been taken to ensure that the data listed in this catalogue is correct.
Finer Power Transmissions P/L will not accept liability for any damage or loss caused as a result of the data in this catalogue.

IRT Inner Ring Series

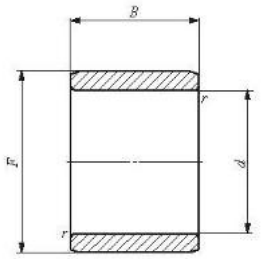

IRT

Shaft dia. mm	Identification number	Mass (Ref.)	Boundary dimensions mm				Standard mounting dimension mm		Assembled bearings		
							da		TA...Z	TLA...Z	YT*
		g	d	F	B	rs min	Min.	Max.	(TAM)	(TLAM)	YTL*
7	IRT 710	3.2	7	10	10.5	0.3	9	9.7	TA 1010Z	TLA 1010Z	-
	IRT 712	3.9	7	10	12.5	0.3	9	9.7	TA 1012Z	TLA 1012Z	-
	IRT 715	4.8	7	10	15.5	0.3	9	9.7	TA 1015Z	TLA 1015Z	-
8	IRT 810	5.1	8	12	10.5	0.3	10	11	-	TLA 1210Z	YTL 1210
	IRT 812	6	8	12	12.5	0.3	10	11	TA 1212Z	TLA 1212Z	YT 1212
	IRT 815	7.5	8	12	15.5	0.3	10	11	TA 1215Z	-	-
10	IRT 1012	5.2	10	13	12.5	0.3	12	12.7	-	TLA 1312Z	-
	IRT 1020-2	11.9	10	14	20.5	0.3	12	13	TA 1420Z	-	-
	IRT 1010-1	7.9	10	15	10.5	0.3	12	14	TA 1510Z	-	-
	IRT 1012-1	9.4	10	15	12.5	0.3	12	14	TA 1512Z	TLA 1512Z	-
	IRT 1015-1	11.7	10	15	15.5	0.3	12	14	TA 1515Z	-	-
	IRT 1012-2	7.2	10	14	12.5	0.3	12	13	-	TLA 1412Z	-
	IRT 1016-2	9.6	10	14	16.5	0.3	12	13	TA 1416Z	TLA 1416Z	-
	IRT 1025-1	19.3	10	15	25.5	0.3	12	14	TA 1525Z	-	-
12	IRT 1212	6.1	12	15	12.5	0.3	14	14.5	TA 1512Z	TLA 1512Z	-
	IRT 1216	8.1	12	15	16.5	0.3	14	14.5	-	TLA 1516Z	-
	IRT 1222	11	12	15	22.5	0.3	14	14.5	-	TLA 1522Z	-
	IRT 1212-1	8.5	12	16	12.5	0.3	14	15	-	TLA 1612Z	-
	IRT 1216-1	11.2	12	16	16.5	0.3	14	15	TA 1616Z	TLA 1616Z	-
	IRT 1220-1	13.9	12	16	20.5	0.3	14	15	TA 1620Z	-	-
	IRT 1222-1	15.2	12	16	22.5	0.3	14	15	-	TLA 1622Z	-
	IRT 1215-2	13.6	12	17	15.5	0.3	14	16	TA 1715Z	-	YT 1715
	IRT 1220-2	18	12	17	20.5	0.3	14	16	TA 1720Z	-	-
	IRT 1225-2	22.5	12	17	25.5	0.3	14	16	TA 1725Z	-	YT 1725

Every effort has been taken to ensure that the data listed in this catalogue is correct.
Finer Power Transmissions P/L will not accept liability for any damage or loss caused as a result of the data in this catalogue.

IRT Inner Ring Series

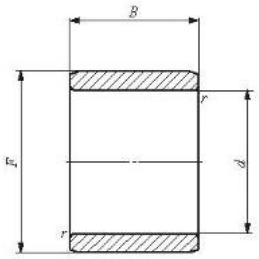

IRT

Shaft dia. mm	Identification number	Mass (Ref.)	Boundary dimensions mm				Standard mounting dimension mm		Assembled bearings		
							da		TA...Z	TLA...Z	YT*
		g	d	F	B	rs min	Min.	Max.	(TAM)	(TLAM)	YTL*
15	IRT 1512	7.5	15	18	12.5	0.3	17	17.5	-	TLA 1812Z	-
	IRT 1515	9.3	15	18	15.5	0.3	17	17.5	TA 1815Z	-	-
	IRT 1516	9.9	15	18	16.5	0.3	17	17.5	-	TLA 1816Z	-
	IRT 1520	12.3	15	18	20.5	0.3	17	17.5	TA 1820Z	-	-
	IRT 1525	15.2	15	18	25.5	0.3	17	17.5	TA 1825Z	-	-
	IRT 1516-1	13.6	15	19	16.5	0.3	17	18	TA 1916Z	-	-
	IRT 1520-1	16.8	15	19	20.5	0.3	17	18	TA 1920Z	-	-
	IRT 1515-2	16.4	15	20	15.5	0.3	17	19	TA 2015Z	-	YT 2015
	IRT 1520-2	21.5	15	20	20.5	0.3	17	19	TA 2020Z	TLA 2020Z	YT 202820
	IRT 1525-2	27	15	20	25.5	0.3	17	19	TA 2025Z	-	YT 2025
	IRT 1530-2	32	15	20	30.5	0.3	17	19	TA 2030Z	TLA 2030Z	-
17	IRT 1716	11.1	17	20	16.5	0.3	19	19.5	-	TLA 2016Z	-
	IRT 1720	13.7	17	20	20.5	0.3	19	19.5	TA 2020Z	TLA 2020Z	YT 202820
	IRT 1730	20.5	17	20	30.5	0.3	19	19.5	TA 2030Z	TLA 2030Z	-
	IRT 1716-1	15.1	17	21	16.5	0.3	19	20	TA 2116Z	-	YT 2116
	IRT 1720-1	18.8	17	21	20.5	0.3	19	20	TA 2120Z	-	YT 2120
	IRT 1710-2	12.4	17	22	10.5	0.3	19	21	TA 2210Z	-	-
	IRT 1716-2	19.4	17	22	16.5	0.3	19	21	TA 223016Z	TLA 2216Z	YT 223016
	IRT 1720-2	24	17	22	20.5	0.3	19	21	TA 2220Z	TLA 2220Z	YT 223020
	IRT 1725-2	30	17	22	25.5	0.3	19	21	TA 2225Z	-	-
	IRT 1730-2	36	17	22	30.5	0.3	19	21	TA 2230Z	-	-
20	IRT 2016	17.5	20	24	16.5	0.3	22	23	TA 243216Z	-	YT 243216
	IRT 2020	22	20	24	20.5	0.3	22	23	TA 2420Z	-	YT 243220
	IRT 2028	30.5	20	24	28.5	0.3	22	23	TA 2428Z	-	YT 2428
	IRT 2010-1	14.3	20	25	10.5	0.3	22	24	TA 2510Z	-	YT 2510
	IRT 2015-1	21	20	25	15.5	0.3	22	24	TA 2515Z	-	YT 2515
	IRT 2020-1	28	20	25	20.5	0.3	22	24	TA 2520Z	TLA 2520Z	YT 2520
	IRT 2025-1	34.5	20	25	25.5	0.3	22	24	TA 2525Z	-	YT 2525
	IRT 2026-1	36	20	25	26.5	0.3	22	24	-	TLA 2526Z	YTL 2526
	IRT 2030-1	41.5	20	25	30.5	0.3	22	24	TA 2530Z	-	-
	IRT 2038-1	52.5	20	25	38.5	0.3	22	24	-	TLAW 2538Z	-
22	IRT 2220	24	22	26	20.5	0.3	24	25	TA 2620Z	-	YT 2620
	IRT 2220-1	37	22	28	20.5	0.3	24	27	TA 2820Z	TLA 2820Z	YT 2820
	IRT 2230-1	55.5	22	28	30.5	0.3	24	27	TA 2830Z	-	-
25	IRT 2515-1	25.5	25	30	15.5	0.3	27	29	TA 3015Z	-	-
	IRT 2520-1	34	25	30	20.5	0.3	27	29	TA 3020Z	TLA 3020Z	-
	IRT 2526-1	44	25	30	26.5	0.3	27	29	-	TLA 3026Z	-
	IRT 2530-1	50.5	25	30	30.5	0.3	27	29	TA 3030Z	-	-
	IRT 2538-1	64	25	30	38.5	0.3	27	29	-	TLAW 3038Z	-
28	IRT 2820	29.5	28	32	20.5	0.3	30	31	TA 3220Z	-	YT 3220
	IRT 2830	44	28	32	30.5	0.3	30	31	TA 3230Z	-	-

Every effort has been taken to ensure that the data listed in this catalogue is correct.
Finer Power Transmissions P/L will not accept liability for any damage or loss caused as a result of the data in this catalogue.

IRT Inner Ring Series

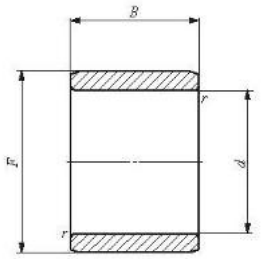

IRT

Shaft dia. mm	Identification number	Mass (Ref.)	Boundary dimensions mm				Standard mounting dimension mm		Assembled bearings		
							da		TA...Z	TLA...Z	YT*
		g	d	F	B	rs min	Min.	Max.	(TAM)	(TLAM)	YTL*
30	IRT 3012	24.5	30	35	12.5	0.6	34	34.5	TA 3512Z	TLA 3512Z	-
	IRT 3015	30.5	30	35	15.5	0.6	34	34.5	TA 3515Z	-	-
	IRT 3020	40	30	35	20.5	0.6	34	34.5	TA 3520Z	TLA 3520Z	-
	IRT 3025	50	30	35	25.5	0.6	34	34.5	TA 3525Z	-	-
	IRT 3030	60	30	35	30.5	0.6	34	34.5	TA 3530Z	-	-
32	IRT 3220	42.5	32	37	20.5	0.6	36	36.5	TA 3720Z	-	YT 3720
	IRT 3230	63.5	32	37	30.5	0.6	36	36.5	TA 3730Z	-	-
	IRT 3215-1	39.5	32	38	15.5	0.6	36	37	TA 3815Z	-	-
	IRT 3220-1	52	32	38	20.5	0.6	36	37	TA 3820Z	-	-
	IRT 3225-1	64.5	32	38	25.5	0.6	36	37	TA 3825Z	-	-
	IRT 3230-1	77.5	32	38	30.5	0.6	36	37	TA 3830Z	-	-
35	IRT 3515	35	35	40	15.5	0.6	39	39.5	TA 4015Z	-	YT 4015
	IRT 3520	46.5	35	40	20.5	0.6	39	39.5	TA 4020Z	TLA 4020Z	-
	IRT 3525	58	35	40	25.5	0.6	39	39.5	TA 4025Z	-	YT 4025
	IRT 3530	69	35	40	30.5	0.6	39	39.5	TA 4030Z	-	-
	IRT 3540	91.5	35	40	40.5	0.6	39	39.5	TA 4040Z	-	-
40	IRT 4020	52.5	40	45	20.5	0.6	44	45.5	TA 4520Z	TLA 4520Z	YT 4520
	IRT 4025	65.5	40	45	25.5	0.6	44	45.5	TA 4525Z	-	YT 4525
	IRT 4030	78.5	40	45	30.5	0.6	44	45.5	TA 4530Z	-	-
	IRT 4040	104	40	45	40.5	0.6	44	45.5	TA 4540Z	-	-
45	IRT 4512	36	45	50	12.5	0.6	49	49.5	TA 5012Z	-	-
	IRT 4515	44.5	45	50	15.5	0.6	49	49.5	TA 5015Z	-	-
	IRT 4520	59	45	50	20.5	0.6	49	49.5	TA 5020Z	TLA 5020Z	-
	IRT 4525	73	45	50	25.5	0.6	49	49.5	TA 5025Z	TLA 5025Z	-
	IRT 4530	87.5	45	50	30.5	0.6	49	49.5	TA 5030Z	-	-
	IRT 4540	116	45	50	40.5	0.6	49	49.5	TA 5040Z	-	-
	IRT 4545	131	45	50	45.5	0.6	49	49.5	TAW 5045Z	-	-
50	IRT 5020-1	65	50	55	20.5	0.6	54	54.5	TA 5520Z	TLA 5520Z	-
	IRT 5025-1	81	50	55	25.5	0.6	54	54.5	TA 5525Z	TLA 5525Z	-
	IRT 5030-1	96.5	50	55	30.5	0.6	54	54.5	TA 5530Z	-	-
	IRT 5040-1	128	50	55	40.5	0.6	54	54.5	TA 5540Z	-	-
	IRT 5045-1	144	50	55	45.5	0.6	54	54.5	TAW 5545Z	-	-
	IRT 5050-1	160	50	55	50.5	0.6	54	54.5	TAW 5550Z	-	-
	IRT 5025	169	50	60	25.5	1.5	58	59	TA 6025Z	-	-
	IRT 5030	205	50	60	30.5	1.5	58	59	TA 6030Z	-	-
	IRT 5040	270	50	60	40.5	1.5	58	59	TA 6040Z	-	-
	IRT 5045	300	50	60	45.5	1.5	58	59	TAW 6045Z	-	-
	IRT 5050	335	50	60	50.5	1.5	58	59	TAW 6050Z	-	-
52	IRT 5212	86	52	62	12.5	1.5	60	60.5	TA 6212Z	-	-
55	IRT 5525	185	55	65	25.5	1.5	63	63.5	TA 6525Z	-	-
	IRT 5530	220	55	65	30.5	1.5	63	63.5	TA 6530Z	-	-
	IRT 5545	330	55	65	45.5	1.5	63	63.5	TAW 6545Z	-	-
	IRT 5550	365	55	65	50.5	1.5	63	63.5	TAW 6550Z	-	-

* Not a stocked range although available on request.

Every effort has been taken to ensure that the data listed in this catalogue is correct.
Finer Power Transmissions P/L will not accept liability for any damage or loss caused as a result of the data in this catalogue.

IRT Inner Ring Series

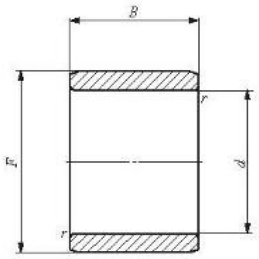

IRT

Shaft dia. mm	Identification number	Mass (Ref.)	Boundary dimensions mm				Standard mounting dimension mm		Assembled bearings		
							da		TA...Z	TLA...Z	YT*
		g	d	F	B	rs min	Min.	Max.	(TAM)	(TLAM)	YTL*
60	IRT 6025	200	60	70	25.5	1.5	68	68.5	TA 7025Z	-	-
	IRT 6030	240	60	70	30.5	1.5	68	68.5	TA 7030Z	-	-
	IRT 6040	320	60	70	40.5	1.5	68	68.5	TA 7040Z	-	-
	IRT 6050	395	60	70	50.5	1.5	68	68.5	TAW 7050Z	-	-

* Not a stocked range although available on request.

Every effort has been taken to ensure that the data listed in this catalogue is correct.
Finer Power Transmissions P/L will not accept liability for any damage or loss caused as a result of the data in this catalogue.

IRB Inner Ring Series

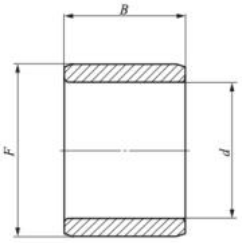

IRB

Shaft dia. mm inch	Identification number	Mass (Ref.)	Boundary dimensions mm (inch)			Standard mounting dimension mm			Assembled bearings		
						da		ras max	BA...Z	BHA...Z	YB*
		g	d	F	B	Min.	Max.	Max.	(BAM)	(BHAM)	YBH*
7.938 5/16	IRB 58	8	7.938 (5/16)	12.700 (1/2)	13.08	11.3	11.7	0.3	BA 88Z	BHA 88Z	YB 88
9.525 3/8	IRB 68	8.9	9.525 (3/8)	14.288 (9/16)	13.08	12.8	13.2	0.3	BA 98Z	BHA 98Z	YB 98
	IRB 68-1	12.6	9.525 (3/8)	15.875 (5/8)	13.08	12.8	14	0.3	BA 108Z	BHA 108Z	YB 108
	IRB 612	13.2	9.525 (3/8)	14.288 (9/16)	19.43	12.8	13.2	0.3	BA 912Z	-	YB 912
11.112 7/16	IRB 78	10.1	11.112 (7/16)	15.875 (5/8)	13.08	14.4	14.8	0.3	BA 108Z	BHA 108Z	YB 108
	IRB 712	15	11.112 (7/16)	15.875 (5/8)	19.43	14.4	14.8	0.3	BA 1012Z	-	YB 1012
	IRB 716	19.9	11.112 (7/16)	15.875 (5/8)	25.78	14.4	14.8	0.3	BA 1016Z	-	-
12.700 1/2	IRB 86	8.5	12.700 (1/2)	17.462 (11/16)	9.9	16.9	16.9	0.3	BA 116Z	-	-
	IRB 88	11.2	12.700 (1/2)	17.462 (11/16)	13.08	16.9	16.9	0.3	BA 118Z	-	-
	IRB 812	16.7	12.700 (1/2)	17.462 (11/16)	19.43	16.9	16.9	0.3	BA 1112Z	-	YB 1112
	IRB 88-1	15.8	12.700 (1/2)	19.050 (3/4)	13.08	16.9	17.5	0.6	BA 128Z	-	YB 128
	IRB 810-1	19.6	12.700 (1/2)	19.050 (3/4)	16.25	16.9	17.5	0.6	BA 1210Z	-	YB 1210
	IRB 812-1	23.5	12.700 (1/2)	19.050 (3/4)	19.43	16.9	17.5	0.6	BA 1212Z	-	YB 1212
	IRB 814-1	27.5	12.700 (1/2)	19.050 (3/4)	22.6	16.9	17.5	0.6	BA 1214Z	-	-
	IRB 816-1	31	12.700 (1/2)	19.050 (3/4)	25.78	16.9	17.5	0.6	BA 1216Z	-	-
14.288 9/16	IRB 910	21.5	14.288 (9/16)	20.638 (13/16)	16.25	19	19.6	0.6	BA 1310Z	-	YBH 1310
	IRB 912	26	14.288 (9/16)	20.638 (13/16)	19.43	19	19.6	0.6	BA 1312Z	BHA 1312Z	YBH 1312
	IRB 914	30	14.288 (9/16)	20.638 (13/16)	22.6	19	19.6	0.6	BA 1314Z	-	-
	IRB 916	34.5	14.288 (9/16)	20.638 (13/16)	25.78	19	19.6	0.6	BA 1316Z	-	-
15.875 5/8	IRB 108	18.9	15.875 (5/8)	22.225 (7/8)	13.08	20.7	21.2	0.6	BA 148Z	-	YB 148
	IRB 1012	28	15.875 (5/8)	22.225 (7/8)	19.43	20.7	21.2	0.6	BA 1412Z	BHA 1412Z	YB 1412
	IRB 1014	33	15.875 (5/8)	22.225 (7/8)	22.6	20.7	21.2	0.6	BA 1414Z	-	-
	IRB 1016	37.5	15.875 (5/8)	22.225 (7/8)	25.78	20.7	21.2	0.6	BA 1416Z	BHA 1416Z	YB 1416
	IRB 1022	51.5	15.875 (5/8)	22.225 (7/8)	35.3	20.7	21.2	0.6	BA 1422Z	-	-
17.46 (11/6)	IRB 1110	25.5	17.462 (11/16)	23.812 (15/16)	16.25	22.3	22.8	0.6	BA 1510Z	-	-
	IRB 1116	40.5	17.462 (11/16)	23.812 (15/16)	25.78	22.3	22.8	0.6	BA 1516Z	-	YB 168 YBH 168
19.050 3/4	IRB 128	22	19.050 (3/4)	25.400 (1)	13.08	23.9	24.4	0.6	BA 168Z	BHA 168Z	YB 1612 YBH 1612
	IRB 1212	33	19.050 (3/4)	25.400 (1)	19.43	23.9	24.4	0.6	BA 1612Z	BHA 1612Z	-
	IRB 1214	38.5	19.050 (3/4)	25.400 (1)	22.6	23.9	24.4	0.6	BA 1614Z	-	YB 1616
	IRB 1216	43.5	19.050 (3/4)	25.400 (1)	25.78	23.9	24.4	0.6	BA 1616Z	BHA 1616Z	YBH 1616
	IRB 1220	54.5	19.050 (3/4)	25.400 (1)	32.13	23.9	24.4	0.6	BA 1620Z	-	-
20.638 13/16	IRB 1316	34	20.638 (13/16)	25.400 1	25.78	24.9	24.9	0.6	BA 1616Z	BHA 1616Z	YB 1616 YBH 1616
22.225 7/8	IRB 148	25	22.225 (7/8)	28.575 (1 1/8)	13.08	27	27.5	0.6	BA 188Z	-	YB 188
	IRB 1412	37.5	22.225 (7/8)	28.575 (1 1/8)	19.43	27	27.5	0.6	BA 1812Z	BHA 1812Z	YB 1812
	IRB 1416	50	22.225 (7/8)	28.575 (1 1/8)	25.78	27	27.5	0.6	BA 1816Z	BHA 1816Z	YB 1816
	IRB 1420	62.5	22.225 (7/8)	28.575 (1 1/8)	32.13	27	27.5	0.6	BA 1820Z	BHA 1820Z	-

* Not a stocked range although available on request.

Every effort has been taken to ensure that the data listed in this catalogue is correct.
Finer Power Transmissions P/L will not accept liability for any damage or loss caused as a result of the data in this catalogue.

IRB Inner Ring Series

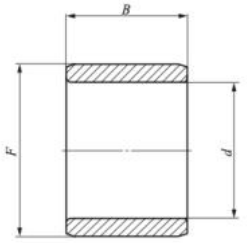

IRB

Shaft dia. mm inch	Identification number	Mass (Ref.)	Boundary dimensions mm (inch)			Standard mounting dimension mm			Assembled bearings		
						da		ras max	BA...Z	BHA...Z	YB*
		g	d	F	B	Min.	Max.	Max.	(BAM)	(BHAM)	YBH*
25.400 1	IRB 168	28.5	25.400 (1)	31.750 (1 1/ 4)	13.08	30	30.7	0.6	BA 208Z	-	-
	IRB 1610	35.5	25.400 (1)	31.750 (1 1/ 4)	16.25	30	30.7	0.6	BA 2010Z	-	YB 2010
	IRB 1612	42.5	25.400 (1)	31.750 (1 1/ 4)	19.43	30	30.7	0.6	BA 2012Z	-	YB 2012
	IRB 1616	56	25.400 (1)	31.750 (1 1/ 4)	25.78	30	30.7	0.6	BA 2016Z	BHA 2016Z	YB 2016
	IRB 1620	70	25.400 (1)	31.750 (1 1/ 4)	32.13	30	30.7	0.6	BA 2020Z	-	-
	IRB 168-1	36.5	25.400 (1)	33.338 (1 5/16)	13.08	30	32.1	0.6	BA 218Z	-	-
	IRB 1610-1	45.5	25.400 (1)	33.338 (1 5/16)	16.25	30	32.1	0.6	BA 2110Z	-	-
	IRB 1612-1	54.5	25.400 (1)	33.338 (1 5/16)	19.43	30	32.1	0.6	BA 2112Z	-	-
28.575 1 1/8	IRB 1812	47	28.575 (1 1/ 8)	34.925 (1 3/ 8)	19.43	33.2	33.9	0.6	BA 2212Z	BHA 2212Z	YB 2212
	IRB 1816	62.5	28.575 (1 1/ 8)	34.925 (1 3/ 8)	25.78	33.2	33.9	0.6	BA 2216Z	BHA 2216Z	-
	IRB 1820	78	28.575 (1 1/ 8)	34.925 (1 3/ 8)	32.13	33.2	33.9	0.6	BA 2220Z	-	YB 2220
31.750 1 1/4	IRB 2010	43	31.750 (1 1/4)	38.100 (1 1/2)	16.25	37	37.1	0.6	BA 2410Z	-	-
	IRB 2014	60	31.750 (1 1/4)	38.100 (1 1/2)	22.6	37	37.1	0.6	BA 2414Z	-	YB 2414
	IRB 2016	68.5	31.750 (1 1/4)	38.100 (1 1/2)	25.78	37	37.1	0.6	BA 2416Z	-	YB 2416
	IRB 2020	85.5	31.750 (1 1/4)	38.100 (1 1/2)	32.13	37	37.1	0.6	BA 2420Z	-	YB 2420
34.925 1 3/8	IRB 2210	47	34.925 (1 3/ 8)	41.275 (1 5/ 8)	16.25	40.2	40.2	0.6	BA 2610Z	-	YB 2610
	IRB 2220	93.5	34.925 (1 3/ 8)	41.275 (1 5/ 8)	32.13	40.2	40.2	0.6	BA 2620Z	-	-
38.100 1 1/2	IRB 2416	81	38.100 (1 1/ 2)	44.450 (1 3/ 4)	25.78	43.3	43.4	0.6	BA 2816Z	-	YB 2816
	IRB 2424	121	38.100 (1 1/2)	44.450 (1 3/ 4)	38.48	43.3	43.4	0.6	BA 2824Z	BHA 2824Z	-
41.275 1 5/8	IRB 2616	136	41.275 (1 5/ 8)	50.800 (2)	25.78	47.5	48.5	1	BA 3216Z	-	-
	IRB 2628	235	41.275 (1 5/ 8)	50.800 (2)	44.83	47.5	48.5	1	BAW 3228Z	-	-
47.625 1 7/8	IRB 3024	149	47.625 (1 7/ 8)	53.975 (2 1/ 8)	38.48	52.9	52.9	0.6	BA 3424Z	-	-

* Not a stocked range although available on request.

Every effort has been taken to ensure that the data listed in this catalogue is correct.
Finer Power Transmissions P/L will not accept liability for any damage or loss caused as a result of the data in this catalogue.

JAPANESE BEARINGS
Finer Power Transmissions P/L | www.finerpt.com

Needle Roller Bearings
Shell Type - Imperial

BA Series w/Oil Hole

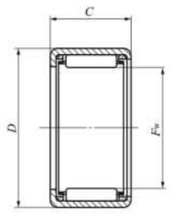

BA···Z BHA···Z

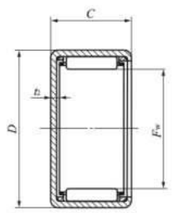

BAM BHAM

BA Series w/Oil Hole

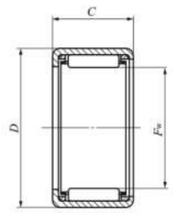

BA···Z BHA···Z

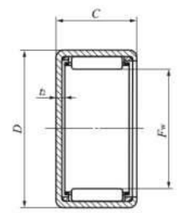

BAM BHAM

Shaft dia. mm (in)	Identification number				Boundary dimensions (mm) (inch)					Standard mounting dimensions (mm)				Basic dynamic load rating C	Basic static load rating C0	Allowable rotational speed (1)	Assembled inner ring
										Shaft dia. h6		J7					
	Standard	Mass g	Closed end*	Mass g	Fw	D	C	t2 Max.		Max	Min.	Max.	Min.	N	N	rpm	
6.350 (1/4)	BA 44	2.1	-	-	6.350 (1/4)	11.112 (7/16)	6.35(1/4)	1		6.35	6.341	11.122	11.104	1 770	1 390	55 000	-
	BA 45 Z	2.5	BAM 45	2.7	6.350 (1/4)	11.112 (7/16)	7.92 (1/32)	1		6.35	6.341	11.122	11.104	1 510	1 120	55 000	-
7.938 (5/16)	BA 57 Z	4.3	BAM 57	4.6	7.938 (5/16)	12.700 (1/ 2)	11.13 (7/16)	1		7.938	7.929	12.71	12.692	3 310	3 220	45 000	-
	BA 59 Z	5.4	BAM 59	5.7	7.938 (5/16)	12.700 (1/ 2)	14.27 (9/16)	1		7.938	7.929	12.71	12.692	4 190	4 360	45 000	-
9.525 (3/8)	BA 610 Z	7	BAM 610	7.4	9.525 (3/8)	14.288 (9/16)	15.88 (5/8)	1		9.525	9.516	14.298	14.28	5 660	6 700	40 000	-
	BA 66 Z	4.2	BAM 66	4.6	9.525 (3/8)	14.288 (9/16)	9.52 (3/8)	1		9.525	9.516	14.298	14.28	3 090	3 080	40 000	-
	BA 68 Z	5.7	BAM 68	6.1	9.525 (3/8)	14.288 (9/16)	12.70 (1/2)	1		9.525	9.516	14.298	14.28	4 190	4 560	40 000	-
11.112 (7/16)	BA 77 Z	5.6	BAM 77	6.2	11.112 (7/16)	15.875 (5/ 8)	11.13 (7/16)	1		11.112	11.101	15.885	15.867	4 150	4 680	35 000	-
	BA 78 Z	6.4	BAM 78	7	11.112 (7/16)	15.875 (5/ 8)	12.70 (1/2)	1		11.112	11.101	15.885	15.867	4 460	5 130	35 000	-
	BA 710 Z	7.9	BAM 710	8.5	11.112 (7/16)	15.875 (5/ 8)	15.88 (5/8)	1		11.112	11.101	15.885	15.867	6 020	7 550	35 000	-
12.700 (1/2)	BA 88 Z	7.2	BAM 88	7.9	12.700 (1/2)	17.462 (11/16)	12.70 (1/2)	1		12.7	12.689	17.472	17.454	4 710	5 700	30 000	IRB 58
	BA 810 Z	8.9	BAM 810	9.6	12.700 (1/2)	17.462 (11/16)	15.88 (5/8)	1		12.7	12.689	17.472	17.454	6 350	8 380	30 000	-
	BA 812 Z	10.6	BAM 812	11.3	12.700 (1/2)	17.462 (11/16)	19.05 (3/4)	1		12.7	12.689	17.472	17.454	7 840	11 000	30 000	-
14.288 (9/16)	BA 910 Z	9.9	BAM 910	10.8	14.288 (9/16)	19.05 (3/4)	15.88 (5/8)	1.3		14.288	14.277	19.062	19.041	7 050	9 910	30 000	-
	BA 912 Z	11.7	BAM 912	12.6	14.288 (9/16)	19.05 (3/4)	19.05 (3/4)	1.3		14.288	14.277	19.062	19.041	8 690	13 000	30 000	IRB 612
15.875 (5/8)	BA 1010 Z	10.8	BAM 1010	12	15.875 (5/8)	20.638 (13/16)	15.88 (5/8)	1.3		15.875	15.864	20.65	20.629	9 020	14 100	25 000	IRB 612-1
	BA 1012 Z	12.9	BAM 1012	14	15.875 (5/8)	20.638 (13/16)	19.05 (3/4)	1.3		15.875	15.864	20.65	20.629	10 700	17 500	25 000	IRB 714
	BA 1014 Z	15.1	BAM 1014	16.2	15.875 (5/8)	20.638 (13/16)	22.22 (7/8)	1.3		15.875	15.864	20.65	20.629	12 300	20 800	25 000	IRB 716
	BA 1016 Z	17.3	BAM 1016	18.4	15.875 (5/8)	20.638 (13/16)	25.4 (1)	1.3		15.875	15.864	20.65	20.629	7 580	12 200	9 500	-
	BA 105 Z	5.3	BAM 105	6.5	15.875 (5/8)	20.638 (13/16)	7.92 (5/16)	1.3		15.875	15.864	20.65	20.629	2 870	3 220	25 000	-
	BA 107 Z	7.6	BAM 107	8.7	15.875 (5/8)	20.638 (13/16)	11.13 (7/16)	1.3		15.875	15.864	20.65	20.629	5 040	6 660	25 000	-
	BA 108 Z	8.7	BAM 108	9.9	15.875 (5/8)	20.638 (13/16)	12.70 (1/2)	1.3		15.875	15.864	20.65	20.629	5 420	7 310	25 000	IRB 68-1
17.462 (11/16)	BA 1110 Z	11.8	BAM 1110	13.2	17.462 (11/16)	22.225 (7/ 8)	15.88 (5/8)	1.3		17.462	17.451	22.237	22.216	8 280	13 000	25 000	-
	BA 1112 Z	14	BAM 1112	15.4	17.462 (11/16)	22.225 (7/ 8)	19.05 (3/4)	1.3		17.462	17.451	22.237	22.216	10 200	17 000	25 000	IRB 812
19.050 (3/4)	BA 1212 Z	20.5	BAM 1212	22	19.050 (3/4)	25.400 (1)	19.05 (3/4)	1.3		19.05	19.037	25.412	25.391	11 900	17 700	20 000	IRB 812-1
	BA 1214 Z	23.5	BAM 1214	25	19.050 (3/4)	25.400 (1)	22.22 (7/8)	1.3		19.05	19.037	25.412	25.391	14 200	22 200	20 000	IRB 814-1
	BA 1216 Z	27	BAM 1216	28.5	19.050 (3/4)	25.400 (1)	25.40 (1)	1.3		19.05	19.037	25.412	25.391	16 300	26 500	20 000	IRB 816-1
	BA 126 Z	10	BAM 126	11.7	19.050 (3/4)	25.400 (1)	9.52 (3/8)	1.3		19.05	19.037	25.412	25.391	5 040	5 850	20 000	-
	BA 128 Z	13.5	BAM 128	15.2	19.050 (3/4)	25.400 (1)	12.70 (1/2)	1.3		19.05	19.037	25.412	25.391	6 910	8 780	20 000	IRB 88-1
20.638 (13/16)	BA 1314 Z	25	BAM 1314	27	20.638 (13/16)	26.988 1 (1/16)	22.22 (7/8)	1.3		20.638	20.625	27	26.979	14 700	23 800	19 000	IRB 914
	BA 1316 Z	28.5	BAM 1316	30.5	20.638 (13/16)	26.988 1 (1/16)	25.40 (1)	1.3		20.638	20.625	27	26.979	16 900	28 500	19 000	IRB 916

*Not a stocked range although available on request

Note. (1) Allowable rotational speed applied to oil lubrication. For grease lubrication, a maximum of 60% of this value is allowable.

Every effort has been taken to ensure that the data listed in this catalogue is correct.
Finer Power Transmissions P/L will not accept liability for any damage or loss caused as a result of the data in this catalogue.

Every effort has been taken to ensure that the data listed in this catalogue is correct.
Finer Power Transmissions P/L will not accept liability for any damage or loss caused as a result of the data in this catalogue.

JAPANESE BEARINGS
Finer Power Transmissions P/L | www.finerpt.com

Needle Roller Bearings
Shell Type - Imperial

BA Series w/Oil Hole

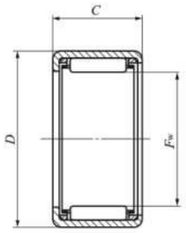

BA···Z BHA···Z

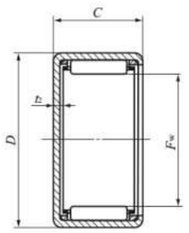

BAM BHAM

BA Series w/Oil Hole

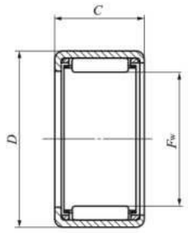

BA···Z BHA···Z

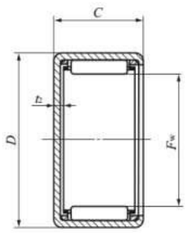

BAM BHAM

Shaft dia. mm (in)	Identification number				Boundary dimensions (mm) (inch)					Standard mounting dimensions (mm)				Basic dynamic load rating C	Basic static load rating C0	Allowable rotational speed (1)	Assembled inner ring
										Shaft dia. h6		J7					
	Standard	Mass g	Closed end*	Mass g	Fw	D	C	t2 Max.		Max	Min.	Max.	Min.	N	N	rpm	
22.225 (7/8)	BA 148 Z	15.6	BAM 148	17.8	22.225 (7/8)	28.575 (1 1/8)	12.70 (1/2)	2.8		22.225	22.212	28.587	28.566	7 440	10 100	18 000	IRB 108
	BA 1412 Z	23.5	BAM 1412	26	22.225 (7/8)	28.575 (1 1/8)	19.05 (3/4)	2.8		22.225	22.212	28.587	28.566	12 800	20 400	18 000	IRB 1012
25.4 (1)	BA 1612 Z	26.5	BAM 1612	29.5	25.400 (1)	31.750 (1 1/4)	19.05 (3/4)	2.8		25.4	25.387	31.764	31.739	14 200	24 300	15 000	IRB 1212
	BA 1614 Z	31	BAM 1614	33.5	25.400 (1)	31.750 (1 1/4)	22.22 (7/8)	2.8		25.4	25.387	31.764	31.739	16 900	30 400	15 000	IRB 1214
	BA 1616 Z	35.5	BAM 1616	38	25.400 (1)	31.750 (1 1/4)	25.40 (1)	2.8		25.4	25.387	31.764	31.739	19 400	36 300	15 000	IRB 1216
	BA 1620 Z	44	BAM 1620	46.5	25.400 (1)	31.750 (1 1/4)	31.75 (1 1/4)	2.8		25.4	25.387	31.764	31.739	24 400	48 500	15 000	IRB 1220
26.988 (1 1/16)	BA 1710 Z	23.5	BAM 1710	26.5	26.988 (1 1/16)	33.338 (1 5/16)	15.88 (5/8)	2.8		26.988	26.975	33.352	33.327	11 600	19 200	14 000	-
28.575 (1 1/8)	BA 188 Z	19.5	BAM 188	23	28.575 (1 1/8)	34.925 (1 3/8)	12.70 (1/2)	2.8		28.575	28.562	34.939	34.914	8 680	13 400	13 000	IRB 148
	BA 1812 Z	29.5	BAM 1812	33	28.575 (1 1/8)	34.925 (1 3/8)	19.05 (3/4)	2.8		28.575	28.562	34.939	34.914	15 000	26 900	13 000	IRB 1412
	BA 1816 Z	39	BAM 1816	42.5	28.575 (1 1/8)	34.925 (1 3/8)	25.40 (1)	2.8		28.575	28.562	34.939	34.914	20 500	40 300	13 000	IRB 1416
30.162 (1 3/16)	BA 1916 Z	52	BAM 1916	57	30.162 (1 3/16)	38.100 (1 1/2)	25.40 (1)	2.8		30.162	30.146	38.114	38.089	25 800	45 300	12 000	-
31.750 (1 1/4)	BA 2010 Z	27	BAM 2010	31.5	31.750 (1 1/4)	38.100 (1 1/2)	15.88 (5/8)	2.8		31.75	31.734	38.114	38.089	12 500	22 200	12 000	IRB 1610
	BA 2012 Z	32.5	BAM 2012	37	31.750 (1 1/4)	38.100 (1 1/2)	19.05 (3/4)	2.8		31.75	31.734	38.114	38.089	15 700	29 600	12 000	IRB 1612
	BA 2016 Z	43	BAM 2016	47.5	31.750 (1 1/4)	38.100 (1 1/2)	25.40 (1)	2.8		31.75	31.734	38.114	38.089	21 500	44 300	12 000	IRB 1616
	BA 2020 Z	53.5	BAM 2020	58	31.750 (1 1/4)	38.100 (1 1/2)	31.75 (1 1/4)	2.8		31.75	31.734	38.114	38.089	26 900	59 200	12 000	IRB 1620
33.338 (1 5/16)	BA 2110 Z	35.5	BAM 2110	41.5	33.338 (1 5/16)	41.275 (1 5/8)	15.88 (5/8)	2.8		33.338	33.322	41.289	41.264	15 400	23 900	11 000	IRB 1610-1
34.925 (1 3/8)	BA 228 Z	23.5	BAM 228	29	34.925 (1 3/8)	41.275 (1 5/8)	12.70 (1/2)	2.8		34.925	34.909	41.289	41.264	9 770	16 600	10 000	IRB 188
	BA 2212 Z	35.5	BAM 2212	41	34.925 (1 3/8)	41.275 (1 5/8)	19.05 (3/4)	2.8		34.925	34.909	41.289	41.264	16 900	33 500	10 000	IRB 1812
	BA 2216 Z	47.5	BAM 2216	53	34.925 (1 3/8)	41.275 (1 5/8)	25.40 (1)	2.8		34.925	34.909	41.289	41.264	23 100	50 200	10 000	IRB 1816
	BA 2220 Z	59	BAM 2220	64	34.925 (1 3/8)	41.275 (1 5/8)	31.75 (1 1/4)	2.8		34.925	34.909	41.289	41.264	28 900	67 100	10 000	IRB 1820
38.100 (1 1/2)	BA 248 Z	38.5	BAM 248	47.5	38.100 (1 1/2)	47.625 (1 7/8)	12.70 (1/2)	2.8		38.1	38.084	47.639	47.614	12 900	17 900	9 000	-
	BA 2414 Z	69	BAM 2414	78	38.100 (1 1/2)	47.625 (1 7/8)	22.22 (7/8)	2.8		38.1	38.084	47.639	47.614	26 700	45 600	9 000	IRB 2014
	BA 2416 Z	79	BAM 2416	88	38.100 (1 1/2)	47.625 (1 7/8)	25.40 (1)	2.8		38.1	38.084	47.639	47.614	31 100	55 400	9 000	IRB 2016
	BA 2420 Z	97.5	BAM 2420	106	38.100 (1 1/2)	47.625 (1 7/8)	31.75 (1 1/4)	2.8		38.1	38.084	47.639	47.614	39 000	74 200	9 000	IRB 2020
41.275 (1 5/8)	BA 2610 Z	52	BAM 2610	62.5	41.275 (1 5/8)	50.800 (2)	15.88 (5/8)	2.8		41.275	41.259	50.818	50.788	18 900	30 000	8 000	IRB 2210
	BA 2620 Z	105	BAM 2620	115	41.275 (1 5/8)	50.800 (2)	31.75 (1 1/4)	2.8		41.275	41.259	50.818	50.788	41 400	82 100	8 000	IRB 2220
44.450 (1 3/4)	BA 2816 Z	91	BAM 2816	103	44.450 (1 3/4)	53.975 (2 1/8)	25.40 (1)	2.8		44.45	44.434	53.993	53.963	34 800	67 400	7 500	IRB 2416
	BA 2820 Z	112	BAM 2820	125	44.450 (1 3/4)	53.975 (2 1/8)	31.75 (1 1/4)	2.8		44.45	44.434	53.993	53.963	43 600	90 200	7 500	-
	BA 2824 Z	136	BAM 2824	148	44.450 (1 3/4)	53.975 (2 1/8)	38.10 (1 1/2)	2.8		44.45	44.434	53.993	53.963	52 000	113 000	7 500	IRB 2424
47.625 (1 7/8)	BA 3010 Z	60	BAM 3010	74	47.625 (1 7/8)	57.150 (2 1/4)	15.88 (5/8)	2.8		47.625	47.609	57.168	57.138	20 300	34 500	7 000	IRB 2410-1
	BA 3012 Z	72.5	BAM 3012	86.5	47.625 (1 7/8)	57.150 (2 1/4)	19.05 (3/4)	2.8		47.625	47.609	57.168	57.138	25 700	46 700	7 000	-
	BA 3016 Z	97.5	BAM 3016	112	47.625 (1 7/8)	57.150 (2 1/4)	25.40 (1)	2.8		47.625	47.609	57.168	57.138	35 400	70 600	7 000	-
50.80 (2)	BA 3220 Z	128	BAM 3220	144	50.800 (2)	60.325 (2 3/8)	31.75 (1 1/4)	2.8		50.800	50.781	60.434	60.313	46 600	102 000	6 000	IRB 2720
88.9 (3 1/2)	BA 5612	-	-	-	88.9 (3 1/2)	101.6 (4)	19.05 (3/4)	-		-	-	-	-	-	-	-	-

*Not a stocked range although available on request

Note. (1) Allowable rotational speed applied to oil lubrication. For grease lubrication, a maximum of 60% of this value is allowable.

Every effort has been taken to ensure that the data listed in this catalogue is correct.
Finer Power Transmissions P/L will not accept liability for any damage or loss caused as a result of the data in this catalogue.

Every effort has been taken to ensure that the data listed in this catalogue is correct.
Finer Power Transmissions P/L will not accept liability for any damage or loss caused as a result of the data in this catalogue.

JAPANESE BEARINGS
Finer Power Transmissions P/L | www.finerpt.com
Needle Roller Bearings
Shell Type - Imperial

BA Series w/Oil Hole

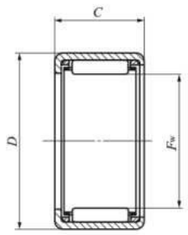

BA···Z BHA···Z

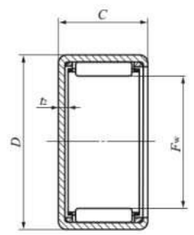

BAM BHAM

BA Series w/Oil Hole

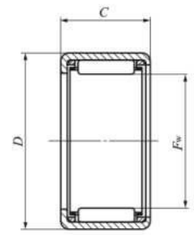

BA···Z BHA···Z

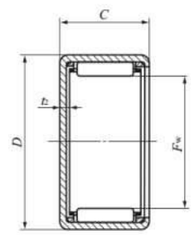

BAM BHAM

*Not a stocked range although available on request

Note. (1) Allowable rotational speed applied to oil lubrication. For grease lubrication, a maximum of 60% of this value is allowable.

Every effort has been taken to ensure that the data listed in this catalogue is correct.
Finer Power Transmissions P/L will not accept liability for any damage or loss caused as a result of the data in this catalogue.

Every effort has been taken to ensure that the data listed in this catalogue is correct.
Finer Power Transmissions P/L will not accept liability for any damage or loss caused as a result of the data in this catalogue.

JAPANESE BEARINGS
Finer Power Transmissions P/L | www.finerpt.com

Needle Roller Bearings
Shell Type - Imperial

BHA Heavy Duty w/Oil Hole Series

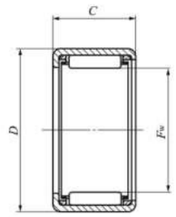

BA···Z BHA···Z

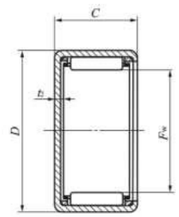

BAM BHAM

BHA Heavy Duty w/Oil Hole Series

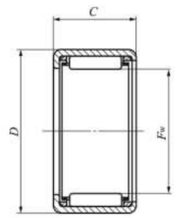

BA···Z BHA···Z

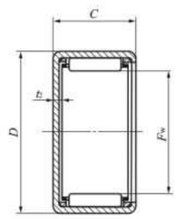

BAM BHAM

Shaft dia. mm	Boundary dimensions (mm) (inch)									Standard mounting dimensions (mm)				Basic dynamic load rating C	Basic static load rating C0	Allowable rotational speed (1)	Assembled inner ring
										Shaft dia. h6		J7					
	Standard	Mass g	Closed end*	Mass g	Fw	D	C	t2 Max.		Max	Min.	Max.	Min.	N	N	rpm	
12.700 (1/2)	BHA 810 Z	12.5	BHAM 810	13.3	12.700 (1/ 2)	19.050 (3/ 4)	15.88 (5/8)	1.3		12.7	12.689	19.062	19.041	8 830	10 900	30 000	-
	BHA 812 Z	15	BHAM 812	15.8	12.700 (1/ 2)	19.050 (3/ 4)	19.05 (3/4)	1.3		12.7	12.689	19.062	19.041	11 100	14 500	30 000	-
	BHA 87 Z	9.1	BHAM 87	9.9	12.700 (1/ 2)	19.050 (3/ 4)	11.13 (7/16)	1.3		12.7	12.689	19.062	19.041	5 670	6 120	30 000	-
	BHA 88 Z	10.4	BHAM 88	11.3	12.700 (1/ 2)	19.050 (3/ 4)	12.70 (1/2)	1.3		12.7	12.689	19.062	19.041	6 040	6 650	30 000	IRB 58
15.875 (5/8)	BHA 1010 Z	14.9	BHAM 1010	16.2	15.875 (5/ 8)	22.225 (7/ 8)	15.88 (5/8)	1.3		15.875	15.864	22.237	22.216	10 200	13 800	25 000	-
	BHA 1012 Z	18	BHAM 1012	19.3	15.875 (5/ 8)	22.225 (7/ 8)	19.05 (3/4)	1.3		15.875	15.864	22.237	22.216	12 700	18 500	25 000	IRB 612-1
	BHA 1016 Z	24	BHAM 1016	25	15.875 (5/ 8)	22.225 (7/ 8)	25.40 (1)	1.3		15.875	15.864	22.237	22.216	17 400	27 600	25 000	IRB 716
17.462 (11/16)	BHA 1110 Z	16	BHAM 1110	17.6	17.462 (11/16)	23.812 (15/ 6)	15.88 (5/8)	1.3		17.462	17.451	23.824	23.803	10 500	14 900	25 000	-
22.225 (7/8)	BHA 1412 Z	30	BHAM 1412	32.5	22.225 (7/ 8)	30.162 (1 3/16)	19.05 (3/4)	3.4		22.225	22.212	30.176	30.151	18 000	26 100	18 000	IRB 1012
	BHA 1416 Z	39.5	BHAM 1416	42	22.225 (7/ 8)	30.162 (1 3/16)	25.40 (1)	3.4		22.225	22.212	30.176	30.151	23 600	36 900	18 000	IRB 101
25.400 (1)	BHA 1610 Z	28	BHAM 1610	31	25.400 (1)	33.338 (1 5/16)	15.88 (5/8)	3.4		25.4	25.387	33.352	33.327	15 300	22 100	15 000	-
	BHA 1612 Z	33.5	BHAM 1612	37	25.400 (1)	33.338 (1 5/16)	19.05 (3/4)	3.4		25.4	25.387	33.352	33.327	19 300	29 700	15 000	IRB 1212
	BHA 1614 Z	39.5	BHAM 1614	42.5	25.400 (1)	33.338 (1 5/16)	22.22 (7/8)	3.4		25.4	25.387	33.352	33.327	23 000	37 200	15 000	IRB 1214
	BHA 1616 Z	45	BHAM 1616	48	25.400 (1)	33.338 (1 5/16)	25.40 (1)	3.4		25.4	25.387	33.352	33.327	26 400	44 500	15 000	IRB 1216
28.575 (1 1/8)	BHA 1812 Z	45	BHAM 1812	49	28.575 (1 1/ 8)	38.100 (1 1/ 2)	19.05 (3/4)	3.4		28.575	28.562	38.114	38.089	22 500	32 200	13 000	IRB 1412
31.750 (1 1/4)	BHA 2012 Z	49.5	BHAM 2012	54.5	31.750 (1 1/ 4)	41.275 (1 5/ 8)	19.05 (3/4)	3.4		31.75	31.734	41.289	41.264	24 100	36 400	12 000	IRB 1612
	BHA 2016 Z	66	BHAM 2016	71	31.750 (1 1/ 4)	41.275 (1 5/ 8)	25.40 (1)	3.4		31.75	31.734	41.289	41.264	33 200	55 000	12 000	IRB 1616
	BHA 2020 Z	81.5	BHAM 2020	86.5	31.750 (1 1/ 4)	41.275 (1 5/ 8)	31.75 (1 1/4)	3.4		31.75	31.734	41.289	41.264	40 000	69 600	12 000	IRB 1620
34.925 (1 3/8)	BHA 2212 Z	53	BHAM 2212	59	34.925 (1 3/ 8)	44.450 (1 3/ 4)	19.05 (3/4)	3.4		34.925	34.909	44.464	44.439	24 800	38 800	10 000	IRB 1812
	BHA 2216 Z	71	BHAM 2216	77	34.925 (1 3/ 8	44.450 (1 3/ 4)	25.40 (1)	3.4		34.925	34.909	44.464	44.439	34 100	58 400	10 000	IRB 1816
52.388 (2 1/16)	BHA 3324 Z	205	BHAM 3324	225	52.388 (2 1/16)	64.294 (2 17/32)	38.10 (1 1/2)	3.4		52.388	52.369	64.312	64.282	73 900	154 000	6 000	-

* Not a stocked range although available on request.

Note. (1) Allowable rotational speed applied to oil lubrication. For grease lubrication, a maximum of 60% of this value is allowable.

Every effort has been taken to ensure that the data listed in this catalogue is correct.
Finer Power Transmissions P/L will not accept liability for any damage or loss caused as a result of the data in this catalogue.

Every effort has been taken to ensure that the data listed in this catalogue is correct.
Finer Power Transmissions P/L will not accept liability for any damage or loss caused as a result of the data in this catalogue.

JAPANESE BEARINGS
Finer Power Transmissions P/L | www.finerpt.com

Needle Roller Bearings
Machined Type - Imperial

BR w/o Inner Ring Series

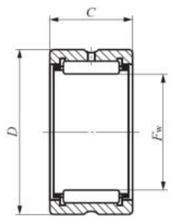

BR

BR w/o Inner Ring Series

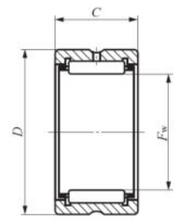

BR

Shaft dia. mm(inch)	Identification number	Mass(Ref.) g	Boundary dimensions mm (inch)				Standard mounting dimensions mm		Basic dynamic load rating C	Basic static load rating C0	Allowable rotational speed(2)
			Fw	D	C		DaMax.	r as max(1)	N	N	rpm
15.875 (5/8)	BR 101812	49	15.875 (5/ 8)	28.575 (1 1/ 8)	19.050 (3/ 4)		24.5	0.6	18 900	19 700	25 000
19.050 (3/4)	BR 122012	56	19.050 (3/ 4)	31.750 (1 1/ 4)	19.050 (3/ 4)		26.5	1	21 700	24 400	20 000
	BR 122016	75	19.050 (3/ 4)	31.750 (1 1/ 4)	25.400 (1)		26.5	1	27 600	33 100	20 000
22.225 (7/8)	BR 142212	63	22.225 (7/ 8)	34.925 (1 3/ 8)	19.050 (3/ 4)		29.7	1	23 000	27 100	18 000
	BR 142216	84.5	22.225 (7/ 8)	34.925 (1 3/ 8)	25.400 (1)		29.7	1	29 100	36 800	18 000
25.400 (1)	BR 162412	69	25.400 (1)	38.100 (1 1/ 2)	19.050 (3/ 4)		32.9	1	25 300	31 900	16 000
	BR 162416	92.5	25.400 (1)	38.100 (1 1/ 2)	25.400 (1)		32.9	1	32 100	43 300	16 000
28.575 (1 1/8)	BR 182616	102	28.575 (1 1/ 8)	41.275 (1 5/ 8)	25.400 (1)		36	1	34 900	49 900	14 000
	BR 182620	128	28.575 (1 1/ 8)	41.275 (1 5/ 8)	31.750 (1 1/ 4)		36	1	43 200	65 600	14 000
31.750 (1 1/4)	BR 202816	110	28.575 (1 1/ 8)	44.450 (1 3/ 4)	25.400 (1)		39.2	1	36 000	53 500	13 000
	BR 202820	138	28.575 (1 1/ 8)	44.450 (1 3/ 4)	31.750 (1 1/ 4)		39.2	1	44 600	70 300	13 000
34.925 (1 3/8)	BR 223016	119	34.925 (1 3/ 8)	47.625 (1 7/ 8)	25.400 (1)		42.4	1	38 500	60 000	11 000
	BR 223020	149	34.925 (1 3/ 8)	47.625 (1 7/ 8)	31.750 (1 1/ 4)		42.4	1	47 700	78 900	11 000
38.100 (1 1/2)	BR 243316	149	38.100 (1 1/ 2)	52.388 (2 1/16)	25.400 (1)		45.1	1.5	43 700	66 900	11 000
	BR 243320	187	38.100 (1 1/ 2)	52.388 (2 1/16)	31.750 (1 1/ 4)		45.1	1.5	54 200	88 200	11 000
41.275 (1 5/8)	BR 263516	158	41.275 (1 5/ 8)	55.562 (2 3/16)	25.400 (1)		48.3	1.5	44 800	70 900	9 500
	BR 263520	199	41.275 (1 5/ 8)	55.562 (2 3/16)	31.750 (1 1/ 4)		48.3	1.5	55 600	93 400	9 500
44.450 (1 3/4)	BR 283716	170	44.450 (1 3/ 4)	58.738 (2 5/16)	25.400 (1)		51.5	1.5	47 500	78 200	9 000
	BR 283720	215	44.450 (1 3/ 4)	58.738 (2 5/16)	31.750(1 1/ 4)		51.5	1.5	58 900	103 000	9 000
50.800 (2)	BR 324116	190	50.800 (2)	65.088 (2 9/16)	25.400 (1)		57.8	1.5	51 000	89 400	8 000
	BR 324120	240	50.800 (2)	65.088 (2 9/16)	31.750 (1 1/ 4)		57.8	1.5	63 200	118 000	8 000
57.150 (2 1/4)	BR 364824	435	57.150 (2 1/ 4)	76.200 (3)	38.100 (1 1/ 2)		69	1.5	90 300	158 000	7 000
	BR 364828	510	57.150 (2 1/ 4)	76.200 (3)	44.450 (1 3/ 4)		69	1.5	105 000	191 000	7 000
63.500 (2 1/2)	BR 405224	475	63.500 (2 1/ 2)	82.550 (3 1/ 4)	38.100 (1 1/ 2)		74.3	2	94 600	174 000	6 500
	BR 405228	555	63.500 (2 1/ 2)	82.550 (3 1/ 4)	44.450 (1 3/ 4)		74.3	2	110 000	210 000	6 500
69.850 (2 3/4)	BR 445624	510	69.850 (2 3/ 4)	88.900 (3 1/ 2)	38.100 (1 1/ 2)		80.7	2	98 700	189 000	5 500
76.200 (3)	BR 486024	555	76.200 (3)	95.250 (3 3/ 4)	38.100 (1 1/ 2)		87	2	105 000	211 000	5 500
	BR 486028	650	76.200 (3)	95.250 3 3/ 4)	44.450 (1 3/ 4)		87	2	122 000	255 000	5 500
82.550 (3 1/4)	BR 526832	990	82.550 (3 1/ 4)	107.950 (4 1/ 4)	44.450 (1 3/ 4)		99.7	2	141 000	259 000	5 000
88.900 (3 1/2)	BR 567232	1 220	88.900 (3 1 / 2)	114.300 (4 1 / 2)	50.800 2		106.1	2	162 000	316 000	4 500
101.600 (4)	BR 648032	1 370	101.600 (4)	127.000 (5)	50.800 2		117.8	2.5	176 000	368 000	4 000

Every effort has been taken to ensure that the data listed in this catalogue is correct.
Finer Power Transmissions P/L will not accept liability for any damage or loss caused as a result of the data in this catalogue.

Every effort has been taken to ensure that the data listed in this catalogue is correct.
Finer Power Transmissions P/L will not accept liability for any damage or loss caused as a result of the data in this catalogue.

JAPANESE BEARINGS
Finer Power Transmissions P/L | www.finerpt.com

Needle Roller Bearings
Machined Type - Imperial

BR UU Series

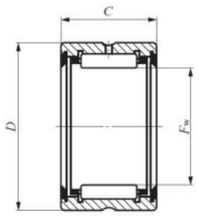

BR ··· UU

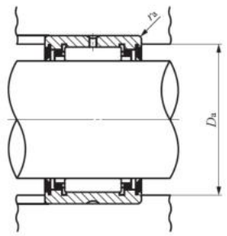

BR UU Series

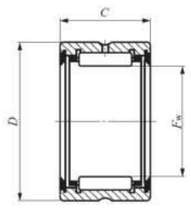

BR ··· UU

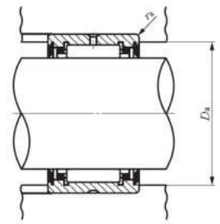

Shaft dia. mm (inch)	Identification number		Mass(Ref.)	Boundary dimensions mm (inch)				Standard mounting dimensions mm		Basic dynamic load rating C	Basic static load rating C0	Allowable rotational speed(2)
	With two seals	With one seal*	g	Fw	D	C		DaMax.	r as max(1)	N	N	rpm
15.875 (5/8)	BR 101816 UU	BR 101816 U	54	15.875 (5/ 8)	28.575 (1 1/ 8)	25.400 (1)		24.5	0.6	18 300	20 000	12 000
25.400 (1)	BR 162416 UU	BR 162416 U	83	25.400 (1)	38.100 (1 1/ 2)	25.400 (1)		32.9	1	23 600	31 300	8 000
28.575 (1 1/8)	BR 182620 UU	BR 182620 U	115	28.575 (1 1/ 8)	41.275 (1 5/ 8)	31.750 (1 1/ 4)		36	1	34 900	49 900	7 000
31.75 (1 1/4)	BR 202820 UU	-	124	31.75 (1 1/4)	44.45 (1 3/4)	31.75 (1 1/4)		39.2	1	36 000	53 500	6 500
34.925 (1 3/8)	BR 223020 UU	BR 223020 U	134	34.925 (1 3/ 8)	47.625 (1 7/ 8)	31.750 (1 1/ 4)		42.4	1	38 500	60 000	5 500
38.100 (1 1/2)	BR 243320 UU	BR 243320 U	168	38.100 (1 1/ 2)	52.388 (2 1/16)	31.750 (1 1/ 4)		45.1	1.5	43 700	66 900	5 500
47.625 (1 7/8)	BR 303920 UU	BR 303920 U	202	47.625 (1 7/ 8)	61.912 (2 7/16)	31.750 (1 1/ 4)		54.7	1.5	48 500	82 100	4 000
50.800 (2)	BR 324120 UU	BR 324120 U	216	50.800 (2)	65.088 (2 9/16)	31.750 (1 1/ 4)		57.8	1.5	51 000	89 400	4 000
57.15 (2 1/4)	BR 364828 UU	-	459	57.15 (2 1/4)	76.2 (3)	44.45 (1 3/4)		69	1.5	90 300	158 000	3 500
69.85 (2 3/4)	BR 445628 UU	BR 445628 U	540	69.850 (2 3/ 4)	88.900 (3 1/ 2)	44.450 (1 3/ 4)		80.7	2	98 700	189 000	2 500
76.2 (3)	BR 486028 UU	BR 486028 U	585	76.200 (3)	95.250 (3 3/ 4)	44.450 (1 3/ 4)		87	2	105 000	211 000	2 500

*Not a stocked range although available on request.

Every effort has been taken to ensure that the data listed in this catalogue is correct.
Finer Power Transmissions P/L will not accept liability for any damage or loss caused as a result of the data in this catalogue.

Every effort has been taken to ensure that the data listed in this catalogue is correct.
Finer Power Transmissions P/L will not accept liability for any damage or loss caused as a result of the data in this catalogue.

JAPANESE BEARINGS
Finer Power Transmissions P/L | www.finerpt.com

Needle Roller Bearings
Machined Type - Metric

RNA w/o Inner Ring Series

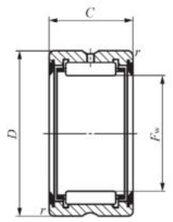

RNA49

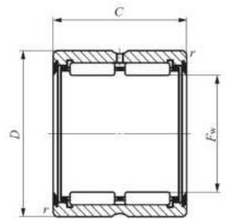

RNA69

RNA w/o Inner Ring Series

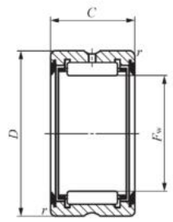

RNA49

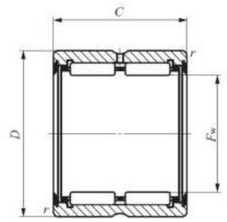

RNA69

Shaft dia. mm	Identification number		Mass (Ref.)	Boundary dimensions mm					Standard mounting dimension Da	Basic dynamic load rating C	Basic static load rating C0	Allowable rotational speed(2)
	RNA 49	RNA 69	g	Fw	D	C	rs min (1)		Max. mm	N	N	rpm
20	-	RNA 6902	37	20	28	23	0.3		26	19 300	28 800	20 000
	RNA 4902	-	21.5	20	28	13	0.3		26	10 900	13 800	20 000
22	RNA 4903	-	23.5	22	30	13	0.3		28	11 700	15 600	18 000
25	-	RNA 6904	95.5	25	37	30	0.3		35	35 400	48 900	16 000
	RNA 4904	-	55.5	25	37	17	0.3		35	21 000	25 000	16 000
30	-	RNA 6905	111	30	42	30	0.3		40	42 100	64 300	13 000
	RNA 4905	-	64	30	42	17	0.3		40	23 700	30 700	13 000
35	-	RNA 6906	125	35	47	30	0.3		45	43 000	69 000	11 000
	RNA 4906	-	72.5	35	47	17	0.3		45	25 200	34 700	11 000
80	-	RNA 6914	910	80	100	54	1		95	134 000	311 000	5 000

Every effort has been taken to ensure that the data listed in this catalogue is correct.
Finer Power Transmissions P/L will not accept liability for any damage or loss caused as a result of the data in this catalogue.

Every effort has been taken to ensure that the data listed in this catalogue is correct.
Finer Power Transmissions P/L will not accept liability for any damage or loss caused as a result of the data in this catalogue.

JAPANESE BEARINGS
Finer Power Transmissions P/L | www.finerpt.com
Needle Roller Bearings
Machined Type - Metric

RNA UU Rubber Sealed Series

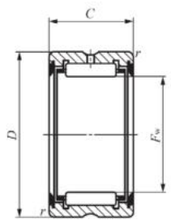

RNA49 ··· UU

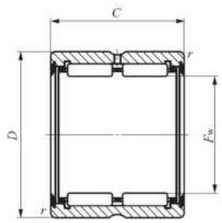

RNA69 ··· UU

Shaft dia. mm.	RNA 49 With two seals	RNA 49 With one seal*	Mass (Ref.)	Boundary dimensions mm Fw	D	C	r s min(1		Standard mounting dimension Da	Basic dynamic load rating C	Basic static load rating C0	Allowable rotational speed(2)
			g						Max.mm	N	N	rpm
16	RNA 4901UU	RNA 4901U	17.9	16	24	13	0.3		22	8 470	9 320	12 000
20	RNA 4902UU	RNA 4902U	21.5	20	28	13	0.3		28	10 300	13 100	8 500
22	RNA 4903UU	RNA 4903U	23	22	30	13	0.3		26	9 570	11 600	9 500
25	RNA 4904UU	RNA 4904U	54.5	25	37	17	0.3		35	18 000	20 500	7 500
30	RNA 4905UU	RNA 4905U	63	30	42	17	0.3		40	20 300	25 100	6 500
35	RNA 4906UU	RNA 4906U	71	35	47	17	0.3		45	21 500	28 400	5 500
42	RNA 4907UU	RNA 4907U	112	45	58	20	0.6		54	31 600	50 400	4 000
48	RNA 4908UU	RNA 4908U	150	48	62	22	0.6		58	37 200	58 400	4 000
52	RNA 4909UU	RNA 4909U	197	52	68	22	0.6		64	38 900	63 400	3 500
58	RNA 4910UU	RNA 4910U	177	58	72	40	0.6		68	70 800	142 000	3 500
63	RNA 4911UU	RNA 4911U	265	63	80	25	1		75	52 200	85 700	3 000
68	RNA 4912UU	RNA 4912U	285	68	85	25	1		80	54 500	92 800	3 000
72	RNA 4913UU	RNA 4913U	325	72	90	25	1		85	56 800	99 800	2 500
80	RNA 4914UU	RNA 4914U	495	80	100	30	1		95	76 900	143 000	2 500

* Not a stocked range although available on request.

RNA UU Rubber Sealed Series

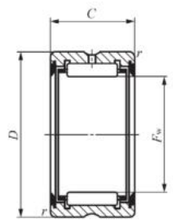

RNA49 ··· UU

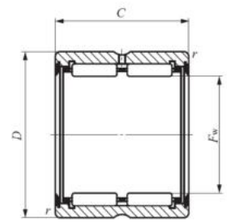

RNA69 ··· UU

Shaft dia. mm.	RNA 69 With two seals	RNA 69 With one seal*	Mass (Ref.)	Boundary dimensions mm Fw	D	C	r s min(1		Standard mounting dimension Da	Basic dynamic load rating C	Basic static load rating C0	Allowable rotational speed(2)
			g						Max.mm	N	N	rpm
16	RNA 6901UU	RNA 6901U	30	16	24	22	0.3		22	15 500	20 400	12 000
20	RNA 6902UU	RNA 6902U	37.5	20	28	23	0.3		26	18 500	27 100	9 500
22	RNA 6903UU	RNA 6903U	40.5	22	30	23	0.3		28	19 800	30 600	8 500
25	RNA 6904UU	RNA 6904U	95.5	25	37	30	0.3		35	33 000	44 600	7 500
30	RNA 6905UU	RNA 6905U	111	30	42	30	0.3		40	39 200	58 700	6 500
35	RNA 6906UU	RNA 6906U	125	35	47	30	0.3		45	40 100	63 000	5 500
42	RNA 6907UU	RNA 6907U	200	42	55	36	0.6		51	51 600	92 600	4 500
48	RNA 6908UU	RNA 6908U	270	48	62	40	0.6		58	63 700	117 000	4 000
52	RNA 6909UU	RNA 6909U	355	52	68	40	0.6		64	66 600	127 000	3 500
58	RNA 6910UU	RNA 6910U	320	55	70	22	0.6		66	39 600	66 100	3 500
63	RNA 6911UU	RNA 6911U	470	63	80	45	1		75	89 400	171 000	3 000
68	RNA 6912UU	RNA 6912U	505	68	85	45	1		80	93 400	186 000	3 000
72	RNA 6913UU	RNA 6913U	580	72	90	45	1		85	97 400	200 000	2 500

*** Not a stocked range although available on request.**

Every effort has been taken to ensure that the data listed in this catalogue is correct.
Finer Power Transmissions P/L will not accept liability for any damage or loss caused as a result of the data in this catalogue.
Every effort has been taken to ensure that the data listed in this catalogue is correct.
Finer Power Transmissions P/L will not accept liability for any damage or loss caused as a result of the data in this catalogue.

JAPANESE BEARINGS
Finer Power Transmissions P/L | www.finerpt.com

Needle Roller Bearings
Machined Type - Metric

TAF w/o Inner Ring Series

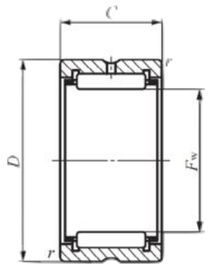

TAF

TAF w/o Inner Ring Series

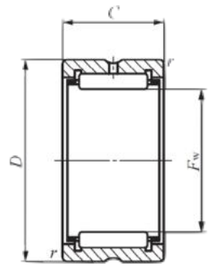

TAF

Shaft dia. mm.	Identification number	Mass (Ref.)	Boundary dimensions mm					Standard mounting dimension Da	Basic dynamic load rating C	Basic static load rating C0	Allowable rotational speed(2)
		g	Fw	D	C	rs min (1)		Max. mm	N	N	rpm
5	TAF 51010	3.4	5	10	10	0.2		8.4	2 420	1 950	80 000
6	TAF 61210	5.1	6	12	10	0.2		10.4	20550	3 370	70 000
	TAF 61212	6.4	6	12	12	0.2		10.4	3 400	3 170	70 000
7	TAF 71410	6.9	7	14	10	0.2		12.4	3 600	2 960	60 000
	TAF 71412	8.3	7	14	12	0.2		12.4	4 610	4 050	60 000
8	TAF 81512	9.1	8	15	12	0.2		13.4	5 060	4 690	50 000
	TAF 81516	12.9	8	15	16	0.2		13.4	7 080	7 220	50 000
9	TAF 91612	9.8	9	16	12	0.2		14.4	5 490	5 330	45 000
	TAF 91616	13.2	9	16	16	0.2		14.4	7 680	8 210	45 000
10	TAF 101712	10.7	10	17	12	0.2		15.4	5 880	5 970	40 000
	TAF 101716	14.3	10	17	16	0.2		15.4	8 230	9 190	40 000
12	TAF 121912	12.2	12	19	12	0.3		17	6 610	7 260	35 000
	TAF 121916	16.3	12	19	16	0.3		17	9 250	11 200	35 000
14	TAF 142216	21	14	22	16	0.3		20	11 700	13 700	30 000
	TAF 142220	26.5	14	22	20	0.3		20	14 800	18 600	30 000
15	TAF 152316	22.5	15	23	16	0.3		21	12 300	14 900	30 000
	TAF 152320	28	15	23	20	0.3		21	15 600	20 200	30 000
16	TAF 162416	23	16	24	16	0.3		22	12 300	15 100	25 000
	TAF 162420	29	16	24	20	0.3		22	15 500	20 400	25 000
17	TAF 172516	24.5	17	25	16	0.3		23	12 900	16 300	25 000
	TAF 172520	30.5	17	25	20	0.3		23	16 300	22 000	25 000
18	TAF 182616	25.5	18	26	16	0.3		24	13 400	17 500	20 000
	TAF 182620	32	18	26	20	0.3		24	17 000	23 600	20 000
19	TAF 192716	27	19	27	16	0.3		25	14 000	18 700	20 000
	TAF 192720	34	19	27	20	0.3		25	17 700	25 300	20 000
20	TAF 202816	27.5	20	28	16	0.3		26	13 900	18 800	20 000
	TAF 202820	35.5	20	28	20	0.3		26	17 600	25 400	20 000
21	TAF 212916	29	21	29	16	0.3		27	14 400	20 000	19 000
	TAF 212920	36	21	29	20	0.3		27	18 200	27 100	19 000
22	TAF 223016	30	22	30	16	0.3		28	14 900	21 200	18 000
	TAF 223020	37.5	22	30	20	0.3		28	18 900	28 700	18 000
24	TAF 243216	32	24	32	16	0.3		30	15 300	22 500	17 000
	TAF 243220	40.5	24	32	20	0.3		30	19 400	30 500	17 000
25	TAF 253316	33.5	25	33	16	0.3		31	15 800	23 700	16 000
	TAF 253320	42	25	33	20	0.3		31	20 000	32 100	16 000
26	TAF 263416	34.5	26	34	16	0.3		32	16 300	24 900	15 000
	TAF 263420	43.5	26	34	20	0.3		32	20 600	33 800	15 000
28	TAF 283720	51.5	28	37	20	0.3		35	21 700	37 100	14 000
	TAF 283730	83.5	28	37	30	0.3		35	31 100	58 900	14 000

Every effort has been taken to ensure that the data listed in this catalogue is correct.
Finer Power Transmissions P/L will not accept liability for any damage or loss caused as a result of the data in this catalogue.

Every effort has been taken to ensure that the data listed in this catalogue is correct.
Finer Power Transmissions P/L will not accept liability for any damage or loss caused as a result of the data in this catalogue.

JAPANESE BEARINGS
Finer Power Transmissions P/L | www.finerpt.com
Needle Roller Bearings
Machined Type - Metric

TAF w/o Inner Ring Series

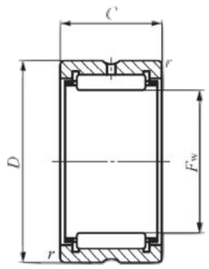

TAF

TAF w/o Inner Ring Series

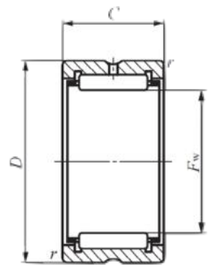

TAF

Shaft dia. mm.	Identification number	Mass (Ref.)	Boundary dimensions mm					Standard mounting dimension Da	Basic dynamic load rating C	Basic static load rating C0	Allowable rotational speed(2)
		g	Fw	D	C	rs min (1)		Max. mm	N	N	rpm
29	TAF 293820	57	29	38	20	0.3		36	21 600	37 200	14 000
	TAF 293830	85	29	38	30	0.3		36	30 900	59 100	14 000
30	TAF 304020	64.5	30	40	20	0.3		38	25 100	40 100	13 000
	TAF 304030	97.5	30	40	30	0.3		38	36 000	63 900	13 000
32	TAF 324220	68	32	42	20	0.3		40	25 700	42 200	12 000
35	TAF 354520	73.5	35	45	20	0.3		43	26 900	46 200	11 000
	TAF 354530	112	35	45	30	0.3		43	38 600	73 600	11 000
37	TAF 374720	77.5	37	47	20	0.3		45	28 200	50 100	11 000
	TAF 374730	117	37	47	30	0.3		45	40 500	79 800	11 000
38	TAF 384820	79	38	48	20	0.3		46	28 100	50 200	11 000
	TAF 384830	119	38	48	30	0.3		46	40 300	80 000	11 000
40	TAF 405020	83	40	50	20	0.3		48	29 400	54 100	10 000
	TAF 405030	125	40	50	30	0.3		48	42 300	86 200	10 000
42	TAF 425220	86.5	42	52	20	0.3		50	29 900	56 200	9 500
	TAF 425230	130	42	52	30	0.3		50	43 000	89 400	9 500
43	TAF 435330	133	43	53	30	0.3		51	43 800	92 600	9 500
45	TAF 455520	92	45	55	20	0.3		53	31 000	60 200	9 000
	TAF 455530	138	45	55	30	0.3		53	44 600	95 800	9 000
47	TAF 475720	95	47	57	20	0.3		55	31 500	62 200	8 500
	TAF 475730	144	47	57	30	0.3		55	45 200	99 100	8 500
50	TAF 506225	159	50	62	25	0.3		60	43 000	85 300	8 000
	TAF 506235	225	50	62	35	0.3		60	58 000	125 000	8 000
55	TAF 556825	193	55	68	25	0.3		66	45 400	94 000	7 500
	TAF 556835	255	55	68	35	0.3		66	61 200	138 000	7 500
60	TAF 607225	187	60	72	25	0.3		70	47 500	103 000	6 500
	TAF 607235	260	60	72	35	0.3		70	64 100	151 000	6 500
65	TAF 657825	225	65	78	25	0.6		74	49 600	112 000	6 000
	TAF 657835	315	65	78	35	0.6		74	67 000	164 000	6 000
68	TAF 688225	250	68	82	25	0.6		78	54 800	117 000	6 000
	TAF 688235	350	68	82	35	0.6		78	72 000	166 000	6 000
70	TAF 708535	395	70	85	35	0.6		81	73 000	171 000	5 500
73	TAF 739025	335	73	90	25	1		85	61 100	127 000	5 500
	TAF 739035	475	73	90	35	1		85	80 400	181 000	5 500
75	TAF 759225	345	75	92	25	1		87	62 100	131 000	5 500
	TAF 759235	485	75	92	35	1		87	81 700	186 000	5 500
80	TAF 809525	315	80	95	25	1		90	59 400	137 000	5 000
	TAF 809535	445	80	95	35	1		90	78 100	195 000	5 000

Every effort has been taken to ensure that the data listed in this catalogue is correct.
Finer Power Transmissions P/L will not accept liability for any damage or loss caused as a result of the data in this catalogue.
Every effort has been taken to ensure that the data listed in this catalogue is correct.
Finer Power Transmissions P/L will not accept liability for any damage or loss caused as a result of the data in this catalogue.

JAPANESE BEARINGS
Finer Power Transmissions P/L | www.finerpt.com
Needle Roller Bearings
Machined Type - Metric

TAF w/o Inner Ring Series

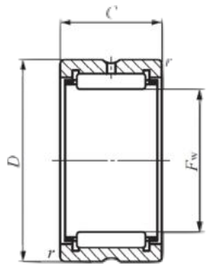

TAF

Shaft dia. mm.	Identification number	Mass (Ref.)	Boundary dimensions mm					Standard mounting dimension Da	Basic dynamic load rating C	Basic static load rating C0	Allowable rotational speed(2)
		g	Fw	D	C	rs min (1)		Max. mm	N	N	rpm
85	TAF 8510525	435	85	105	25	1		100	76 300	145 000	4 500
	TAF 8510535	610	85	105	35	1		100	102 000	210 000	4 500
90	TAF 9011025	455	90	110	25	1		105	77 300	150 000	4 500
	TAF 9011035	640	90	110	35	1		105	103 000	217 000	4 500
95	TAF 9511526	495	95	115	26	1		110	79 700	159 000	4 000
	TAF 9511536	690	95	115	36	1		110	106 000	231 000	4 000
100	TAF 10012026	525	100	120	26	1		115	82 400	168 000	4 000
	TAF 10012036	725	100	120	36	1		115	110 000	244 000	4 000
110	TAF 11013030	660	110	130	30	1		125	106 000	240 000	3 500
	TAF 11013040	880	110	130	40	1		125	134 000	324 000	3 500

TAF w/o Inner Ring Series

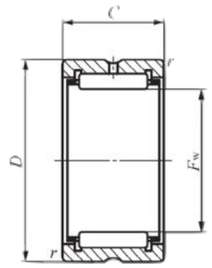

TAF

Every effort has been taken to ensure that the data listed in this catalogue is correct.
Finer Power Transmissions P/L will not accept liability for any damage or loss caused as a result of the data in this catalogue.
Every effort has been taken to ensure that the data listed in this catalogue is correct.
Finer Power Transmissions P/L will not accept liability for any damage or loss caused as a result of the data in this catalogue.

JAPANESE BEARINGS
Finer Power Transmissions P/L | www.finerpt.com
Needle Roller Bearings
Machined Type w/Inner Ring - Metric

TAFI w/Inner Ring Series

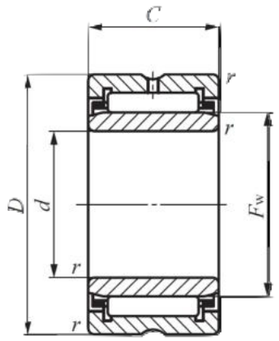

TAFI w/Inner Ring Series

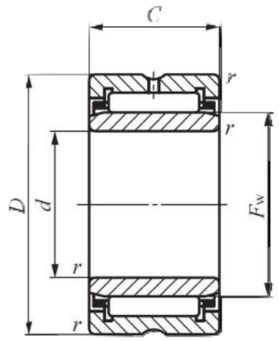

TAFI

TAFI

Shaft dia. mm	Identification number	Mass (Ref.) g	Boundary dimensions mm			rs min	Fw	S		Standard mounting dimensions (mm)			Basic dynamic load rating C N	Basic static load rating C0 N	Allowable rotational speed 2 rpm	Assembled inner ring
			d	D	C					da Min	da Max	Da Max				
5	TAFI 51512	11.9	5	15	12	0.2	8	0.5		6.6	7.7	13.4	5 060	4 690	50 000	LRT 5812
6	TAFI 61612	13	6	16	12	0.2	9	0.5		7.6	8.7	14.4	5 490	5 330	45 000	LRT 6912
	TAFI 61616	17.5	6	16	16	0.2	9	0.5		7.6	8.7	14.4	7 680	8 210	45 000	LRT 6916
7	TAFI 71716	19.2	7	17	16	0.2	10	0.5		8.6	9.7	15.4	8 230	9 190	40 000	LRT 71016
9	TAFI 91912	16.7	9	19	12	0.3	12	0.5		11	11.5	17	6 610	7 260	35 000	LRT 91212
	TAFI 91916	22.5	9	19	16	0.3	12	0.5		11	11.5	17	9 250	11 200	35 000	LRT 91216
10	TAFI 102216	30	10	22	16	0.3	14	0.5		12	13	20	11 700	13 700	13 700	LRT 101416
	TAFI 102220	38	10	22	20	0.3	14	0.5		12	13	20	14 800	18 600	30 000	LRT 101420
12	TAFI 122416	33.5	12	24	16	0.3	16	0.5		14	15	22	12 300	15 100	25 000	LRT 121616
	TAFI 122420	42.5	12	24	20	0.3	16	0.5		14	15	22	15 500	20 400	25 000	LRT 121620
15	TAFI 152716	39.5	15	27	16	0.3	19	0.5		17	18	25	14 000	18 700	20 000	LRT 151916
	TAFI 152720	50	15	27	20	0.3	19	0.5		17	18	25	17 700	25 300	20 000	LRT 151920
17	TAFI 172916	43.5	17	29	16	0.3	21	0.5		19	20	27	14 400	20 000	19 000	LRT 172116
	TAFI 172920	54	17	29	20	0.3	21	0.5		19	20	27	18 200	27 100	19 000	LRT 172120
20	TAFI 203216	48.5	20	32	16	0.3	24	0.5		22	23	30	15 300	22 500	17 000	LRT 202416
	TAFI 203220	61	20	32	20	0.3	24	0.5		22	23	30	19 400	30 500	17 000	LRT 202420
22	TAFI 223416	52	22	34	16	0.3	26	0.5		24	25	32	16 300	24 900	15 000	LRT 222616
	TAFI 223420	67.5	22	34	20	0.3	26	0.5		24	25	32	20 600	33 800	15 000	LRT 222620
25	TAFI 253820	82	25	38	20	0.3	29	0.5		27	28	36	21 600	37 200	14 000	LRT 252920
	TAFI 253830	123	25	38	30	0.3	29	1		27	28	36	30 900	59 100	14 000	LRT 252930
28	TAFI 284220	96.5	28	42	20	0.3	32	0.5		30	31	40	25 700	42 200	12 000	LRT 283220
	TAFI 284230	145	28	42	30	0.3	32	1		30	31	40	36 800	67 200	12 000	LRT 283230
30	TAFI 304520	112	30	45	20	0.3	35	0.3		32	34	43	26 900	46 200	11 000	LRT 303520
	TAFI 304530	171	30	45	30	0.3	35	0.5		32	34	43	38 600	73 600	11 000	LRT 303530
32	TAFI 324720	121	32	47	20	0.3	37	0.3		34	36	45	28 200	50 100	11 000	LRT 323720
	TAFI 324730	180	32	47	30	0.3	37	0.5		34	36	45	40 500	79 800	11 000	LRT 323730
35	TAFI 355020	129	35	50	20	0.3	40	0.3		37	39	48	29 400	54 100	10 000	LRT 354020
	TAFI 355030	192	35	50	30	0.3	40	0.5		37	39	48	42 300	86 200	10 000	LRT 354030
38	TAFI 385320	136	38	53	20	0.3	43	0.3		40	42	51	30 500	58 200	9 500	LRT 384320
	TAFI 385330	205	38	53	30	0.3	43	0.5		40	42	51	43 800	92 600	9 500	LRT 384330
40	TAFI 405520	143	40	55	20	0.3	45	0.3		42	44	53	31 000	60 200	9 000	LRT 404520
	TAFI 405530	215	40	55	30	0.3	45	0.5		42	44	53	44 600	95 800	9 000	LRT 404530
42	TAFI 425730	225	42	57	30	0.3	47	0.5		44	46	55	45 200	99 100	8 500	LRT 424730
45	TAFI 456225	230	45	62	25	0.3	50	0.5		47	49	60	43 000	85 300	8 000	LRT 455025
	TAFI 456235	320	45	62	35	0.3	50	1		47	49	60	58 000	125 000	8 000	LRT 455035
50	TAFI 506825	270	50	68	25	0.3	55	0.5		52	54	66	45 400	94 000	7 500	LRT 505525
	TAFI 506835	365	50	68	35	0.3	55	1		52	54	66	61 200	138 000	7 500	LRT 505535

Every effort has been taken to ensure that the data listed in this catalogue is correct.
Finer Power Transmissions P/L will not accept liability for any damage or loss caused as a result of the data in this catalogue.
Every effort has been taken to ensure that the data listed in this catalogue is correct.
Finer Power Transmissions P/L will not accept liability for any damage or loss caused as a result of the data in this catalogue.

JAPANESE BEARINGS
Finer Power Transmissions P/L | www.finerpt.com
Needle Roller Bearings
Machined Type w/Inner Ring - Metric

TAFI w/Inner Ring Series

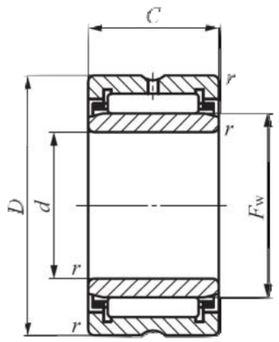

TAFI

TAFI w/Inner Ring Series

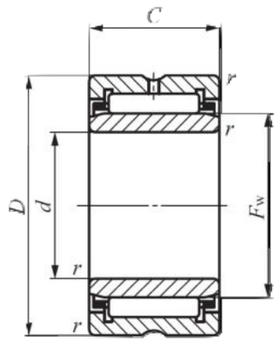

TAFI

Shaft dia. mm	Identification number	Mass (Ref.) g	Boundary dimensions mm			rs min	Fw	S		Standard mounting dimensions (mm)			Basic dynamic load rating C N	Basic static load rating C0 N	Allowable rotational speed 2 rpm	Assembled inner ring
			d	D	C					da Min	da Max	Da Max				
55	TAFI 557225	275	55	72	25	0.3	60	0.5		57	59	70	47 500	103 000	6 500	LRT 556025
	TAFI 557235	380	55	72	35	0.3	60	1		57	59	70	64 100	151 000	6 500	LRT 556035
60	TAFI 608235	560	60	82	35	0.6	68	1		64	66	78	72 000	166 000	6 000	LRT 606835
65	TAFI 659035	710	65	90	35	1	73	1		70	71	85	80 400	181 000	5 500	LRT 657335
70	TAFI 709525	540	70	95	25	1	80	0.3		75	78	90	59 400	137 000	5 000	LRT 708025
	TAFI 709535	755	70	95	35	1	80	1		75	78	90	78 100	195 000	5 000	LRT 708035
75	TAFI 7510525	675	75	105	25	1	85	0.5		80	83	100	76 300	145 000	4 500	LRT 758525
80	TAFI 8011025	710	80	110	25	1	90	0.5		85	88	105	77 300	150 000	4 500	LRT 809025
	TAFI 8011035	995	80	110	35	1	90	1.5		85	88	105	103 000	217 000	4 500	LRT 809035
85	TAFI 8511526	775	85	115	26	1	95	1		90	93	110	79 700	159 000	4 000	LRT 859526
90	TAFI 9012026	820	90	120	26	1	100	1		95	98	115	82 400	168 000	4 000	LRT 9010026
95	TAFI 9512526	860	95	125	26	1	105	1		100	103	120	84 700	178 000	4 000	LRT 9510526
	TAFI 9512536	1 190	95	125	36	1	105	2		100	103	120	113 000	258 000	4 000	LRT 9510536

Every effort has been taken to ensure that the data listed in this catalogue is correct.
Finer Power Transmissions P/L will not accept liability for any damage or loss caused as a result of the data in this catalogue.
Every effort has been taken to ensure that the data listed in this catalogue is correct.
Finer Power Transmissions P/L will not accept liability for any damage or loss caused as a result of the data in this catalogue.

JAPANESE BEARINGS
Finer Power Transmissions P/L | www.finerpt.com
Needle Roller Bearings
Machined Type w/Inner Ring - Metric

NA w/Inner Ring Series

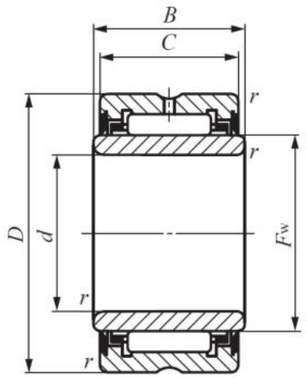

NA49 ··· UU

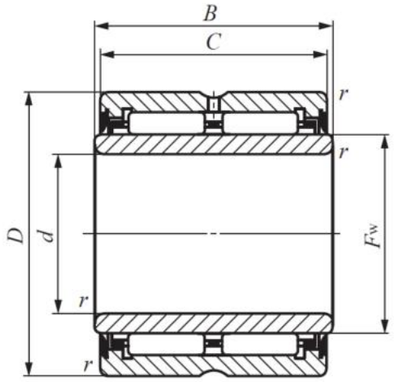

NA69 ··· UU

NA w/Inner Ring Series

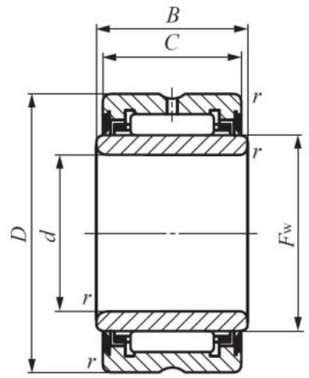

NA49 ··· UU

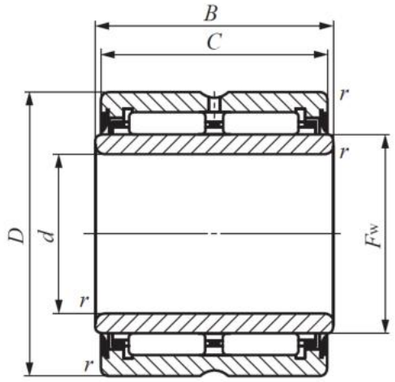

NA69 ··· UU

Shaft dia. mm	Identification number			Mass (Ref.) g	d	Boundary dimensions mm						Standard mounting dimensions mm			Basic dynamic load rating C	Basic static load rating C0 N	Allowable rotational speed(3) rpm	Assembled inner ring
	NA 48	NA 49	NA 69			D	C	rs min	Fw	S2		da		Da				
												Min.	Max.	Max.				
8	-	NA 498	-	15	8	19	11	0.2	10	0.5		9.6	9.9	17.4	6 180	5 030	40 000	LRT 81011
10	-	NA 4900	-	24	10	22	13	0.3	14	0.5		12	13	20	9 230	10 100	30 000	LRT 101413
12	-	NA 4901	-	26.5	12	24	13	0.3	16	0.5		14	15	22	9 660	11 100	25 000	LRT 121613
	-	-	NA 6901	44.5	12	24	22	0.3	16	0.5		14	15	22	17 100	23 000	25 000	LRT 121622
15	-	NA 4902	-	35	15	28	13	0.3	20	0.3		17	19	26	10 900	13 800	20 000	LRT 152013
	-	-	NA 6902	61	15	28	23	0.3	20	0.3		17	19	26	19 300	28 800	20 000	LRT 152023
17	-	NA 4903	-	35	17	30	13	0.3	20	0.3		17	19	26	10 900	13 800	20 000	LRT 152013
	-	-	NA 6903	67	17	30	23	0.3	22	0.3		19	21	28	20 800	32 500	18 000	LRT 172223
20	-	NA 4904	-	78.5	20	37	17	0.3	25	0.5		22	24	35	21 000	25 000	16 000	LRT 202517
	-	-	NA 6904	136	20	37	30	0.3	25	0.5		22	24	35	35 400	48 900	16 000	LRT 202530
22	-	-	NA 69/22	152	22	39	30	0.3	28	0.5		24	27	37	36 300	56 900	14 000	LRT 222830
25	-	NA 4905	-	92.5	25	42	17	0.3	30	0.5		27	29	40	23 700	30 700	13 000	LRT 253017
	-	-	NA 6905	160	25	42	30	0.3	30	0.5		27	29	40	42 100	64 300	13 000	LRT 253030
28	-	-	NA 69/28	176	28	45	30	0.3	32	1		30	31	43	41 800	64 800	12 000	LRT 283230
	-	NA 49/28	-	101	28	45	17	0.3	32	1		30	31	43	24 500	32 700	12 000	LRT 283217
30	-	NA 4906	-	106	30	47	17	0.3	35	0.5		32	34	45	25 200	34 700	11 000	LRT 303517
	-	-	NA 6906	184	30	47	30	0.3	35	0.5		32	34	45	43 000	69 000	11 000	LRT 303530
32	-	-	NA 69/32	295	32	52	36	0.6	40	0.3		36	39	48	53 500	95 700	10 000	LRT 324036
	-	NA 49/32	-	165	32	52	20	0.6	40	0.5		36	39	48	31 200	47 800	10 000	LRT 324020
35	-	NA 4907	-	178	35	55	20	0.6	42	0.5		39	41	51	32 000	50 100	9 500	LRT 354220
	-	-	NA 6907	320	35	55	36	0.6	42	0.3		39	41	51	54 900	100 000	9 500	LRT 354236
40	-	NA 4908	-	245	40	62	22	0.6	48	0.5		44	47	58	41 600	67 400	8 500	LRT 404822
	-	-	NA 6908	440	40	62	40	0.6	48	0.3		44	47	58	71 300	135 000	8 500	LRT 404840
45	-	NA 4909	-	285	45	68	22	0.6	52	0.5		49	51	64	43 500	73 300	7 500	LRT 455222
	-	-	NA 6909	520	45	68	40	0.6	52	0.3		49	51	64	74 600	147 000	7 500	LRT 455240
50	-	NA 4910	-	295	50	72	22	0.6	58	0.5		54	57	68	46 200	82 100	7 000	LRT 505822
	-	-	NA 6910	530	50	72	40	0.6	58	0.3		54	57	68	79 200	164 000	7 000	LRT 505840
55	-	NA 4911	-	410	55	80	25	1	63	1		60	61	75	57 600	97 200	6 500	LRT 556325
	-	-	NA 6911	730	55	80	45	1	63	0.5		60	61	75	98 700	194 000	6 500	LRT 556345
60	-	NA 4912	-	440	60	85	25	1	68	1		65	66	80	60 200	105 000	6 000	LRT 606825-1
	-	-	NA 6912	785	60	85	45	1	68	0.5		65	66	80	103 000	211 000	6 000	LRT 606845
65	-	NA 4913	-	470	65	90	25	1	72	1		70	70.5	85	62 700	113 000	5 500	LRT 657225
	-	-	NA 6913	840	65	90	45	1	72	0.5		70	70.5	85	108 000	227 000	5 500	LRT 657245
70	-	NA 4914	-	765	70	100	30	1	80	1.5		75	78	95	83 200	158 000	5 000	LRT 708030
	-	-	NA 6914	1 400	70	100	54	1	80	1		75	78	95	134 000	311 000	5 000	LRT 708054

Every effort has been taken to ensure that the data listed in this catalogue is correct.
Finer Power Transmissions P/L will not accept liability for any damage or loss caused as a result of the data in this catalogue.
Every effort has been taken to ensure that the data listed in this catalogue is correct.
Finer Power Transmissions P/L will not accept liability for any damage or loss caused as a result of the data in this catalogue.

JAPANESE BEARINGS
Finer Power Transmissions P/L | www.finerpt.com
Needle Roller Bearings
Machined Type w/Inner Ring - Metric

NA w/Inner Ring Series

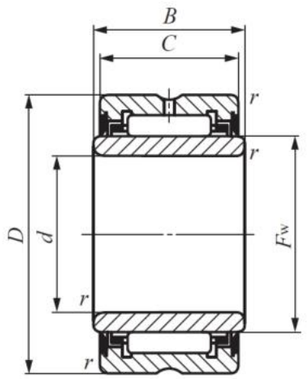

NA49 ··· UU

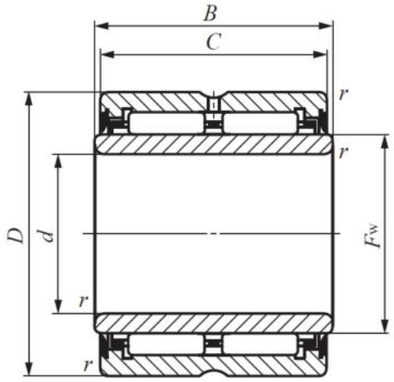

NA69 ··· UU

NA49 ··· UU

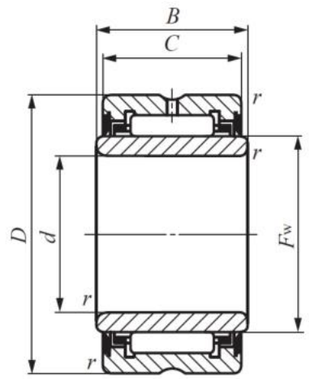

NA69 ··· UU

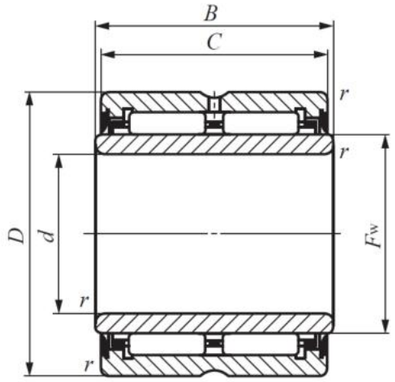

Shaft dia. mm	Identification number			Mass (Ref.) g	d	Boundary dimensions mm						Standard mounting dimensions mm			Basic dynamic load rating C	Basic static load rating C0 N	Allowable rotational speed(3) rpm	Assembled inner ring
	NA 48	NA 49	NA 69			D	C	rs min	Fw	S2		da		Da				
												Min.	Max.	Max.				
75	-	NA 4915	-	810	75	105	30	1	85	1.5		80	83	100	86 200	169 000	4 500	LRT 758530
	-	-	NA 6915	1 480	75	105	54	1	85	1		80	83	100	138 000	331 000	4 500	LRT 758554
80	-	NA 4916	-	855	80	110	30	1	90	1.5		85	88	105	87 300	175 000	4 500	LRT 809030
	-	-	NA 6916	1 560	80	110	54	1	90	1		85	88	105	143 000	351 000	4 500	LRT 809054
85	-	-	NA 6917	2 340	85	120	63	1.1	100	0.5		91.5	98	113.5	173 000	467 000	4 000	LRT 8510063
90	-	-	NA 6918	2 460	90	125	63	1.1	105	0.5		96.5	103	118.5	178 000	490 000	4 000	LRT 9010563
100	-	NA 4920	-	1 960	100	140	40	1.1	115	1		106.5	113	133.5	145 000	329 000	3 500	LRT 10011540
110	-	NA 4922	-	2 120	110	150	40	1.1	125	1		116.5	123	143.5	152 000	357 000	3 000	LRT 11012540
120	NA 4824	-	-	1 300	120	150	30	1	130	1		125	128	145	96 900	259 000	3 000	LRT 12013030
130	NA 4826	-	-	1 960	130	165	35	1.1	145	1		136.5	143	158.5	116 000	340 000	3 000	LRT 13014535
150	NA 4830	-	-	2 880	150	190	40	1.1	165	1.5		156.5	163	183.5	168 000	446 000	2 500	LRT 15016540
160	NA 4832	-	-	3 050	160	200	40	1.1	175	1.5		166.5	173	193.5	173 000	474 000	2 500	LRT 16017540
170	NA 4834	-	-	4 120	170	215	45	1.1	185	1.5		176.5	183	208.5	211 000	567 000	1 900	LRT 17018545
180	NA 4836	-	-	4 340	180	225	45	1.1	195	1.5		186.5	208	232	249 000	726 000	1 800	LRT 19021050
190	NA 4838	-	-	5 760	190	240	50	1.5	210	1.5		198	218	242	255 000	766 000	1 600	LRT 20022050

Every effort has been taken to ensure that the data listed in this catalogue is correct.
Finer Power Transmissions P/L will not accept liability for any damage or loss caused as a result of the data in this catalogue.
Every effort has been taken to ensure that the data listed in this catalogue is correct.
Finer Power Transmissions P/L will not accept liability for any damage or loss caused as a result of the data in this catalogue.

JAPANESE BEARINGS
Finer Power Transmissions P/L | www.finerpt.com

Needle Roller Bearings
Machined Type w/Inner Ring - Metric

NA 4900UU Rubber Sealed w/Inner Ring Series

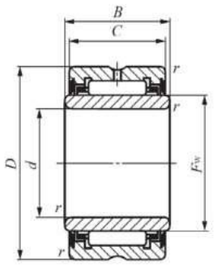

NA49 ··· UU

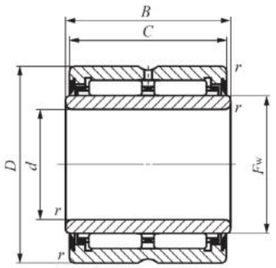

NA69 ··· UU

NA 4900UU Rubber Sealed w/Inner Ring Series

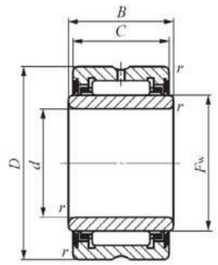

NA49 ··· UU

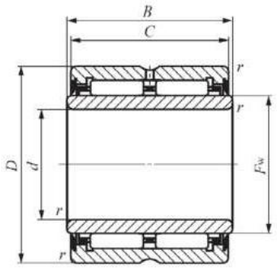

NA69 ··· UU

Shaft dia. mm	Identification number		Mass (Ref.) g	Boundary dimensions mm					rs min	Fw	Standard mounting dimensions (mm)			Basic dynamic load rating C	Basic static load rating C0	Allowable rotational speed 2	Assembled inner ring
	With two seals	With one seal*		d	D	C	B				da Min	da Max	Da Max	N	N	rpm	
10	NA 4900UU	NA 4900U	24.5	10	22	13	14		0.3	14	12	13	20	8 080	8 490	14 000	LRTZ 101414
12	NA 4901UU	NA 4901U	27.5	12	24	13	14		0.3	16	14	15	22	8 470	9 320	12 000	LRTZ 121614
15	NA 4902UU	NA 4902U	36	15	28	13	14		0.3	20	17	19	26	9 570	11 600	9 500	LRTZ 152014
17	NA 4903UU	NA 4903U	39.5	17	30	13	14		0.3	22	19	21	28	10 300	13 100	8 500	LRTZ 172214
20	NA 4904UU	NA 4904U	78.5	20	37	17	18		0.3	25	22	24	35	18 000	20 500	7 500	LRTZ 202518
25	NA 4905UU	NA 4905U	92.5	25	42	17	18		0.3	30	27	29	40	20 300	25 100	6 500	LRTZ 253018
28	NA 49/28 UU	-	101	28	45	17	18		0.3	32	30	31	43	24 500	32 700	12 000	LRT 283217
30	NA 4906UU	NA 4906U	106	30	47	17	18		0.3	35	32	34	45	21 500	28 400	5 500	LRTZ 303518
35	NA 4907UU	NA 4907U	179	35	55	20	21		0.6	42	39	41	51	30 100	46 300	4 500	LRTZ 354221
40	NA 4908UU	NA 4908U	245	40	62	22	23		0.6	48	44	47	58	37 200	58 400	4 000	LRTZ 404823
45	NA 4909UU	NA 4909U	290	45	68	22	23		0.6	52	49	51	64	38 900	63 400	3 500	LRTZ 455223
50	NA 4910UU	NA 4910U	295	50	72	22	23		0.6	58	54	57	68	41 300	71 100	3 500	LRTZ 505823
55	NA 4911UU	NA 4911U	415	55	80	25	26		1	63	60	61	75	52 200	85 700	3 000	LRTZ 556326
60	NA 4912UU	NA 4912U	445	60	85	25	26		1	68	65	66	80	54 500	92 800	3 000	LRTZ 606826
65	NA 4913UU	NA 4913U	475	65	90	25	26		1	72	70	70.5	85	56 800	99 800	2 500	LRTZ 657226
70	NA 4914UU	NA 4914U	770	70	100	30	31		1	80	75	78	95	76 900	143 000	2 500	LRTZ 708031
75	NA 4915UU	NA 4915U	815	75	105	30	31		1	85	80	83	100	79 600	153 000	2 000	LRTZ 758531
80	NA 4916UU	NA 4916U	860	80	110	30	31		1	90	85	88	105	80 700	158 000	2 000	LRTZ 809031
85	NA 4917UU	NA 4917U	1 300	85	120	35	36		1.1	100	91.5	98	113.5	103 000	225 000	1 900	LRTZ 8510036
90	NA 4918UU	NA 4918U	1 360	90	125	35	36		1.1	105	96.5	103	118.5	106 000	238 000	1 800	LRTZ 9010536
95	NA 4919UU	NA 4919U	1 420	95	130	35	36		1.1	110	101.5	108	123.5	109 000	250 000	1 700	LRTZ 9511036
12	NA 6901UU	NA 6901U	45.5	12	24	22	23		0.3	16	14	15	22	15 500	20 400	12 000	LRTZ 121623
15	NA 6902UU	NA 6902U	62.5	15	28	23	24		0.3	20	17	19	26	18 500	27 100	9 500	LRTZ 152024
17	NA 6903UU	NA 6903U	68.5	17	30	23	24		0.3	22	19	21	28	19 800	30 600	8 500	LRTZ 172224
20	NA 6904UU	NA 6904U	137	20	37	30	31		0.3	25	22	24	35	33 000	44 600	7 500	LRTZ 202531
22	NA 69/22 UU	NA69/22U	152	22	39	30	31		0.3	28	24	27	37	36 300	56 900	7 000	LRT 222830
25	NA 6905UU	NA 6905U	162	25	42	30	31		0.3	30	27	29	40	39 200	58 700	6 500	LRTZ 253031
28	NA 69/28 UU	NA 69/28U	175	28	45	30	31		0.3	32	30	31	43	41 800	64 800	6 000	LRT 283230

* Not a stocked range although available on request.

Every effort has been taken to ensure that the data listed in this catalogue is correct.
Finer Power Transmissions P/L will not accept liability for any damage or loss caused as a result of the data in this catalogue.

Every effort has been taken to ensure that the data listed in this catalogue is correct.
Finer Power Transmissions P/L will not accept liability for any damage or loss caused as a result of the data in this catalogue.

JAPANESE BEARINGS
Finer Power Transmissions P/L | www.finerpt.com
Needle Roller Bearings
Machined Type w/Inner Ring - Metric

NA 6900UU Rubber Sealed w/Inner Ring Series

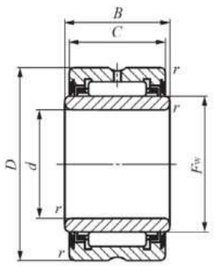

NA49 ··· UU

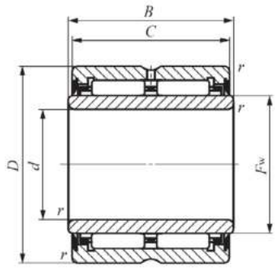

NA69 ··· UU

NA 6900UU Rubber Sealed w/Inner Ring Series

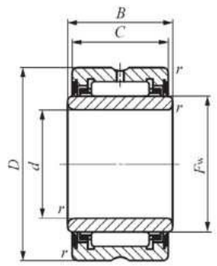

NA49 ··· UU

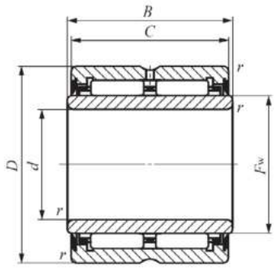

NA69 ··· UU

Shaft dia. mm	Identification number		Mass (Ref.) g	Boundary dimensions mm					rs min	Fw	Standard mounting dimensions (mm)			Basic dynamic load rating C	Basic static load rating C0	Allowable rotational speed 2	Assembled inner ring
	With two seals	With one seal*		d	D	C	B				da Min	da Max	Da Max	N	N	rpm	
30	NA 6906UU	NA 6906U	185	30	47	30	31		0.3	35	32	34	45	40 100	63 000	5 500	LRTZ 303531
32	NA 69/32 UU	NA 6932U	295	32	52	36	37		0.6	40	36	39	48	53 500	95 700	5 000	LRT 324036
35	NA 6907UU	NA 6907U	320	35	55	36	37		0.6	42	39	41	51	51 600	92 600	4 500	LRTZ 354237
40	NA 6908UU	NA 6908U	440	40	62	40	41		0.6	48	44	47	58	63 700	117 000	4 000	LRTZ 404841
45	NA 6909UU	NA 6909U	520	45	68	40	41		0.6	52	49	51	64	66 600	127 000	3 500	LRTZ 455241
50	NA 6910UU	NA 6910U	530	50	72	40	41		0.6	58	54	57	68	70 800	142 000	3 500	LRTZ 505841
55	NA 6911UU	NA 6911U	730	55	80	45	46		1	63	60	61	75	89 400	171 000	3 000	LRTZ 556346
60	NA 6912UU	NA 6912U	785	60	85	45	46		1	68	65	66	80	93 400	186 000	3 000	LRTZ 606846
65	NA 6913UU	NA 6913U	845	65	90	45	46		1	72	70	70.5	85	97 400	200 000	2 500	LRTZ 657246
70	NA 6914UU	NA 6914U	1 400	70	100	54	55		1	80	75	78	95	124 000	281 000	2 500	LRTZ 708055
75	NA 6915UU	NA 6915U	1 480	75	105	54	55		1	85	80	83	100	128 000	299 000	2 000	LRTZ 758555
85	NA 6917UU	NA 6917U	2 360	85	120	63	64		1.1	100	91.5	98	113.5	168 000	448 000	1 900	LRTZ 8510064
90	NA 6918UU	NA 6918U	2 480	90	125	63	64		1.1	105	96.5	103	118.5	172 000	471 000	1 800	LRTZ 9010564

* Not a stocked range although available on request.

Every effort has been taken to ensure that the data listed in this catalogue is correct.
Finer Power Transmissions P/L will not accept liability for any damage or loss caused as a result of the data in this catalogue.
Every effort has been taken to ensure that the data listed in this catalogue is correct.
Finer Power Transmissions P/L will not accept liability for any damage or loss caused as a result of the data in this catalogue.

LRT Series

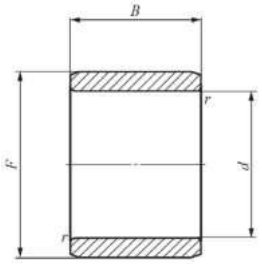

LRT

Shaft dia. mm	Identification number		Mass (Ref.)	Boundary dimensions mm				Standard mounting dimension mm da		Assembled bearings
	LRT	LRTZ	g	d	F	B	rs min	Min.	Max.	
5	LRT 5812	-	2.8	5	8	12	0.2	6.6	7.7	TAF 81512
	LRT 5816	-	3.8	5	8	16	0.2	6.6	7.7	TAF 81516
6	LRT 6810	-	1.7	6	8	10	0.15	7.2	7.7	RNA 496
	LRT 6912	-	3.2	6	9	12	0.2	7.6	8.7	TAF 91612
	LRT 6916	-	4.3	6	9	16	0.2	7.6	8.7	TAF 91616
	LRT 61010	-	3.9	6	10	10	0.3	8	9.7	RNAF 101710
7	LRT 71012	-	3.6	7	10	12	0.2	8.6	9.7	TAF 101712
	LRT 71012-1	-	3.6	7	10	12	0.3	9	9.7	RNAF 102012
	LRT 71016	-	4.9	7	10	16	0.2	8.6	9.7	TAF 101716 NAX 1023
8	LRT 81011	-	2.4	8	10	11	0.2	9.6	9.9	RNA 498
9	LRT 91211	-	3.1	9	12	11	0.3	11	11.5	RNA 499
	LRT 91212	-	4.5	9	12	12	0.3	11	11.5	TAF 121912 RNAF 122212
	LRT 91216	-	6	9	12	16	0.3	11	11.5	TAF 121916 NAX 1223
10	LRT 101412	-	7	10	14	12	0.3	12	13	RNAF 142612
	LRT 101413	-	7.5	10	14	13	0.3	12	13	RNA 4900 RNAF 142213
	LRT 101416	-	9	10	14	16	0.3	12	13	TAF 142216
	LRT 101420	-	11.5	10	14	20	0.3	12	13	TAF 142220 RNAFW142220
12	LRT 121516	-	8	12	15	16.5	0.3	14	14.5	NAX 1523 NBX 1523
	LRT 121612	-	8.5	12	16	12	0.3	14	15	RNAF 162812
	LRT 121613	-	8.5	12	16	13	0.3	14	15	RNA 4901 RNAF 162413
	LRT 121616	-	10.5	12	16	16	0.3	14	15	TAF 162416
	LRT 121620	-	13.5	12	16	20	0.3	14	15	TAF 162420 RNAFW162420
	LRT 121622	-	14.5	12	16	22	0.3	14	15	RNA 6901
14	LRT 141717	-	9.5	14	17	17	0.3	16	16.5	NAX 1725 NBX 1725
15	LRT 151916	-	12.5	15	19	16	0.3	17	18	TAF 192716
	LRT 151920	-	16	15	19	20	0.3	17	18	TAF 192720
	LRT 152012	-	12	15	20	12	0.3	17	19	RNAF 203212
	LRT 152013	-	13.5	15	20	13	0.3	17	19	RNA 4902 RNAF 202813
	LRT 152020	-	21.5	15	20	20.5	0.3	17	19	TR 203320
	LRT 152023	-	24	15	20	23	0.3	17	19	RNA 6902
	LRT 152026	-	28	15	20	26	0.3	17	19	RNAFW 202826
17	LRT 172020	-	13.5	17	20	20.5	0.3	19	19.5	NAX 2030 NBX 2030
	LRT 172116	-	14.5	17	21	16	0.3	19	20	TAF 212916
	LRT 172120	-	18	17	21	20	0.3	19	20	TAF 212920
	LRT 172213	-	15.5	17	22	13	0.3	19	21	RNA 4903 RNAF 223013
	LRT 172216	-	19	17	22	16	0.3	19	21	RNAF 223516
	LRT 172223	-	26.5	17	22	23	0.3	19	21	RNA 6903
	LRT 172225	-	30	17	22	25.5	0.3	19	21	TR 223425
	LRT 172226	-	31	17	22	26	0.3	19	21	RNAFW 223026
	LRT 172232	-	38	17	22	32	0.3	19	21	RNAFW 223532

Every effort has been taken to ensure that the data listed in this catalogue is correct.
Finer Power Transmissions P/L will not accept liability for any damage or loss caused as a result of the data in this catalogue.

LRT Series

Shaft dia. mm	Identification number		Mass (Ref.)	Boundary dimensions mm				Standard mounting dimension mm da		Assembled bearings
	LRT	LRTZ	g	d	F	B	rs min	Min.	Max.	
20	LRT 202416	-	16.5	20	24	16	0.3	22	23	TAF 243216
	LRT 202420	-	20.5	20	24	20	0.3	22	23	TAF 243220
	LRT 202516	-	22	20	25	16	0.3	22	24	RNAF 253716
	LRT 202517	-	23	20	25	17	0.3	22	24	RNA 4904 RNAF 253517
	LRT 202520	-	28	20	25	20.5	0.3	22	24	TR 253820 NAX 2530
	LRT 202525	-	35	20	25	25.5	0.3	22	24	TR 253825
	LRT 202526	-	36	20	25	26	0.3	22	24	RNAFW 253526
	LRT 202530	-	40.5	20	25	30	0.3	22	24	RNA 6904
	LRT 202532	-	44	20	25	32	0.3	22	24	RNAFW 253732
22	LRT 222616	-	17.5	22	26	16	0.3	24	25	TAF 263416
	LRT 222620	-	24	22	26	20	0.3	24	25	TAF 263420
	LRT 222817	-	30.5	22	28	17	0.3	24	27	RNA 49/22
	LRT 222830	-	55	22	28	30	0.3	24	27	RNA 69/22
25	LRT 252920	-	25	25	29	20	0.3	27	28	TAF 293820
	LRT 252930	-	38	25	29	30	0.3	27	28	TAF 293830
	LRT 253016	-	28	25	30	16	0.3	27	29	RNAF 304216
	LRT 253017	-	28.5	25	30	17	0.3	27	29	RNA 4905 RNAF 304017
	LRT 253020	-	34	25	30	20.5	0.3	27	29	NAX 3030 NBX 3030
	LRT 253025	-	42	25	30	25.5	0.3	27	29	TR 304425
	LRT 253026	-	44.5	25	30	26	0.3	27	29	RNAFW 304026
	LRT 253030	-	49	25	30	30	0.3	27	29	RNA 6905
	LRT 253032	-	54	25	30	32	0.3	27	29	RNAFW 304232
28	LRT 283217	-	24.5	28	32	17	0.3	30	31	RNA 49/28
	LRT 283220	-	28.5	28	32	20	0.3	30	31	TAF 324220
	LRT 283230	-	43	28	32	30	0.3	30	31	RNA 69/28 TAF 324230
30	LRT 303516	-	31.5	30	35	16	0.3	32	34	RNAF 354716
	LRT 303517	-	33.5	30	35	17	0.3	32	34	RNA 4906 RNAF 354517
	LRT 303520	-	38.5	30	35	20	0.3	32	34	TAF 354520 NAX 3530
	LRT 303526	-	52	30	35	26	0.3	32	34	RNAFW 354526
	LRT 303530	-	59	30	35	30	0.3	32	34	RNA 6906 TAF 354530
	LRT 303532	-	64	30	35	32	0.3	32	34	RNAFW 354732
32	LRT 323720	-	43.5	32	37	20	0.3	34	36	TAF 374720
	LRT 323730	-	63	32	37	30	0.3	34	36	TAF 374730
	LRT 323830	-	77	32	38	30.5	0.6	36	37	TR 385230
	LRT 324020	-	69	32	40	20	0.6	36	39	RNA 49/32
	LRT 324036	-	123	32	40	36	0.6	36	39	RNA 69/32
35	LRT 354017	-	39	35	40	17	0.3	37	39	RNAF 405017
	LRT 354020	-	46	35	40	20	0.3	37	39	TAF 405020 RNAF 405520
	LRT 354030	-	67	35	40	30	0.3	37	39	TAF 405030
	LRT 354034	-	78	35	40	34	0.3	37	39	RNAFW 405034
	LRT 354040	-	95	35	40	40	0.3	37	39	RNAFW 405540
	LRT 354220	-	65	35	42	20	0.6	39	41	RNA 4907
	LRT 354230	-	97	35	42	30.5	0.6	39	41	TR 425630
	LRT 354236	-	120	35	42	36	0.6	39	41	RNA 6907
38	LRT 384320	-	47.5	38	43	20	0.3	40	42	TAF 435320
	LRT 384330	-	72	38	43	30	0.3	40	42	TAF 435330
40	LRT 404517	-	44.5	40	45	17	0.3	42	44	RNAF 455517
	LRT 404520	-	51	40	45	20	0.3	42	44	TAF 455520 RNAF 456220
	LRT 404530-1	-	77	40	45	30.5	0.6	44	44.5	TR 455930
	LRT 404534	-	88	40	45	34	0.3	42	44	RNAFW 455534
	LRT 404540	-	105	40	45	40	0.3	42	44	RNAFW 456240
	LRT 404840	-	165	40	48	40	0.6	44	47	RNA 6908
42	LRT 424720	-	54	42	47	20	0.3	44	46	TAF 475720
	LRT 424730	-	81	42	47	30	0.3	44	46	TAF 475730
	LRT 424830	-	100	42	48	30.5	0.6	46	47	TR 486230

Every effort has been taken to ensure that the data listed in this catalogue is correct.
Finer Power Transmissions P/L will not accept liability for any damage or loss caused as a result of the data in this catalogue.

LRT Series

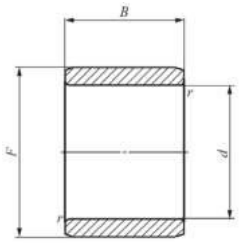

LRT

Shaft dia. mm	Identification number		Mass (Ref.)	Boundary dimensions mm				Standard mounting dimension mm da		Assembled bearings
	LRT	LRTZ	g	d	F	B	rs min	Min.	Max.	
45	LRT 455020	-	58	45	50	20	0.3	47	49	RNAF 506220
	LRT 455025	-	71	45	50	25	0.3	47	49	TAF 506225
	LRT 455030	-	90	45	50	30.5	0.6	49	49.5	TR 506430
	LRT 455035	-	95	45	50	35	0.3	47	49	TAF 506235
	LRT 455040	-	115	45	50	40	0.3	47	49	RNAFW 506240
	LRT 455222	-	88	45	52	22	0.6	49	51	RNA 4909
	LRT 455240	-	165	45	52	40	0.6	49	51	RNA 6909
	LRT 455520	-	120	45	55	20	1	50	54	RNAF 557220
	LRT 455540	-	245	45	55	40	1	50	54	RNAFW 557240
50	LRT 505520	-	63	50	55	20	0.3	52	54	RNAF 556820
	LRT 505525	-	77	50	55	25	0.3	52	54	TAF 556825
	LRT 505535	-	110	50	55	35	0.3	52	54	TAF 556835
	LRT 505540	-	130	50	55	40	0.3	52	54	RNAFW 556840
	LRT 505822	-	116	50	58	22	0.6	54	57	RNA 4910
	LRT 505840	-	210	50	58	40	0.6	54	57	RNA 6910
	LRT 505845	-	235	50	58	45.5	1	55	57	TR 587745
	LRT 506020	-	135	50	60	20	1	55	59	RNAF 607820
	LRT 506025	-	165	50	60	25.5	1	55	59	NAX 6040 NBX 6040
	LRT 506040	-	265	50	60	40	1	55	59	RNAFW 607840
55	LRT 556025	-	88	55	60	25	0.3	57	59	TAF 607225
	LRT 556035	-	120	55	60	35	0.3	57	59	TAF 607235
	LRT 556238	-	190	55	62	38.5	1	60	60.5	TR 628138
	LRT 556325	-	145	55	63	25	1	60	61	RNA 4911
	LRT 556345	-	255	55	63	45	1	60	61	RNA 6911
	LRT 556530	-	220	55	65	30	1.5	63	63.5	RNAF 658530
	LRT 556560	-	435	55	65	60	1.5	63	63.5	RNAFW 658560
60	LRT 606825	-	150	60	68	25	0.6	64	66	TAF 688225
	LRT 606825-1	-	150	60	68	25	1	65	66	RNA 4912
	LRT 606835	-	210	60	68	35	0.6	64	66	TAF 688235
	LRT 606845	-	275	60	68	45	1	65	66	RNA 6912
	LRT 607025	-	195	60	70	25.5	1	65	68	NAX 7040
	LRT 607030	-	240	60	70	30	1.5	68	68.5	RNAF 709030
	LRT 607045	-	355	60	70	45.5	1	65	68	TR 708945
	LRT 607060	-	480	60	70	60	1.5	68	68.5	RNAFW 709060
65	LRT 657225	-	145	65	72	25	1	70	70.5	RNA 4913
	LRT 657245	-	255	65	72	45	1	70	70.5	RNA 6913
	LRT 657335	-	235	65	73	35	1	70	71	TAF 739035
	LRT 657530	-	260	65	75	30	1.5	73	73.5	RNAF 759530
	LRT 657560	-	520	65	75	60	1.5	73	73.5	RNAFW 759560
70	LRT 708025	-	225	70	80	25	1	75	78	TAF 809525
	LRT 708030	-	275	70	80	30	1	75	78	RNA 4914
	LRT 708035	-	310	70	80	35	1	75	78	TAF 809535
	LRT 708054	-	490	70	80	54	1	75	78	RNA 6914

Every effort has been taken to ensure that the data listed in this catalogue is correct.
Finer Power Transmissions P/L will not accept liability for any damage or loss caused as a result of the data in this catalogue.

LRT Series

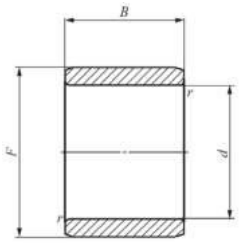

LRT

Shaft dia. mm	Identification number		Mass (Ref.)	Boundary dimensions mm				Standard mounting dimension mm da		Assembled bearings
	LRT	LRTZ	g	d	F	B	rs min	Min.	Max.	
75	LRT 758345	-	350	75	83	45.5	1	80	81	TR 8310845
	LRT 758525	-	240	75	85	25	1	80	83	TAF 8510525
	LRT 758530	-	290	75	85	30	1	80	83	RNA 4915
	LRT 758535	-	335	75	85	35	1	80	83	TAF 8510535
	LRT 758554	-	520	75	85	54	1	80	83	RNA 6915
80	LRT 809025	-	255	80	90	25	1	85	88	TAF 9011025
	LRT 809035	-	355	80	90	35	1	85	88	TAF 9011035
	LRT 809054	-	550	80	90	54	1	85	88	RNA 6916
85	LRT 859526	-	280	85	95	26	1	90	93	TAF 9511526
	LRT 859530	-	330	85	95	30	1.5	93	93.5	RNAF 9511530
	LRT 859536	-	390	85	95	36	1	90	93	TAF 9511536
	LRT 859545	-	490	85	95	45.5	1.5	93	93.5	TR 9512045
	LRT 8510035	-	575	85	100	35	1.1	91.5	98	RNA 4917
90	LRT 9010026	-	295	90	100	26	1	95	98	TAF 10012026
	LRT 9010030	-	355	90	100	30	1.5	98	98.5	RNAF 10012030
	LRT 9010036	-	415	90	100	36	1	95	98	TAF 10012036
	LRT 9010050	-	580	90	100	50.5	1.5	98	98.5	TR 10012550
	LRT 9010535	-	610	90	105	35	1.1	96.5	103	RNA 4918
	LRT 9010563	-	1 100	90	105	63	1.1	96.5	103	RNA 6918
95	LRT 9510526	-	315	95	105	26	1	100	103	TAF 10512526
	LRT 9510536	-	430	95	105	36	1	100	103	TAF 10512536
	LRT 9511035	-	650	95	110	35	1.1	101.5	108	RNA 4919
	LRT 9511063	-	1 160	95	110	63	1.1	101.5	108	RNA 6919
100	LRT 10011030	-	380	100	110	30	1	105	108	TAF 11013030
	LRT 10011040	-	500	100	110	40	1	105	108	TAF 11013040
	LRT 10011050	-	640	100	110	50.5	1.5	108	108.5	TR 11013550
	LRT 10011540	-	770	100	115	40	1.1	106.5	113	RNA 4920
105	LRT 10511550	-	670	105	115	50.5	1.5	113	113.5	TR 11515350
110	LRT 11012030	-	410	110	120	30	1	115	118	RNA 4822
	LRT 11012540	-	840	110	125	40	1.1	116.5	123	RNA 4922
120	LRT 12013030	-	450	120	130	30	1	125	128	RNA 4824
	LRT 12013545	-	1 030	120	135	45	1.1	126.5	133	RNA 4924
130	LRT 13014535	-	860	130	145	35	1.1	136.5	143	RNA 4826
	LRT 13015050	-	1 670	130	150	50	1.5	138	148	RNA 4926
135	LRT 13515060	-	1 560	135	150	60.5	1.5	143	148	TR 15018860
140	LRT 14015535	-	930	140	155	35	1.1	146.5	153	RNA 4828
	LRT 14016050	-	1 790	140	160	50	1.5	148	158	RNA 4928
150	LRT 15016540	-	1 130	150	165	40	1.1	156.5	163	RNA 4830
	LRT 15017060	-	2 290	150	170	60	2	159	168	RNA 4930
160	LRT 16017540	-	1 200	160	175	40	1.1	166.5	173	RNA 4832

Every effort has been taken to ensure that the data listed in this catalogue is correct.
Finer Power Transmissions P/L will not accept liability for any damage or loss caused as a result of the data in this catalogue.

LRTZ Series

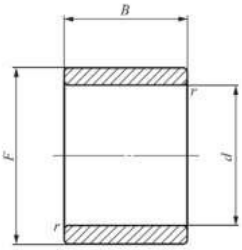

LRTZ

Shaft dia. mm	Identification number		Mass (Ref.)	Boundary dimensions mm				Standard mounting dimension mm da		Assembled bearings
	LRT	LRTZ	g	d	F	B	rs min	Min.	Max.	
10	-	LRTZ 101414	8.2	10	14	14	0.3	12	13	RNA 4900 UU
12	-	LRTZ 121614	9.6	12	16	14	0.3	14	15	RNA 4901 UU
	-	LRTZ 121623	15.5	12	16	23	0.3	14	15	RNA 6901 UU
15	-	LRTZ 152014	14.5	15	20	14	0.3	17	19	RNA 4902 UU
	-	LRTZ 152024	25	15	20	24	0.3	17	19	RNA 6902 UU
17	-	LRTZ 172214	15.5	17	22	14	0.3	19	21	RNA 4903 RNAF 223013
	-	LRTZ 172224	26.5	17	22	24	0.3	19	21	RNA 6903
20	-	LRTZ 202518	24	20	25	18	0.3	22	24	RNA 4904 UU
	-	LRTZ 202531	41.5	20	25	31	0.3	22	24	RNA 6904 UU
25	-	LRTZ 253018	29.5	25	30	18	0.3	27	29	RNA 4905 UU
	-	LRTZ 253031	51	25	30	31	0.3	27	29	RNA 6905 UU
28	-	LRTZ 283231	44	28	32	31	0.3	30	31	RNA 69/28 UU
30	-	LRTZ 303518	35	30	35	18	0.3	32	34	RNA 4906 UU
	-	LRTZ 303531	61	30	35	31	0.3	32	34	RNA 6906 UU
32	-	LRTZ 324021	72.5	32	40	21	0.6	36	39	RNA 49/32 UU
	-	LRTZ 324037	130	32	40	37	0.6	36	39	RNA 69/32 UU
35	-	LRTZ 354221	67	35	42	21	0.6	39	41	RNA 4907 UU
	-	LRTZ 354237	120	35	42	37	0.6	39	41	RNA 6907 UU
40	-	LRTZ 404823	95	40	48	23	0.6	44	47	RNA 4908 UU
	-	LRTZ 404841	170	40	48	41	0.6	44	47	RNA 6908 UU
45	-	LRTZ 455223	93	45	52	23	0.6	49	51	RNA 4909 UU
50	-	LRTZ 505823	118	50	58	23	0.6	54	57	RNA 4910 UU
	-	LRTZ 505841	215	50	58	41	0.6	54	57	RNA 6910 UU
55	-	LRTZ 556346	260	55	63	46	1	60	61	RNA 6911 UU
60	-	LRTZ 606826	160	60	68	26	1	65	66	RNA 4912 UU

Every effort has been taken to ensure that the data listed in this catalogue is correct.
Finer Power Transmissions P/L will not accept liability for any damage or loss caused as a result of the data in this catalogue.

LRB Series

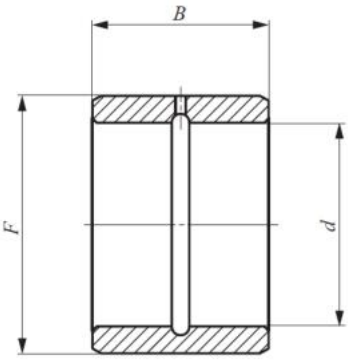

LRB

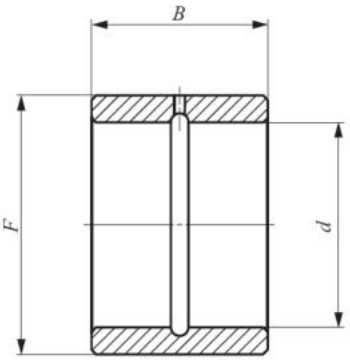

LRBZ···B

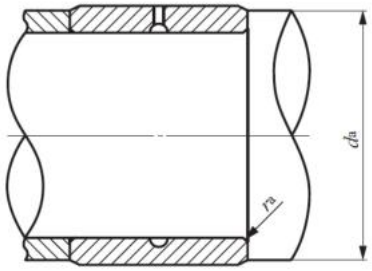

Shaft dia. (inch)	Identification number	Mass (Ref.) g	Boundary dimensions mm (inch)			Standard mounting dimensions mm			Assembled bearings*
			d	F	B	da Min	da Max	ras max	
3/8	LRB 61012	18.5	9.525 (3/8)	15.875 (5/8)	19.05 (3/4)	14	14.5	0.6	GBR 101812
1/2	LRB 81212	23.5	12.7 (1/2)	19.05 (3/4)	19.05 (3/4)	17.5	18	0.6	GBR 122012
	LRB 81216	31	12.7 (1/2)	19.05 (3/4)	25.8 (1 1/64)	17.5	18	0.6	GBR 122016UU
5/8	LRB 101412	28	15.875 (5/8)	22.225 (7/8)	19.05 (3/4)	21	21.2	1	BR 142212
	LRB 101416	37.5	15.875 (5/8)	22.225 (7/8)	25.8 (1 1/64)	21	21.2	1	BR 142216
3/4	LRB 121612	33	19.05 (3/4)	25.4 (1)	19.05 (3/4)	24	24.4	1	BR 162412
	LRB 121616	44	19.05 (3/4)	25.4 (1)	25.8 (1 1/64)	24	24.4	1	BR 162416
7/8	LRB 141816	50	22.225 (7/8)	28.575 (1 1/8)	25.8 (1 1/64)	27	27.5	1	BR 182616
	LRB 141820	62	22.225 (7/8)	28.575 (1 1/8)	31.75 (1 1/4)	27	27.5	1	BR 182620
1	LRB 162016	56	25.4 (1)	31.75 (1 1/4)	25.8 (1 1/64)	30.5	30.7	1	BR 202816
	LRB 162020	72	25.4 (1)	31.75 (1 1/4)	31.75 (1 1/4)	30.5	30.7	1	BR 202820
1 1/8	LRB 182216	63	28.575 (1 1/8)	34.925 (1 3/8)	25.8 (1 1/64)	33.5	33.9	1	BR 223016
	LRB 182220	77	28.575 (1 1/8)	34.925 (1 3/8)	31.75 (1 1/4)	33.5	33.9	1	BR 223020
1 1/4	LRB 202416	71	31.75 (1 1/4)	38.1 (1 1/2)	25.8 (1 1/64)	37	37.1	1.5	BR 243316
	LRB 202420	86	31.75 (1 1/4)	38.1 (1 1/2)	31.75 (1 1/4)	37	37.1	1.5	BR 243320
1 3/8	LRB 222616	77	34.925 (1 3/8)	41.275 (1 5/8)	25.8 (1 1/64)	40.2	40.2	1.5	BR 263516
	LRB 222620	96	34.925 (1 3/8)	41.275 (1 5/8)	31.75 (1 1/4)	40.2	40.2	1.5	BR 263520
1 1/2	LRB 242816	80	38.1 (1 1/2)	44.45 (1 3/4)	25.8 (1 1/64)	43.3	43.4	1.5	BR 283716
	LRB 242820	100	38.1 (1 1/2)	44.45 (1 3/4)	31.75 (1 1/4)	43.3	43.4	1.5	BR 283720 BR 283820
	LRB 243020	155	38.1 (1 1/2)	44.45 (1 3/4)	31.75 (1 1/4)	43.3	45	1.5	BR 303920
1 5/8	LRB 263216	135	41.275 (1 5/8)	50.8 (2)	25.8 (1 1/64)	48	49	1.5	BR 324116
	LRB 263220	170	41.275 (1 5/8)	50.8 (2)	31.75 (1 1/4)	48	49	1.5	BR 324120
1 3/4	LRB 283624	300	44.45 (1 3/4)	51.75 (2 1/4)	38.1 (1 1/2)	52.5	55	1.5	BR 364824
	LRB 283628	345	44.45 (1 3/4)	51.75 (2 1/4)	44.45 (1 3/4)	52.5	55	1.5	BR 364828
2	LRB 324024	335	50.8 (2)	63.5 (2 1/2)	38.1 (1 1/2)	58	61	2	BR 405224
	LRB 324028	390	50.8 (2)	63.5 (2 1/2)	44.45 (1 3/4)	58	61	2	BR 405228

* Not a stocked range although available on request.

Every effort has been taken to ensure that the data listed in this catalogue is correct.
Finer Power Transmissions P/L will not accept liability for any damage or loss caused as a result of the data in this catalogue.

LRB Series

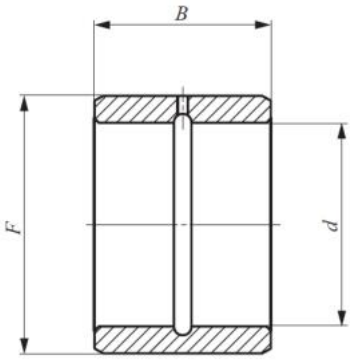

LRB

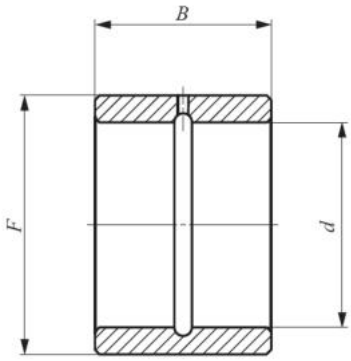

LRBZ···B

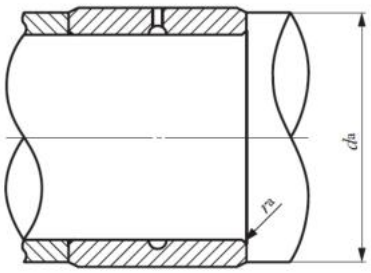

Shaft dia. (inch)	Identification number	Mass (Ref.) g	Boundary dimensions mm (inch)			Standard mounting dimensions mm			Assembled bearings*
			d	F	B	da Min	da Max	ras max	
2 1/4	LRB 364424	375	51.75 (2 1/4)	69.85 (2 3/4)	38.1 (1 1/2)	65	67	2	BR 445624
	LRB 364428	440	51.75 (2 1/4)	69.85 (2 3/4)	44.45 (1 3/4)	65	67	2	BR 445628
2 1/2	LRB 404824	410	63.5 (2 1/2)	76.2 (3)	38.1 (1 1/2)	71	73	2	BR 486024
	LRB 404828	480	63.5 (2 1/2)	76.2 (3)	44.45 (1 3/4)	71	73	2	BR 486028
2 3/4	LRB 445228	530	69.85 (2 3/4)	82.55 (3 1/4)	44.45 (1 3/4)	77	79	2	BR 526828
	LRB 445232	600	69.85 (2 3/4)	82.55 (3 1/4)	51.20 (2 1/64)	77	79	2	BR 526832
3	LRB 485632	640	76.2 (3)	88.9 (3 1/2)	51.20 (2 1/64)	83.5	86	2	BR 567232
3 1/4	LRB 526032	690	82.55 (3 1/4)	95.25 (3 3/4)	51.20 (2 1/64)	91	93	2.5	BR 607632
3 1/2	LRB 566432	750	88.9 (3 1/2)	101.6 (4)	51.20 (2 1/64)	97	99	2.5	BR 648032

* Not a stocked range although available on request.

Every effort has been taken to ensure that the data listed in this catalogue is correct.
Finer Power Transmissions P/L will not accept liability for any damage or loss caused as a result of the data in this catalogue.

JAPANESE BEARINGS
Finer Power Transmissions P/L | www.finerpt.com
Needle Roller Bearings
Needle Roller Thrust Bearings

NTB Series & AS Washers To Suit

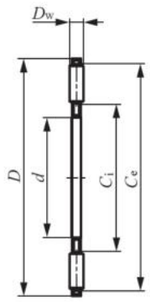

NTB

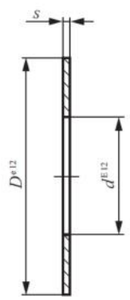

AS

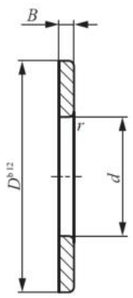

WS

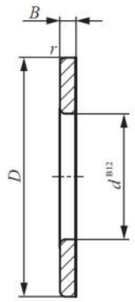

GS

NTB Series & AS Washers To Suit

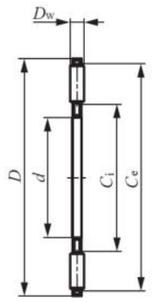

NTB

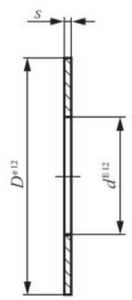

AS

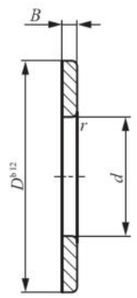

WS

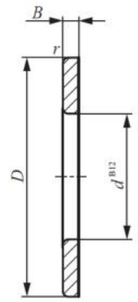

GS

Shaft dia. mm	Identification number	Mass (Ref.)	Thrust washer	Mass (Ref.)	Inner ring	Outer ring	Mass (Ref.)		Boundary dimensions mm								Basic dynamic load rating	Basic static load ratin	Allowable rotational speed(2
									d	D	Dw	s	B	rs min	C	Ce	C	Co	rpm
10	NTB 1024	3.3	AS 1024	2.9	WS 1024	GS 1024	8		10	24	2	1	2.75	0.3	14	22	7 820	23 900	15 000
12	NTB 1226	3.8	AS 1226	3.2	WS 1226	GS 1226	8.9		12	26	2	1	2.75	0.3	16	24	8 340	26 900	13 000
15	NTB 1528	4.1	AS 1528	3.4	WS 1528	GS 1528	9.3		15	28	2	1	2.75	0.3	18	26	8 830	29 900	12 000
16	NTB 1629	4.3	AS 1629	3.6	WS 1629	GS 1629	9.8		16	29	2	1	2.75	0.3	19	27	9 070	31 400	11 000
17	NTB 1730	4.5	AS 1730	3.7	WS 1730	GS 1730	10.2		17	30	2	1	2.75	0.3	20	28	9 320	32 900	11 000
20	NTB 2035	6.1	AS 2035	5	WS 2035	GS 2035	13.8		20	35	2	1	2.75	0.3	23	33	11 700	46 500	9 000
25	NTB 2542	8.2	AS 2542	6.9	WS 2542	GS 2542	21		25	42	2	1	3	0.6	29	40	14 400	64 700	7 500
30	NTB 3047	9.4	AS 3047	7.9	WS 3047	GS 3047	24		30	47	2	1	3	0.6	34	45	15 400	73 300	6 500
35	NTB 3552	10.6	AS 3552	8.9	WS 3552	GS 3552	31.5		35	52	2	1	3.5	0.6	39	50	16 300	81 900	5 500
40	NTB 4060	22	AS 4060	12.1	WS 4060	GS 4060	42.5		40	60	3	1	3.5	0.6	45	57	24 200	108 000	5 000
45	NTB 4565	24.5	AS 4565	13.3	WS 4565	GS 4565	53.5		45	65	3	1	4	0.6	50	62	25 900	121 000	4 500
50	NTB 5070	26.5	AS 5070	14.5	WS 5070	GS 5070	58.5		50	70	3	1	4	0.6	55	67	27 600	135 000	4 000
55	NTB 5578	33.5	AS 5578	18.5	WS 5578	GS 5578	93		55	78	3	1	5.00	0.6	61	75	32 400	171 000	4 000
60	NTB 6085	39.5	AS 6085	22	WS 6086	GS 6085	105		60	85	3	1	4.75	1	66	82	38 200	219 000	3 500
65	NTB 6590	41.5	AS 6590	23.5	WS 6590	GS 6590	124		65	90	3	1	5.25	1	71	87	40 100	237 000	3 000
70	NTB 7095	61	AS 7095	25	WS 7095	GS 7095	132		70	95	4	1	5.25	1	75	91	47 400	244 000	3 000
75	NTB 75100	65	AS 75100	26.5	WS 75100	GS 75100	153		75	100	4	1	5.75	1	80	96	48 400	256 000	3 000
80	NTB 80105	68.5	AS 80105	28	WS 80105	GS 80105	162		80	105	4	1	5.75	1	85	101	49 500	267 000	2 500
85	NTB 85110	72	AS 85110	29.5	WS 85110	GS 85110	170		85	110	4	1	5.75	1	90	106	50 300	279 000	2 500
90	NTB 90120	92	AS 90120	38	WS 90120	GS 90120	250		90	120	4	1	6.5	1	96	116	64 50	394 000	2 500

Every effort has been taken to ensure that the data listed in this catalogue is correct.
Finer Power Transmissions P/L will not accept liability for any damage or loss caused as a result of the data in this catalogue.
Every effort has been taken to ensure that the data listed in this catalogue is correct.
Finer Power Transmissions P/L will not accept liability for any damage or loss caused as a result of the data in this catalogue.

JAPANESE BEARINGS
Finer Power Transmissions P/L | www.finerpt.com
Needle Roller Bearings
Thrust Needle Roller & Cage Assembly

AZK Series & Outer (GS) & Inner (WS) Rings To Suit

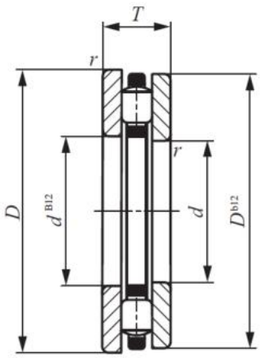

AZ

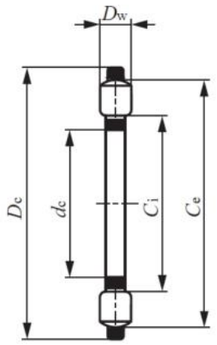

AZK

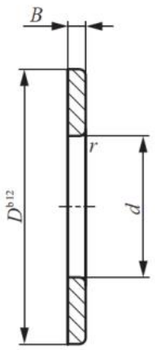

WS

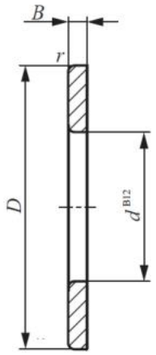

GS

AZK Series & Outer (GS) & Inner (WS) Rings To Suit

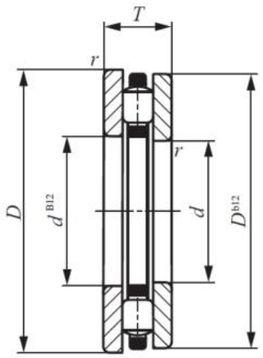

AZ

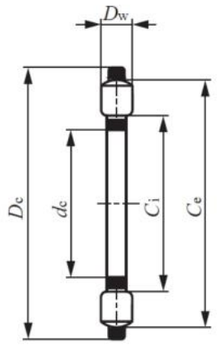

AZK

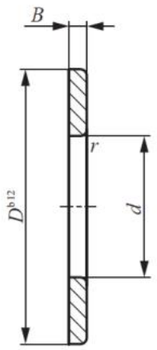

WS

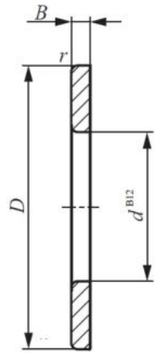

GS

Shaft dia. mm	Identification number								Boundary dimensions mm										Standard mounting dimensions mm		Basic dynamic load rating C	Basic static load rating CO N	Allowable rotational speed(2) rpm
	Thrust roller bearing*	Mass (Ref.)	Cage & Roller Assembly	Mass (Ref.)	Inner ring	Outer ring	Mass (Ref.)		d	D	T	dc	Dc	Dw	B	rsmin	Ci	Ce	da Min.	Da Max.			
12	AZ 12269	26.5	AZK 12263.5	8.7	WS 1226	GS 1226	8.9		12	26	9	12.04	25.60	3.5	2.75	0.3	15	23	23	16	10 400	23 900	16 000
17	AZ 17309	30.5	AZK 17303.5	10.1	WS 1730	GS 1730	10.2		17	30	9	17.04	29.6	3.5	2.75	0.3	19	27	27	20	11 400	28 600	13 000
20	AZ 203510	45.5	AZK 20354.5	17.9	WS 2035	GS 2035	13.8		20	35	10	20.04	34.60	4.5	2.75	0.3	22	33	33	23	19 000	48 700	11 000
25	AZ 254211	70	AZK 25425	28	WS 2542	GS 2542	21		25	42	11	25.05	41.6	5	3	0.6	28	39	39	28	22 700	60 700	9 000
30	AZ 304711	79	AZK 30475	31	WS 3047	GS 3047	24		30	47	11	30.05	46.5	5	3	0.6	33	44	44	33	27 400	81 000	8 000
	AZ 305216	160	AZK 30527.5	70	WS 3052	GS 3052	45		30	52	16	30.05	51.5	7.5	4.25	0.6	35	49	48	36	38 400	95 700	7 500
35	AZ 356218	260	AZK 35627.5	98	WS 3562	GS 3562	81		35	62	18	35.05	61.5	7.5	5.25	1	42	58	57	43	47 900	135 000	6 500
40	AZ 406819	310	AZK 40689	132	WS 4068	GS 4068	89		40	68	19	40.05	67.5	9	5	1	45	64	64	46	68 700	195 000	5 500
45	AZ 456514	169	AZK 45656	62	WS 4565	GS 4565	53.5		45	65	14	45.05	64.5	6	4	0.6	49	62	62	49	40 800	133 000	5 500
	AZ 457320	360	AZK 45739	144	WS 4573	GS 4573	108		45	73	20	45.05	72.5	9	5.5	1	50	69	69	51	75 700	227 000	5 000
50	AZ 507014	185	AZK 50706	68	WS 5070	GS 5070	58.5		50	70	14	50.05	69.5	6	4	0.6	54	67	67	54	43 300	148 000	5 000
	AZ 507822	430	AZK 507811	194	WS 5078	GS 5078	108		50	78	22	50.05	77.5	9	5.5	1	50	69	69	51	75 700	227 000	5 000
55	AZ 559025	725	AZK 559011	275	WS 5590	GS 5590	225		55	90	25	55.05	89.5	11	7	1	63	85	84	63	108 000	332 000	4 000
60	AZ 608517	345	AZK 60857.5	135	WS 6085	GS 6085	105		60	85	17	60.05	84.5	7.5	4.75	1	65	81	81	66	64 600	224 000	4 000
	AZ 609526	770	AZK 609511	290	WS 6095	GS 6095	240		60	95	26	60.05	94.5	11	7.5	1	68	90	89	68	106 000	332 000	4 000
65	AZ 659018	380	AZK 65907.5	132	WS 6590	GS 6590	124		65	90	18	65.05	89.5	7.5	5.25	1	70	86	86	71	68 300	247 000	4 000
	AS 6510027	860	AZK 6510011	310	WS 65100	GS 65100	275		65	100	27	65.05	99.5	11	8	1	73	95	94	73	116 000	379 000	3 500
70	AZ 7010527	905	AZK 7010511	325	WS 70105	GS 70105	290		70	105	27	70.05	104.5	11	8	1	78	100	99	78	114 000	379 000	3 500
75	AZ 7510019	465	AZK 751007.5	159	WS 75100	GS 75100	153		75	100	19	75.05	99.5	7.5	5.75	1	80	96	96	81	71 100	269 000	3 500
80	AZ 8011528	1 060	AZK 8011511	370	WS 80115	GS 80115	345		80	115	28	80.05	114.5	11	8.5	1	88	110	109	88	122 000	427 000	3 000

* Not a stocked range although available on request

Every effort has been taken to ensure that the data listed in this catalogue is correct.
Finer Power Transmissions P/L will not accept liability for any damage or loss caused as a result of the data in this catalogue.

Every effort has been taken to ensure that the data listed in this catalogue is correct.
Finer Power Transmissions P/L will not accept liability for any damage or loss caused as a result of the data in this catalogue.

JAPANESE BEARINGS
Finer Power Transmissions P/L | www.finerpt.com
Needle Roller Bearings
Combined Needle Roller Bearings

NATA/NATB Series

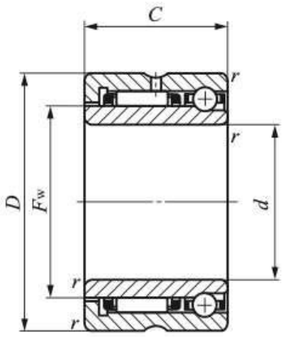

NATA59

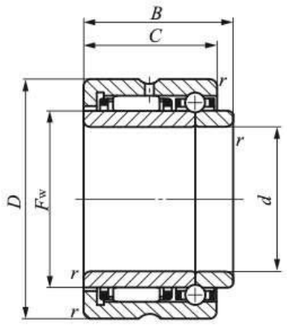

NATB59

NATA/NATB Series

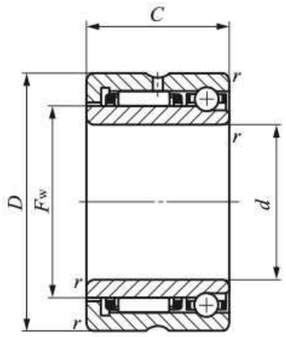

NATA59

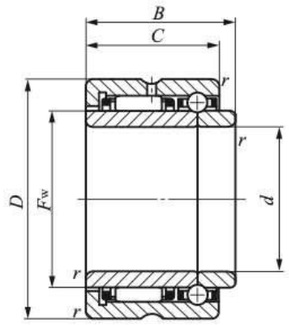

NATB59

Shaft dia. mm	Identification number				Boundary dimensions mm							Standard mounting dimensions (mm)		Basic dynamic load rating C		Basic static load rating Co		Allowable rotational speed(2) rpm
	Angular contact type	Mass (Ref.) g	Three-point contact type	Mass (Ref.) g	d	D	C	B	r a min	Fw		da Min.	Da Max.	Radial N	Axial N	Radial N	Axial N	
15	NATA 5902	50.5	NATB 5902	53	15	28	18	20	0.3	20		17	26	7 710	1 900	10 200	2 920	20 000
17	NATA 5903	55.5	NATB 5903	58.5	17	30	18	20	0.3	22		19	28	8 220	2 050	11 500	3 340	18 000
20	NATA 5904	111	NATB 5904	115	20	37	23	25	0.3	25		22	35	14 300	3 810	18 400	6 110	16 000
25	NATA 5905	131	NATB 5905	136	25	42	23	25	0.3	30		27	40	15 800	4 300	22 100	7 520	13 000
30	NATA 5906	151	NATB 5906	157	30	47	23	25	0.3	35		32	45	17 700	4 550	26 800	8 460	11 000
35	NATA 5907	250	NATB 5907	260	35	55	27	30	0.6	42		39	51	24 000	4 890	42 100	9 870	9 500
40	NATA 5908	355	NATB 5908	375	40	62	30	34	0.6	48		44	58	30 600	5 350	60 400	11 800	8 500
45	NATA 5909	410	NATB 5909	435	45	68	30	34	0.6	55		49	64	32 600	5 450	68 500	12 700	7 000
50	NATA 5910	420	NATB 5910	445	50	72	30	34	0.6	58		54	68	33 600	5 660	72 500	13 600	7 000
55	NATA 5911	585	NATB 5911	615	55	80	34	38	1	63		60	75	39 500	10 400	74 400	24 700	6 500
60	NATA 5912	625	NATB 5912	660	60	85	34	38	1	68		65	80	41 800	10 700	82 200	26 700	6 000
65	NATA 5913	665	NATB 5913	710	65	90	34	38	1	75		70	85	43 800	11 000	90 200	28 700	5 500

Every effort has been taken to ensure that the data listed in this catalogue is correct.
Finer Power Transmissions P/L will not accept liability for any damage or loss caused as a result of the data in this catalogue.
Every effort has been taken to ensure that the data listed in this catalogue is correct.
Finer Power Transmissions P/L will not accept liability for any damage or loss caused as a result of the data in this catalogue.

KT Cage Series

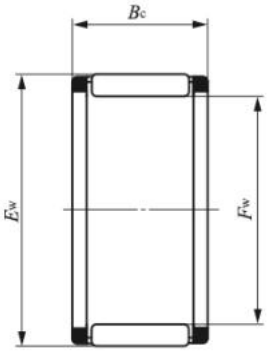

KT

Shaft dia. mm	Identification number	Mass (Ref.) g	Boundary dimensions mm			Basic dynamic load rating C N	Basic static load rating C0 N	Allowable rotational speed (1) rpm
			Fw	Ew	Bc			
10	KT 101310	2.3	10	13	10	4 160	4 550	50 000
	KT 101410	3.2	10	14	10	4 900	4 680	50 000
	KT 101415	4.8	10	14	15	7 080	7 520	50 000
12	KT 121613	5.2	12	16	13	7 020	7 800	40 000
14	KT 141810	4.6	14	18	10	6 320	7 110	35 000
15	KT 151917	8.2	15	19	17	10 900	14 600	35 000
17	KT 172117	9.3	17	21	17	11 800	16 900	30 000
18	KT 182213	7.6	18	22	13	9 330	12 700	30 000
20	KT 202413	8.3	20	24	13	9 590	13 500	25 000
	KT 202617	17	20	26	17	16 800	21 200	25 000
	KT 202620	20.5	20	26	20	18 700	24 400	25 000
	KT 202624	24	20	26	24	22 500	30 900	25 000
	KT 202820	29	20	28	20	21 500	24 200	25 000
22	KT 222613	9.1	22	26	13	10 200	15 200	25 000
	KT 222617	11.6	22	26	17	13 500	21 600	25 000
	KT 222916	21	22	29	16	17 600	20 900	25 000
25	KT 252910	7.9	25	29	10	8 940	13 300	20 000
	KT 252913	10.3	25	29	13	11 100	17 600	20 000
	KT 253120	25	25	31	20	21 200	30 500	20 000
	KT 253525	48	25	35	25	32 500	37 900	20 000
28	KT 283327	29	28	33	27	26 300	47 300	18 000
30	KT 303517	20	30	35	17	18 700	31 100	17 000
	KT 303524	28.5	30	35	24	24 900	45 100	17 000
	KT 303716	27.5	30	37	16	20 800	28 400	17 000
32	KT 323717	21.5	32	37	17	19 600	33 900	16 000
35	KT 354026	34.5	35	40	26	28 700	56 800	14 000
	KT 354220	40.5	35	42	20	27 400	42 300	14 000
	KT 354230	59	35	42	30	40 600	70 300	14 000
38	KT 384632	80	38	46	32	45 400	75 700	13 000
40	KT 404513	20.5	40	45	13	16 800	29 800	12 000
	KT 404517	26.5	40	45	17	22 200	42 700	12 000
	KT 404527	41	40	45	27	32 400	69 200	12 000
	KT 404820	52.5	40	48	20	31 400	48 000	12 000
	KT 404825	64.5	40	48	25	39 300	64 000	12 000

Note. (1) Allowable rotational speed applied to oil lubrication. For grease lubrication, a maximum of 60% of this value is allowable.

Every effort has been taken to ensure that the data listed in this catalogue is correct.
Finer Power Transmissions P/L will not accept liability for any damage or loss caused as a result of the data in this catalogue.

KT Cage Series

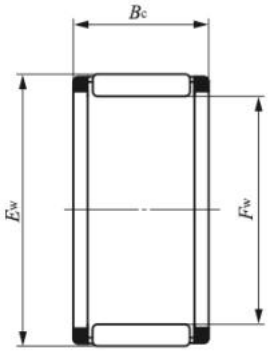

KT

Shaft dia. mm	Identification number	Mass (Ref.) g	Boundary dimensions mm			Basic dynamic load rating C N	Basic static load rating C0 N	Allowable rotational speed (1) rpm
			Fw	Ew	Bc			
45	KT 455017	29.5	45	50	17	23 300	47 100	11 000
	KT 455027	46	45	50	27	34 800	79 000	11 000
	KT 455320	58	45	53	20	33 200	53 300	11 000

Note. (1) Allowable rotational speed applied to oil lubrication. For grease lubrication, a maximum of 60% of this value is allowable.

Every effort has been taken to ensure that the data listed in this catalogue is correct.
Finer Power Transmissions P/L will not accept liability for any damage or loss caused as a result of the data in this catalogue.

JAPANESE BEARINGS
Finer Power Transmissions P/L | www.finerpt.com
Cam Followers - Metric & Imperial

CF Series - Cage Type

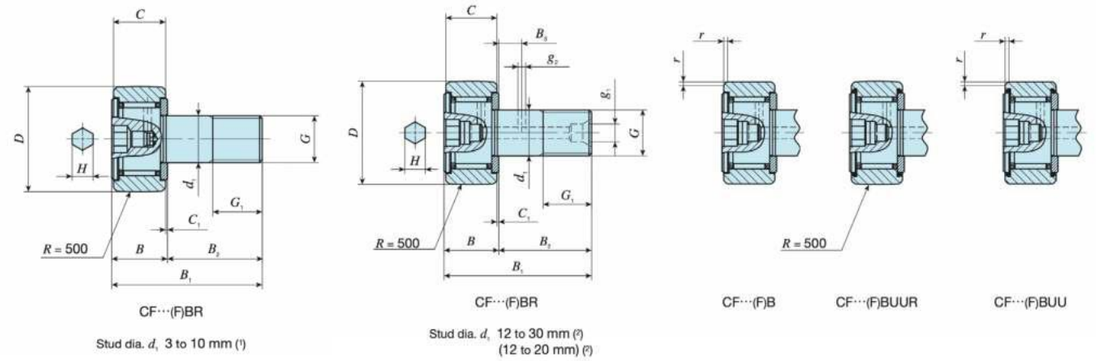

CF Series - Cage Type

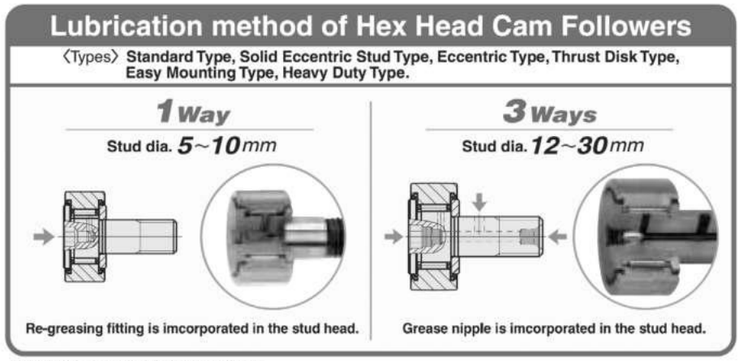

Remark : All of Easy Mounting Type are 1way port.

Stud dia. mm	Identification number: Shield type, With crowned outer ring*	Shield type, With cylindrical outer ring*	Sealed type, With crowned outer ring	Sealed type, With cylindrical outer ring	Mass (Ref.) g	D	C	d1	G		G1	B	B1	B2	B3	C1	g1	g2	H	rs min	Mounting dimension f Min. mm	Maximum tightening torque N-m	Basic dynamic load rating C N	Basic static load rating C0 N	Maximum allowable static load N
3	CF 3 BR	CF 3 B	CF 3 BUUR	CF 3 BUU	4.3	10	7	3	M 3×0.5		5	8	17	9	-	0.5	-	-	2	0.2	6.8	0.34	1 500	1 020	384
4	CF 4 BR	CF 4 B	CF 4 BUUR	CF 4 BUU	7.4	12	8	4	M 4×0.7		6	9	20	11	-	0.5	-	-	2.5	0.3	8.3	0.78	2 070	1 590	834
5	CF 5 BR	CF 5 B	CF 5 BUUR	CF 5 BUU	10.3	13	9	5	M 5×0.8		7.5	10	23	13	-	0.5	-	-	3	0.3	9.3	1.6	2 520	2 140	1 260
6	CF 6 BR	CF 6 B	CF 6 BUUR	CF 6 BUU	18.5	16	11	6	M 6×1		8	12.2max	28.2max	16	-	0.6	-	-	3	0.3	11	2.7	3 660	3 650	1 950
8	CF 8 BR	CF 8 B	CF 8 BUUR	CF 8 BUU	28.5	19	11	8	M 8×1.25		10	12.2max	32.2max	20	-	0.6	-	-	4	0.3	13	6.5	4 250	4 740	4 620
10	CF 10-1 BR	CF 10-1 B	CF 10-1 BUUR	CF 10-1 BUU	60	26	12	10	M10×1.25		12	13.2max	36.2max	23	-	0.6	-	-	4	0.3	16	13.8	5 430	6 890	6 890
	CF 10 BR	CF 10 B	CF 10 BUUR	CF 10 BUU	45	22	12	10	M10×1.25		12	13.2max	36.2max	23	-	0.6	-	-	4	0.3	16	13.8	5 430	6 890	6 890
12	CF 12-1 BR	CF 12-1 B	CF 12-1 BUUR	CF 12-1 BUU	105	32	14	12	M12×1.5		13	15.2max	40.2max	25	6	0.6	6	3	6	0.6	21	21.9	7 910	9 790	9 790
	CF 12 BR	CF 12 B	CF 12 BUUR	CF 12 BUU	95	30	14	12	M12×1.5		13	15.2max	40.2max	25	6	0.6	6	3	6	0.6	21	21.9	7 910	9 790	9 790
16	CF 16 BR	CF 16 B	CF 16 BUUR	CF 16 BUU	170	35	18	16	M16×1.5		17	19.6max	52.1max	32.5	8	0.8	6	3	6	0.6	26	58.5	12 000	18 300	18 300
18	CF 18 BR	CF 18 B	CF 18 BUUR	CF 18 BUU	250	40	20	18	M18×1.5		19	21.6max	58.1max	36.5	8	0.8	6	3	8	1	29	86.2	14 800	25 200	25 200
20	CF 20-1 BR	CF 20-1 B	CF 20-1 BUUR	CF 20-1 BUU	385	47	24	20	M20×1.5		21	25.6max	66.1max	40.5	9	0.8	8	4	8	1	34	119	20 700	34 600	34 600
	CF 20 BR	CF 20 B	CF 20 BUUR	CF 20 BUU	460	52	24	20	M20×1.5		21	25.6max	66.1max	40.5	9	0.8	8	4	8	1	34	119	20 700	34 600	34 600
24	CF 24-1 BR	CF 24-1 B	CF 24-1 BUUR	CF 24-1 BUU	1 140	72	29	24	M24×1.5		25	30.6max	80.1max	49.5	11	0.8	8	4	12	1	40	215	30 500	52 600	52 000
	CF 24 BR	CF 24 B	CF 24 BUUR	CF 24 BUU	815	62	29	24	M24×1.5		25	30.6max	80.1max	49.5	11	0.8	8	4	12	1	40	215	30 500	52 600	52 000
30	CF 30-1 BR	CF 30-1 B	CF 30-1 BUUR	CF 30-1 BUU	2 030	85	35	30	M30×1.5		32	37 max	100 max	63	15	1	8	4	17	1	49	438	45 400	85 100	85 100
	CF 30-2 BR	CF 30-2 B	CF 30-2 BUUR	CF 30-2 BUU	2 220	90	35	30	M30×1.5		32	37 max	100 max	63	15	1	8	4	17	1	49	438	45 400	85 100	85 100
	CF 30 BR	CF 30 B	CF 30 BUUR	CF 30 BUU	1 870	80	35	30	M30×1.5		32	37 max	100 max	63	15	1	8	4	17	1	49	438	45 400	85 100	85 100

* Not a stocked range although available on request

GUIDE
B = Hex
No B = Slotted (Screwdriver)
UU = 2 Rubber Seals
R = Crowned / Spherical
No R = Cylindrical
V = Full Compliment
No V = Caged

Every effort has been taken to ensure that the data listed in this catalogue is correct.
Finer Power Transmissions P/L will not accept liability for any damage or loss caused as a result of the data in this catalogue.
Every effort has been taken to ensure that the data listed in this catalogue is correct.
Finer Power Transmissions P/L will not accept liability for any damage or loss caused as a result of the data in this catalogue.

JAPANESE BEARINGS
Finer Power Transmissions P/L | www.finerpt.com
Cam Followers - Metric & Imperial

CF Series - Full Complement

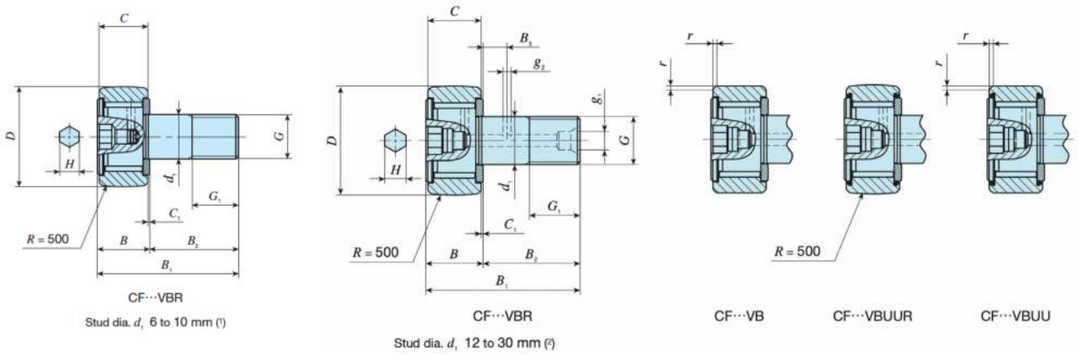

CF Series - Full Complement

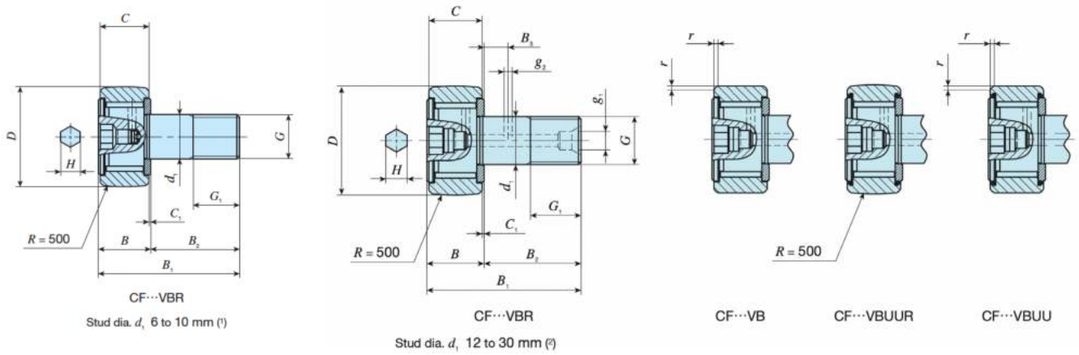

Stud dia. mm	Identification number: Shield type, With crowned outer ring*	Shield type, With cylindrical outer ring*	Sealed type, With crowned outer ring	Sealed type, With cylindrical outer ring	Mass (Ref.) g	Boundary dimensions mm: D	C	d1		G	G1	Bmax	B1 max	B2	B3	C1	g1	g2	H	rs min	Mounting dimension f Min. mm	Maximum tightening torque N-m	Basic dynamic load rating C N	Basic static load rating C0 N	Maximum allowable static load N
6	CF 6 VBR	CF 6 VB	CF 6 VBUUR	CF 6 VBUU	19	16	11	6		M6×1	8	12.2	28.2	16	-	0.6	-	-	3	0.3	11	2.7	6 980	8 500	1 950
8	CF 8 VBR	CF 8 VB	CF 8 VBUUR	CF 8 VBUU	29	19	11	8		M8×1.25	10	12.2	32.2	20	-	0.6	-	-	4	0.3	13	6.5	8 170	11 200	4 620
10	CF 10-1 VBR	CF 10-1 VB	CF 10-1 VBUUR	CF 10-1 VBUU	61	26	12	10		M10×1.25	12	13.2	36.2	23	-	0.6	-	-	4	0.3	16	13.8	9 570	14 500	8 650
	CF 10 VBR	CF 10 VB	CF 10 VBUUR	CF 10 VBUU	46	22	12	10		M10×1.25	12	13.2	36.2	23	-	0.6	-	-	4	0.3	16	13.8	9 570	14 500	8 650
12	CF 12-1 VBR	CF 12-1 VB	CF 12-1 VBUUR	CF 12-1 VBUU	107	32	14	12		M12×1.5	13	15.2	40.2	25	6	0.6	6	3	6	0.6	21	21.9	13 500	19 700	13 200
	CF 12 VBR	CF 12 VB	CF 12 VBUUR	CF 12 VBUU	97	30	14	12		M12×1.5	13	15.2	40.2	25	6	0.6	6	3	6	0.6	21	21.9	13 500	19 700	13 200
16	CF 16 VBR	CF 16 VB	CF 16 VBUUR	CF 16 VBUU	173	35	18	16		M16×1.5	17	19.6	52.1	32.5	8	0.8	6	3	6	0.6	26	58.5	20 700	37 600	23 200
18	CF 18 VBR	CF 18 VB	CF 18 VBUUR	CF 18 VBUU	255	40	20	18		M18×1.5	19	21.6	58.1	36.5	8	0.8	6	3	8	1	29	86.2	25 300	51 300	31 100
20	CF 20-1 VBR	CF 20-1 VB	CF 20-1 VBUUR	CF 20-1 VBUU	390	47	24	20		M20×1.5	21	25.6	66.1	40.5	9	0.8	8	4	8	1	34	119	33 200	64 500	37 500
	CF 20 VBR	CF 20 VB	CF 20 VBUUR	CF 20 VBUU	465	52	24	20		M20×1.5	21	25.6	66.1	40.5	9	0.8	8	4	8	1	34	119	33 200	64 500	37 500
24	CF 24-1 VBR	CF 24-1 VB	CF 24-1 VBUUR	CF 24-1 VBUU	1 140	72	29	24		M24×1.5	25	30.6	80.1	49.5	11	0.8	8	4	12	1	40	215	46 600	92 000	52 000
	CF 24 VBR	CF 24 VB	CF 24 VBUUR	CF 24 VBUU	820	62	29	24		M24×1.5	25	30.6	80.1	49.5	11	0.8	8	4	12	1	40	215	46 600	92 000	52 000
30	CF 30-1 VBR	CF 30-1 VB	CF 30-1 VBUUR	CF 30-1 VBUU	2 030	85	35	30		M30×1.5	32	37	100	63	15	1	8	4	17	1	49	438	67 700	144 000	85 900
	CF 30-2 VBR	CF 30-2 VB	CF 30-2 VBUUR	CF 30-2 VBUU	2 220	90	35	30		M30×1.5	32	37	100	63	15	1	8	4	17	1	49	438	67 700	144 000	85 900
	CF 30 VBR	CF 30 VB	CF 30 VBUUR	CF 30 VBUU	1 870	80	35	30		M30×1.5	32	37	100	63	15	1	8	4	17	1	49	438	67 700	144 000	85 900

* Not a stocked range although available on request.

GUIDE
B = Hex
No B = Slotted (Screwdriver)
UU = 2 Rubber Seals
R = Crowned / Spherical
No R = Cylindrical
V = Full Compliment
No V = Caged

Every effort has been taken to ensure that the data listed in this catalogue is correct.
Finer Power Transmissions P/L will not accept liability for any damage or loss caused as a result of the data in this catalogue.
Every effort has been taken to ensure that the data listed in this catalogue is correct.
Finer Power Transmissions P/L will not accept liability for any damage or loss caused as a result of the data in this catalogue.

JAPANESE BEARINGS
Finer Power Transmissions P/L | www.finerpt.com
Cam Followers - Metric & Imperial

CR Series

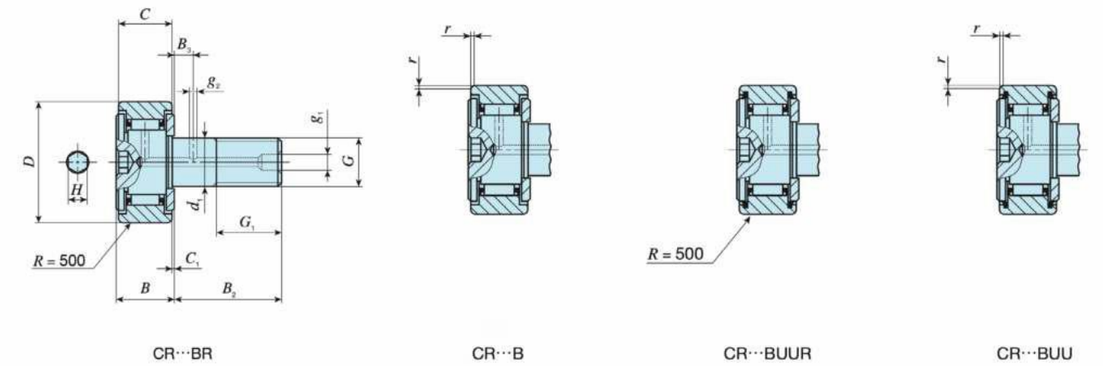

CR Series

Lubrication method of Hex Head Cam Followers

〈Types〉 Standard Type, Solid Eccentric Stud Type, Eccentric Type, Thrust Disk Type, Easy Mounting Type, Heavy Duty Type.

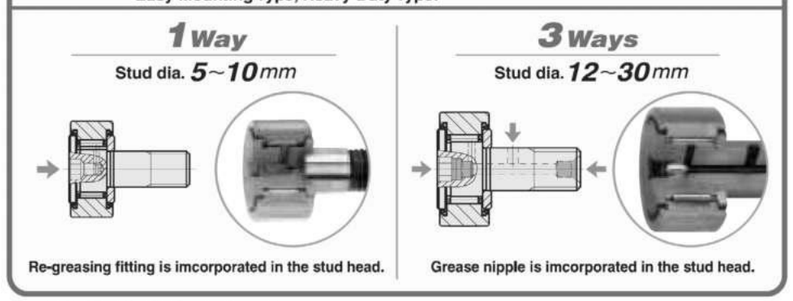

Remark : All of Easy Mounting Type are 1way port.

Stud dia. inch	Identification number: Shield type: With crowned outer ring*	Shield type: With cylindrical outer ring*	Sealed type: With crowned outer ring	Sealed type: With cylindrical outer ring	Mass (Ref.) g	Dimensions (inch): D	C	d1	G UNF	G1		Dimensions (inch): Bmax	B2	B3	C1	g1	g2	H	r	Mounting dimension f Min. (inch)	Maximum tightening torque N-m	Basic dynamic load rating C N	Basic static load rating C0 N
3/16	CR 8-1 BR	CR 8-1 B	CR 8-1 BUUR	CR 8-1 BUU	10	1/2	3/8	4.826	No.10-32	1/4		0.43	5/8	-	1/32	-	-	1/8	1/64	21/64	1.4	2 520	2 140
	CR 8-1 VBR	CR 8-1VB	CR 8-1 VBUUR	CR 8-1 VBUU	10	1/2	3/8	4.826	No.10-32	1/4		0.43	5/8	-	1/32	-	-	1/8	1/64	21/64	1.4	4 710	5 410
	CR 8-1 R	CR 8-1	CR 8-1 UUR	CR 8-1 UU	10	1/2	3/8	4.826	No.10-32	1/4		0.43	5/8	-	1/32	1/8	-	-	1/64	21/64	1.4	2 520	2 140
	CR 8-1 VR	CR 8-1 V	CR 8-1 VUUR	CR 8-1 VUU	10	1/2	3/8	4.826	No.10-32	1/4		0.43	5/8	-	1/32	1/8	-	-	1/64	21/64	1.4	4 710	5 410
3/16	CR 8 VBR	CR 8 VB	CR 8 VBUUR	CR 8 VBUU	9	1/2	11/32	4.826	No.10-32	1/4		0.4	1/2	-	1/32	3/16	-	1/8	1/64	21/64	1.4	4 260	4 750
	CR 8 BR	CR 8 B	CR 8 BUUR	CR 8 BUU	9	1/2	11/32	4.826	No.10-32	1/4		0.4	1/2	-	1/32	-	-	1/8	1/64	21/64	1.4	2 520	2 140
1/4	CR 10-1 VBR	CR 10-1VB	CR 10-1 VBUUR	CR 10-1 VBUU	21	5/8	7/16	1/4	1/4 - 28	5/16		0.49	3/4	-	1/32	-	-	1/8	1/64	29/64	3.4	6 340	8 530
	CR 10 VBR	CR 10 VB	CR 10 VBUUR	CR 10 VBUU	19	5/8	13/32	1/4	1/4 - 28	5/16		0.46	5/8	-	1/32	-	-	1/8	1/64	29/64	3.4	5 830	7 660
	CR 10-1 BR	CR 10-1 B	CR 10-1 BUUR	CR 10-1 BUU	21	5/8	7/16	1/4	1/4 - 28	5/16		0.49	3/4	-	1/32	-	-	1/8	1/64	29/64	3.4	3 650	3 670
	CR 10 BR	CR 10 B	CR 10 BUUR	CR 10 BUU	19	5/8	13/32	1/4	1/4 - 28	5/16		0.46	5/8	-	1/32	-	-	1/8	1/64	29/64	3.4	3 650	3 670
3/8	CR 12 VBR	CR 12 VB	CR 12 VBUUR	CR 12 VBUU	36	3/4	1/2	3/8	3/8 -24	3/8		0.56	7/8	1/4	1/32	3/16	3/32	3/16	1/32	17/32	10.8	8 710	12 300
	CR 12 BR	CR 12 B	CR 12 BUUR	CR 12 BUU	35	3/4	1/2	3/8	3/8 -24	3/8		0.56	7/8	1/4	1/32	3/16	3/32	3/16	1/32	17/32	10.8	4 420	5 110
	CR 12 R	CR 12	CR 12 UUR	CR 12 UU	35	3/4	1/2	3/8	3/8 -24	3/8		0.56	7/8	1/4	1/32	3/16	3/32	-	1/32	17/32	10.8	4 420	5 110
	CR 14 BR	CR 14 B	CR 14 BUUR	CR 14 BUU	46	7/8	1/2	3/8	3/8 -24	3/8		0.56	7/8	1/4	1/32	3/16	3/32	3/16	1/32	19/32	10.8	4 790	5 810
	CR 14 VBR	CR 14 VB	CR 14 VBUUR	CR 14 VBUU	47	7/8	1/2	3/8	3/8 -24	3/8		0.56	7/8	1/4	1/32	3/16	3/32	3/16	1/32	19/32	10.8	8 710	12 300
7/16	CR 16 VBR	CR 16 VB	CR 16 VBUUR	CR 16 VBUU	74	1	5/8	7/16	7/16 -20	1/2		0.68	1	1/4	1/32	3/16	1/8	1/4	3/64	45/64	17.4	13 100	22 700
	CR 16 BR	CR 16 B	CR 16 BUUR	CR 16 BUU	73	1	5/8	7/16	7/16 -20	1/2		0.68	1	1/4	1/32	3/16	1/8	1/4	3/64	45/64	17.4	8 810	10 800
	CR 18 BR	CR 18 B	CR 18 BUUR	CR 18 BUU	88	1 1/8	5/8	7/16	7/16 -20	1/2		0.68	1	1/4	1/32	3/16	1/8	1/4	1/16	3/4	17.4	9 180	11 600
	CR 18 VBR	CR 18 VB	CR 18 VBUUR	CR 18 VBUU	85	1 1/8	5/8	7/16	7/16 -20	1/2		0.68	1	1/4	1/32	3/16	1/8	1/4	1/16	3/4	17.4	13 100	22 700
	CR 18 R	CR 18	CR 18 UUR	CR 18 UU	88	1 1/8	5/8	7/16	7/16-20	1/2		0.68	1	1/4	1/32	3/16	1/8	-	1/16	3/4	17.4	9 180	11 600
1/2	CR 20 BR	CR 20 B	CR 20 BUUR	CR 20 BUU	132	1 1/4	3/4	1/2	1/2 -20	5/8		0.8	1 1/4	5/16	1/32	3/16	1/8	1/4	1/16	55/64	27.7	14 200	16 000
	CR 20 VBR	CR 20 VB	CR 20 VBUUR	CR 20 VBUU	137	1 1/4	3/4	1/2	1/2 -20	5/8		0.8	1 1/4	5/16	1/32	3/16	1/8	1/4	1/16	55/64	27.7	23 600	31 700
	CR 22 VBR	CR 22 VB	CR 22 VBUUR	CR 22 VBUU	160	1 3/8	3/4	1/2	1/2 -20	5/8		0.8	1 1/4	5/16	1/32	3/16	1/8	1/4	1/16	55/64	27.7	23 600	31 700
	CR 22 BR	CR 22 B	CR 22 BUUR	CR 22 BUU	157	1 3/8	3/4	1/2	1/2 -20	5/8		0.8	1 1/4	5/16	1/32	3/16	1/8	1/4	1/16	55/64	27.7	14 200	16 000
5/8	CR 24 BR	CR 24 B	CR 24 BUUR	CR 24 BUU	225	1 1/2	7/8	5/8	5/8 -18	3/4		0.93	1 1/2	3/8	1/32	3/16	5/32	5/16	1/16	1 3/64	55.7	18 600	24 300
	CR 24 VBR	CR 24 VB	CR 24 VBUUR	CR 24 VBUU	230	1 1/2	7/8	5/8	5/8 -18	3/4		0.93	1 1/2	3/8	1/32	3/16	5/32	5/16	1/16	1 3/64	55.7	28 200	40 100
	CR 24 BR	CR 24 B	CR 24 BUUR	CR 24 BUU	225	1 1/2	7/8	5/8	5/8 - 18	3/4		0.93	1 1/2	3/8	1/32	3/16	5/32	5/16	1/16	1 3/64	55.7	18 600	24 300
	CR 24 R	CR 24	CR 24 UUR	CR 24 UU	225	1 1/2	7/8	5/8	5/8 - 18	3/4		0.93	1 1/2	3/8	1/32	3/16	5/32	-	1/16	1 3/64	55.7	18 600	24 300
	CR 26 BR	CR 26 B	CR 26 BUUR	CR 26 BUU	260	1 5/8	7/8	5/8	5/8 - 18	3/4		0.93	1 1/2	3/8	1/32	3/16	5/32	5/16	1/16	1 3/64	55.7	18 600	24 300
3/4	CR 28 BR	CR 28 B	CR 28 BUUR	CR 28 BUU	365	1 3/4	1	3/4	3/4 - 16	7/8		1.06	1 3/4	7/16	1/32	3/16	5/32	5/16	1/16	1 9/32	100	25 100	38 200
	CR 28 BR	CR 28 B	CR 28 BUUR	CR 28 BUU	365	1 3/4	1	3/4	3/4 -16	7/8		1.06	1 3/4	7/16	1/32	3/16	5/32	5/16	1/16	1 9/32	100	25 100	38 200
	CR 28 VBR	CR 28 VB	CR 28 VBUUR	CR 28 VBUU	372	1 3/4	1	3/4	3/4 -16	7/8		1.06	1 3/4	7/16	1/32	3/16	5/32	5/16	1/16	1 9/32	100	35 300	55 600
	CR 30 BR	CR 30 B	CR 30 BUUR	CR 30 BUU	410	1 7/8	1	3/4	3/4 -16	7/8		1.06	1 3/4	7/16	1/32	3/16	5/32	5/16	1/16	1 9/32	100	25 100	38 200
	CR 30 VBR	CR 30 VB	CR 30 VBUUR	CR 30 VBUU	418	1 7/8	1	3/4	3/4 -16	7/8		1.06	1 3/4	7/16	1/32	3/16	5/32	5/16	1/16	1 9/32	100	35 300	55 600

* Not a stocked range although availabe on request.

Every effort has been taken to ensure that the data listed in this catalogue is correct.
Finer Power Transmissions P/L will not accept liability for any damage or loss caused as a result of the data in this catalogue.
Every effort has been taken to ensure that the data listed in this catalogue is correct.
Finer Power Transmissions P/L will not accept liability for any damage or loss caused as a result of the data in this catalogue.

JAPANESE BEARINGS
Finer Power Transmissions P/L | www.finerpt.com
Cam Followers - Metric & Imperial

CR Series

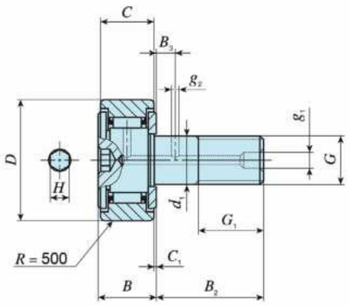

CR···BR

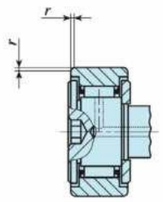

CR···B

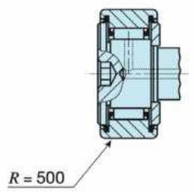

CR···BUUR

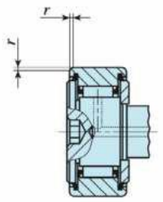

CR···BUU

Stud dia. inch	Identification number				Mass (Ref.) g	Dimensions (inch)						Dimensions (inch)								Mounting dimension f Min. (inch)	Maximum tightening torque N-m	Basic dynamic load rating C N	Basic static load rating C0 N
	Shield type		Sealed type																				
	With crowned outer ring*	With cylindrical outer ring*	With crowned outer ring	With cylindrical outer ring		D	C	d1	G UNF	G1		Bmax	B2	B3	C1	g1	g2	H	r				
7/8	CR 32 BR	CR 32 B	CR 32 BUUR	CR 32 BUU	615	2	1 1/4	7/8	7/8 - 14	1		1.32	2	1/2	1/32	3/16	3/16	7/16	1/16	15/32	162	32 500	63 900
	CR 32 BR	CR 32 B	CR 32 BUUR	CR 32 BUU	615	2	1 1/4	7/8	7/8 -14	1		1.32	2	1/2	1/32	3/16	3/16	7/16	1/16	15/32	162	32 500	63 900
	CR 36 BR	CR 36 B	CR 36 BUUR	CR 36 BUU	750	2 1/4	1 1/4	7/8	7/8 -14	1		1.32	2	1/2	1/32	3/16	3/16	7/16	1/16	15/32	162	32 500	63 900
1 1/4	-	-	-	CR 48 VBUU	900	3	1 1/4	1 3/4	-	-		-	-	-	-	-	-	-	-	-	-	-	-

* Not a stocked range although available on request.

GUIDE
B = Hex
No B = Slotted (Screwdriver)
UU = 2 Rubber Seals
R = Crowned / Spherical
No R = Cylindrical
V = Full Compliment
No V = Caged

CR Series

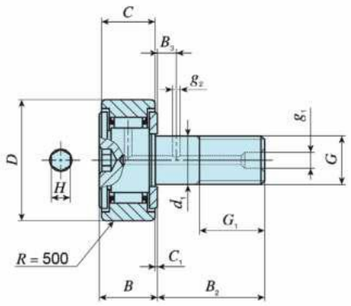

CR···BR

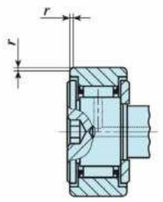

CR···B

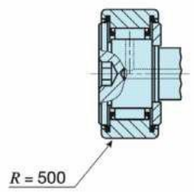

CR···BUUR

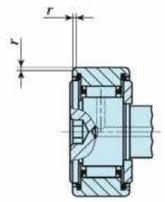

CR···BUU

Every effort has been taken to ensure that the data listed in this catalogue is correct.
Finer Power Transmissions P/L will not accept liability for any damage or loss caused as a result of the data in this catalogue.
Every effort has been taken to ensure that the data listed in this catalogue is correct.
Finer Power Transmissions P/L will not accept liability for any damage or loss caused as a result of the data in this catalogue.

JAPANESE BEARINGS
Finer Power Transmissions P/L | www.finerpt.com
Cam Followers - Metric & Imperial

Stainless Steel CF Series

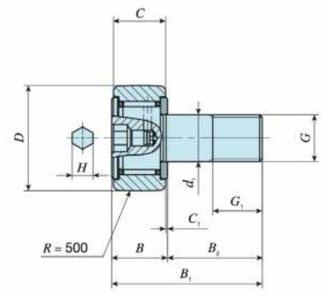

CF···(F)BR

Stud dia. d_1 3 to 10 mm (1)

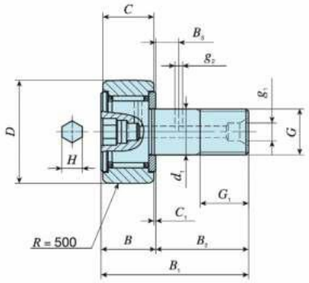

CF···(F)BR

Stud dia. d_1 12 to 30 mm (2)
(12 to 20 mm) (2)

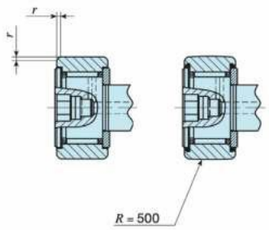

CF···(F)B

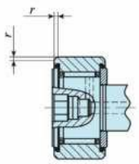

CF···(F)BUUR

CF···(F)BUU

Stud dia. mm	Identification number: Shield type: With crowned outer ring*	Shield type: With cylindrical outer ring*	Sealed type: With crowned outer ring	Sealed type: With cylindrical outer ring	Mass (Ref.) g	Dimensions (mm): D	C	d1	G		Dimensions (mm): G1	B	B1	B2	B3	C1	g1	g2	H	rs min	Mounting dimension f Min. mm	Maximum tightening torque N-m	Basic dynamic load rating C N	Basic static load rating C0 N	Maximum allowable static load N
3	CF 3 FBR	CF 3 FB	CF 3 FBUUR	CF 3 FBUU	4.3	10	7	3	M 3×0.5		5	8	17	9	-	0.5	-	-	2	0.2	6.8	0.34	1 200	813	384
5	CF 5 FBR	CF 5 FB	CF 5 FBUUR	CF 5 FBUU	10.3	13	9	5	M 5×0.8		7.5	10	23	13	-	0.5	-	-	3	0.3	9.3	1.6	1 930	1 730	1 260
6	CF 6 FBR	CF 6 FB	CF 6 FBUUR	CF 6 FBUU	18.5	16	11	6	M 6×1		8	12.2 max	28.2 max	16	-	0.6	-	-	3	0.3	11	2.7	2 930	2 920	1 950
8	CF 8 FBR	CF 8 FB	CF 8 FBUUR	CF 8 FBUU	28.5	19	11	8	M 8×1.25		10	12.2 max	32.2 max	20	-	0.6	-	-	4	0.3	13	6.5	3 400	3 790	3 790
10	CF 10 FBR	CF 10 FB	CF 10 FBUUR	CF 8 FBUU	45	22	12	10	M 10×1.25		12	13.2 max	36.2 max	23	-	0.6	-	-	5	0.3	16	13.8	4 340	5 510	5 510
	CF 10-1 FBR	CF 10 FB	CF 10 FBURR	CF 10 FBUU	60	26	12	10	M10x1.25		12	13.2 max	36.2 max	23	-	0.6	-	-	4	0.3	16	13.8	5 430	6 890	6 890
12	CF 12 FBR	CF 12 FB	CF 12 FBUUR	CF 12 FBUU	95	30	14	12	M 12×1.5		13	15.2 max	40.2 max	25	6	0.6	6	3	6	0.6	21	21.9	6 330	7 830	7 830
	CF 12-1 FBR	CF 12-1 FB	CF 12-1 FBURR	CF 12-1 FBUU	105	32	14	12	M12x1.5		13	15.2 max	42.0 max	25	6	0.6	4	3	6	0.6	21	21.9	6 330	7 830	7 830
16	CF 16 FBR	CF 16 FB	CF 16 FBUUR	CF 16 FBUU	170	35	18	16	M 16×1.5		17	19.6 max	52.1 max	32.5	8	0.8	6	3	6	0.6	26	58.5	9 620	14 700	14 700
18	CF 18 FBR	CF 18 FB	CF 18 FBUUR	CF 18 FBUU	250	40	20	18	M 18×1.5		19	21.6 max	58.1 max	36.5	8	0.8	6	3	8	1	29	86.2	11 800	20 200	20 200
20	CF 20 FBR	CF 20 FB	CF 20 FBUUR	CF 20 FBUU	460	52	24	20	M 20×1.5		21	25.6 max	66.1 max	40.5	9	0.8	8	4	8	1	34	119	16 500	27 700	27 700

* Not a stocked range although available on request.

GUIDE
B = Hex
No B = Slotted (Screwdriver)
UU = 2 Rubber Seals
R = Crowned / Spherical
No R = Cylindrical
V = Full Compliment
No V = Caged
F = Stainless Steel

Stainless Steel CF Series

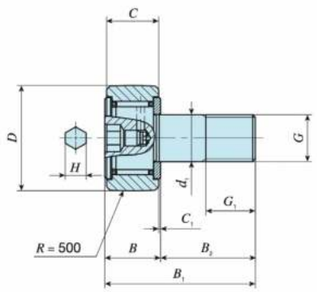

CF···(F)BR

Stud dia. d_1 3 to 10 mm (1)

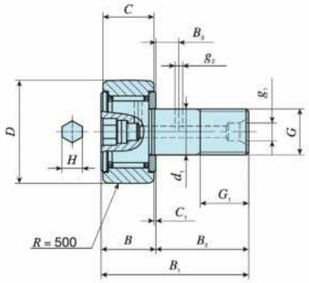

CF···(F)BR

Stud dia. d_1 12 to 30 mm (2)
(12 to 20 mm) (2)

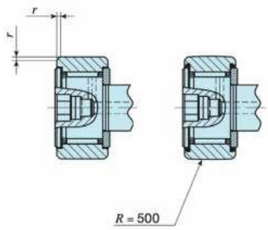

CF···(F)B

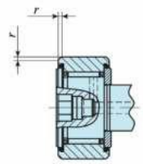

CF···(F)BUUR

CF···(F)BUU

Every effort has been taken to ensure that the data listed in this catalogue is correct.
Finer Power Transmissions P/L will not accept liability for any damage or loss caused as a result of the data in this catalogue.
Every effort has been taken to ensure that the data listed in this catalogue is correct.
Finer Power Transmissions P/L will not accept liability for any damage or loss caused as a result of the data in this catalogue.

JAPANESE BEARINGS
Finer Power Transmissions P/L | www.finerpt.com
Cam Followers - Metric & Imperial

NUCF Series

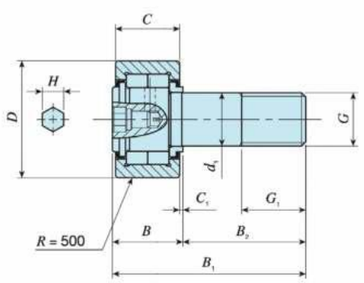

Stud dia. d_1 10 mm (1)

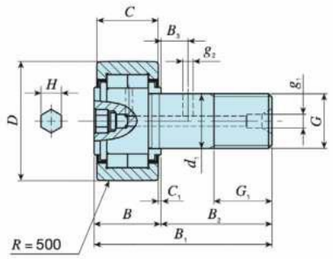

Stud dia. d_1 12 to 30 mm (2)

Stud dia. mm	Identification number	Mass (Ref.) g	Dimensions mm D	C	d1	G	G1	Bmax	B1max	B2		Dimensions mm B3	C1	g1	g2	H	Mounting dimension f Min. mm	Maximum tightening torque N-m	Basic dynamic load rating C N	Basic static load rating C0 N	Maximum allowable static load N
10	NUCF 10-1 BR	58	26	12	10	M 10×1.25	12	13.2	36.2	23		-	0.6	-	-	4	12	13.8	10 400	11 500	9 210
	NUCF 10 BR	44	22	12	10	M 10×1.25	12	13.2	36.2	23		-	0.6	-	-	4	12	13.8	10 400	11 500	5 300
12	NUCF 12-1 BR	97	32	14	12	M 12×1.5	13	15.2	40.2	25		6	0.6	4	3	6	17	21.9	14 000	13 400	9 040
	NUCF 12 BR	86	30	14	12	M 12×1.5	13	15.2	40.2	25		6	0.6	4	3	6	17	21.9	14 000	13 400	5 650
16	NUCF 16 BR	167	35	18	16	M 16×1.5	17	19.6	52.1	32.5		8	0.8	4	3	6	20	58.5	23 400	27 300	11 800
18	NUCF 18 BR	244	40	20	18	M 18×1.5	19	21.6	58.1	36.5		8	0.8	6	3	8	22	86.2	25 200	30 900	20 300
20	NUCF 20-1 BR	384	47	24	20	M 20×1.5	21	25.6	66.1	40.5		9	0.8	6	4	8	27	119	38 900	49 000	27 200
	NUCF 20 BR	457	52	24	20	M 20×1.5	21	25.6	66.1	40.5		9	0.8	6	4	8	31	119	43 100	58 100	30 000
24	NUCF 24-1 BR	1 020	72	29	24	M 24×1.5	25	30.6	80.1	49.5		11	0.8	6	4	12	44	215	63 900	88 800	57 000
	NUCF 24 BR	789	62	29	24	M 24×1.5	25	30.6	80.1	49.5		11	0.8	6	4	12	38	215	58 200	75 300	35 200
30	NUCF 30-2 BR	1 970	90	35	30	M 30×1.5	32	37	100	63		15	1	6	4	17	45	438	90 300	121 000	98 300
	NUCF 30 BR	1 600	80	35	30	M 30×1.5	32	37	100	63		15	1	6	4	17	45	438	90 300	121 000	98 300

NUCF Series

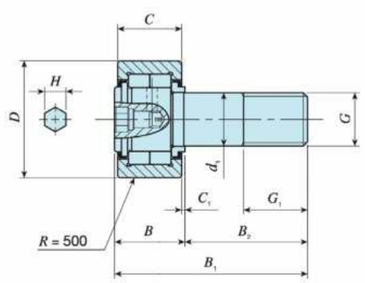

Stud dia. d_1 10 mm (1)

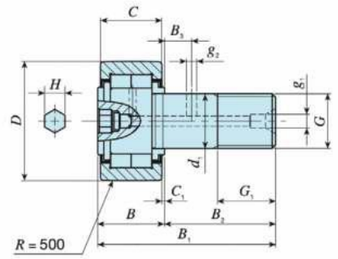

Stud dia. d_1 12 to 30 mm (2)

Every effort has been taken to ensure that the data listed in this catalogue is correct.
Finer Power Transmissions P/L will not accept liability for any damage or loss caused as a result of the data in this catalogue.
Every effort has been taken to ensure that the data listed in this catalogue is correct.
Finer Power Transmissions P/L will not accept liability for any damage or loss caused as a result of the data in this catalogue.

JAPANESE BEARINGS
Finer Power Transmissions P/L | www.finerpt.com
Cam Followers - Metric & Imperial

CRH Series

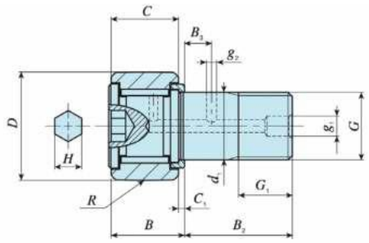

CRH···VBR

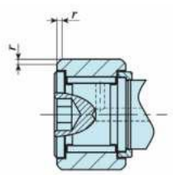

CRH···VB

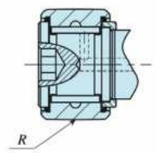

CRH···VBUUR

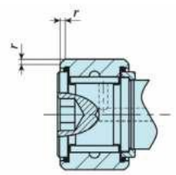

CRH···VBUU

CRH···VBR
CRH···VB
CRH···VBUUR
CRH···VBUU

Stud dia. (inch)	Identification number		Mass (Ref.) g	Dimensions (inch)						Dimensions (inch)								Mounting dimension f Min. (inch)	Maximum tightening torque N-m	Basic dynamic load rating C N	Basic static load rating CO N
	Shield type*	Sealed type		D	C	d1	G UNF	G1		Bmax	B2	B3	C1	g1	g2	H	R				
5/16	CRH 10-1 VBR	CRH 10-1 VBUUR	23	5/8	7/16	5/16	5/16 - 24	5/16		0.5	3/4	-	1/32	-	-	1/8	8	7/16	6.8	6 340	8 530
	CRH 11 VBR	CRH 11 VBUUR	27	11/16	7/16	5/16	5/16 - 24	5/16		0.5	3/4	-	1/32	-	-	1/8	8	7/16	6.8	6 340	8 530
	CRH 10-1 VB	CRH 10-1 VBUU	23	5/8	7/16	5/16	5/16 -24	5/16		0.5	3/4	-	1/32	-	-	1/8	1/64	7/16	6.8	6 340	8 530
	CRH 11 VB	CRH 11 VBUU	27	11/16	7/16	5/16	5/16 -24	5/16		0.5	3/4	-	1/32	-	-	1/8	1/64	7/16	6.8	6 340	8 530
7/16	CRH 12 VBR	CRH 12 VBUUR	39	3/4	1/2	7/16	7/16 -20	3/8		0.57	7/8	1/4	1/32	3/16	3/32	3/16	10	17/32	17.6	8 710	12 300
	CRH 14 VBR	CRH 14 VBUUR	49	7/8	1/2	7/16	7/16 -20	3/8		0.57	7/8	1/4	1/32	3/16	3/32	3/16	10	17/32	17.6	8 710	12 300
	CRH 12 VB	CRH 12 VBUU	39	3/4	1/2	7/16	7/16 -20	3/8		0.57	7/8	1/4	1/32	3/16	3/32	3/16	1/32	17/32	17.6	8 710	12 300
	CRH 14 VB	CRH 14 VBUU	49	7/8	1/2	7/16	7/16 -20	3/8		0.57	7/8	1/4	1/32	3/16	3/32	3/16	1/32	17/32	17.6	8 710	12 300
5/8	CRH 16 VBR	CRH 16 VBUUR	93	1	5/8	5/8	5/8 -18	1/2		0.7	1	1/4	1/16	3/16	3/32	1/4	12	23/32	57.8	13 100	22 700
	CRH 18 VBR	CRH 18 VBUUR	109	1 1/8	5/8	5/8	5/8 -18	1/2		0.7	1	1/4	1/16	3/16	3/32	1/4	12	23/32	57.8	13 100	22 700
	CRH 16 VB	CRH 16 VBUU	93	1	5/8	5/8	5/8 -18	1/2		0.7	1	1/4	1/16	3/16	3/32	1/4	3/64	23/32	57.8	13 100	22 700
	CRH 18 VB	CRH 18 VBUU	109	1 1/8	5/8	5/8	5/8 -18	1/2		0.7	1	1/4	1/16	3/16	3/32	1/4	1/16	23/32	57.8	13 100	22 700
3/4	CRH 20 VBR	CRH 20 VBUUR	176	1 1/4	3/4	3/4	3/4 -16	5/8		0.83	1 1/4	5/16	1/16	3/16	3/32	1/4	14	61/64	103	23 600	31 700
	CRH 22 VBR	CRH 22 VBUUR	200	1 3/8	3/4	3/4	3/4 -16	5/8		0.83	1 1/4	5/16	1/16	3/16	3/32	1/4	14	61/64	103	23 600	31 700
	CRH 20 VB	CRH 20 VBUU	176	1 1/4	3/4	3/4	3/4 -16	5/8		0.83	1 1/4	5/16	1/16	3/16	3/32	1/4	1/16	61/64	103	23 600	31 700
	CRH 22 VB	CRH 22 VBUU	200	1 3/8	3/4	3/4	3/4 -16	5/8		0.83	1 1/4	5/16	1/16	3/16	3/32	1/4	1/16	61/64	103	23 600	31 700
7/8	CRH 24 VBR	CRH 24 VBUUR	296	1 1/2	7/8	7/8	7/8 -14	3/4		0.96	1 1/2	3/8	1/16	3/16	3/32	5/16	20	1 1/16	162	28 200	40 100
	CRH 26 VBR	CRH 26 VBUUR	329	1 5/8	7/8	7/8	7/8 -14	3/4		0.96	1 1/2	3/8	1/16	3/16	3/32	5/16	20	1 1/16	162	28 200	40 100
	CRH 24 VB	CRH 24 VBUU	296	1 1/2	7/8	7/8	7/8 -14	3/4		0.96	1 1/2	3/8	1/16	3/16	3/32	5/16	1/16	1 1/16	162	28 200	40 100
1	CRH 28 VBR	CRH 28 VBUUR	463	1 3/4	1	1	1 -14UNS	7/8		1.08	1 3/4	7/16	1/16	3/16	3/32	5/16	20	1 19/64	258	35 300	55 600
	CRH 30 VBR	CRH 30 VBUUR	508	1 7/8	1	1	1 -14UNS	7/8		1.08	1 3/4	7/16	1/16	3/16	3/32	5/16	20	1 19/64	258	35 300	55 600
	CRH 28 VB	CRH 28 VBUU	463	1 3/4	1	1	1 -14UNS	7/8		1.08	1 3/4	7/16	1/16	3/16	3/32	5/16	1/16	1 19/64	258	35 300	55 600
	CRH 30 VB	CRH 30 VBUU	508	1 7/8	1	1	1 -14UNS	7/8		1.08	1 3/4	7/16	1/16	3/16	3/32	5/16	1/16	1 19/64	258	35 300	55 600
1 1/8	CRH 32 VBR	CRH 32 VBUUR	722	2	1 1/4	1 1/8	1 1/8 -12	1		1.35	2	1/2	1/16	3/16	1/8	7/16	24	1 15/32	356	45 700	80 600
	CRH 32 VB	CRH 32 VBUU	722	2	1 1/4	1 1/8	1 1/8 -12	1		1.35	2	1/2	1/16	3/16	1/8	7/16	1/16	1 15/32	356	45 700	80 600
	CRH 36 VB	CRH 36 VBUU	858	2 1/4	1 1/4	1 1/8	1 1/8 -12	1		1.35	2	1/2	1/16	3/16	1/8	7/16	1/16	1 15/32	356	45 700	80 600
1 1/4	CRH 40 VBR	CRH 40 VBUUR	1 260	2 1/2	1 1/2	1 1/4	1 1/4 -12	1 1/8		1.57	2 1/4	9/16	1/16	3/16	1/8	1/2	30	1 39/64	500	61 400	116 000
	CRH 44 VBR	CRH 44 VBUUR	1 460	2 3/4	1 1/2	1 1/4	1 1/4 -12	1 1/8		1.57	2 1/4	9/16	1/16	3/16	1/8	1/2	30	1 39/64	500	61 400	116 000
	CRH 40 VB	CRH 40 VBUU	1 260	2 1/2	1 1/2	1 1/4	1 1/4 -12	1 1/8		1.57	2 1/4	9/16	1/16	3/16	1/8	1/2	3/32	1 39/64	500	61 400	116 000
	CRH 44 VB	CRH 44 VBUU	1 460	2 3/4	1 1/2	1 1/4	1 1/4 -12	1 1/8		1.57	2 1/4	9/16	1/16	3/16	1/8	1/2	3/32	1 39/64	500	61 400	116 000

* Not a stocked range although available on request.

Every effort has been taken to ensure that the data listed in this catalogue is correct.
Finer Power Transmissions P/L will not accept liability for any damage or loss caused as a result of the data in this catalogue.
Every effort has been taken to ensure that the data listed in this catalogue is correct.
Finer Power Transmissions P/L will not accept liability for any damage or loss caused as a result of the data in this catalogue.

JAPANESE BEARINGS
Finer Power Transmissions P/L | www.finerpt.com
Cam Followers - Metric & Imperial

CRH Series

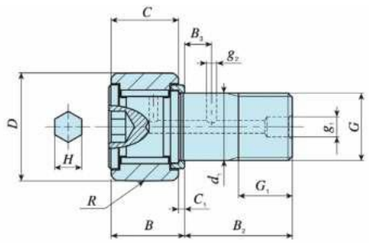

CRH···VBR

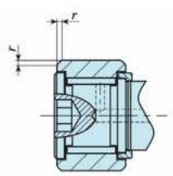

CRH···VB

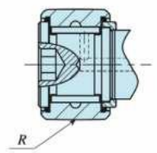

CRH···VBUUR

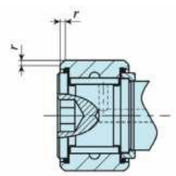

CRH···VBUU

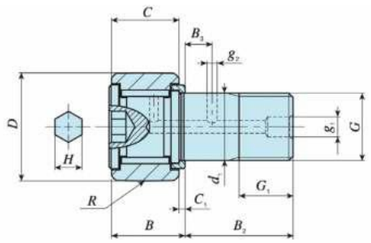

CRH···VBR

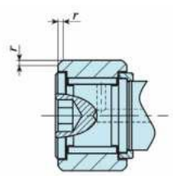

CRH···VB

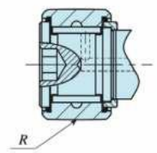

CRH···VBUUR

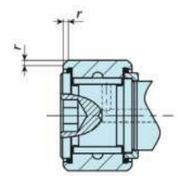

CRH···VBUU

Stud dia. (inch)	Identification number		Mass (Ref.) g	Dimensions (inch)						Dimensions (inch)								Mounting dimension f Min. (inch)	Maximum tightening torque N-m	Basic dynamic load rating C N	Basic static load rating C0 N
	Shield type*	Sealed type		D	C	d1	G UNF	G1		Bmax	B2	B3	C1	g1	g2	H	R				
1 1/2	CRH 52 VBR	CRH 52 VBUUR	2 380	3 1/4	1 3/4	1 1/2	1 1/2 -12	1 1/4		1.83	2 1/2	5/8	1/16	1/4	1/8	3/4	30	2 3/64	892	77 600	172 000
	CRH 48 VB	CRH 48 VBUU	2 100	3	1 3/4	1 1/2	1 1/2 -12	1 1/4		1.83	2 1/2	5/8	1/16	1/4	1/8	3/4	3/32	2 3/64	892	77 600	172 000
	CRH 52 VB	CRH 52 VBUU	2 380	3 1/4	1 3/4	1 1/2	1 1/2 -12	1 1/4		1.83	2 1/2	5/8	1/16	1/4	1/8	3/4	3/32	2 3/64	892	77 600	172 000
1 3/4	CRH 56 VBR	CRH 56 VBUUR	3 240	3 1/2	2	1 3/4	1 3/4 - 12UN	1 3/8		2.08	2 3/4	11/16	1/16	1/4	1/8	3/4	30	2 23/64	1 450	111 000	239 000
	CRH 56 VB	CRH 56 VBUU	3 240	3 1/2	2	1 3/4	1 3/4 - 12UN	1 3/8		2.08	2 3/4	11/16	1/16	1/4	1/8	3/4	3/32	2 23/64	1 450	111 000	239 000

* Not a stocked range although available on request.

GUIDE
B = Hex
No B = Slotted (Screwdriver)
UU = 2 Rubber Seals
R = Crowned / Spherical
No R = Cylindrical
V = Full Compliment
No V = Caged
F = Stainless Steel

Every effort has been taken to ensure that the data listed in this catalogue is correct.
Finer Power Transmissions P/L will not accept liability for any damage or loss caused as a result of the data in this catalogue.
Every effort has been taken to ensure that the data listed in this catalogue is correct.
Finer Power Transmissions P/L will not accept liability for any damage or loss caused as a result of the data in this catalogue.

JAPANESE BEARINGS
Finer Power Transmissions P/L | www.finerpt.com
Cam Followers - Metric & Imperial

CFE Series

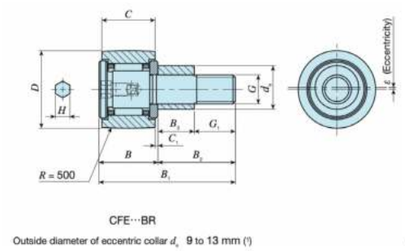

CFE···BR
Outside diameter of eccentric collar d_s 9 to 13 mm (1)

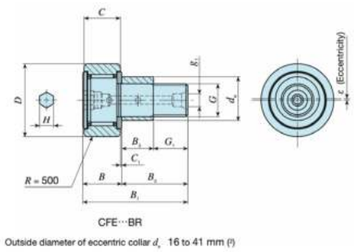

CFE···BR
Outside diameter of eccentric collar d_s 16 to 41 mm (2)

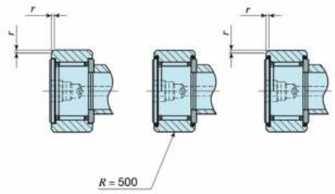

CFE···B CFE···BUUR CFE···BUU

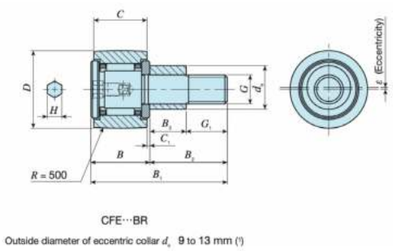

CFE···BR
Outside diameter of eccentric collar d_s 9 to 13 mm (1)

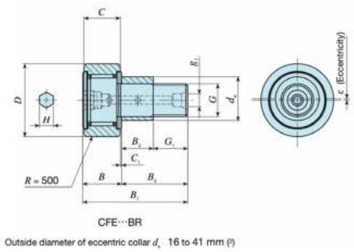

CFE···BR
Outside diameter of eccentric collar d_s 16 to 41 mm (2)

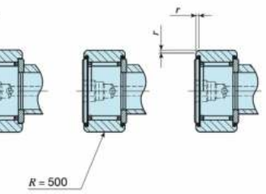

CFE···B CFE···BUUR CFE···BUU

Outside diameter of eccentric collar mm	Identification number				Mass (Ref.) g	Boundary dimensions mm															Mounting dimension f Min. mm	Maximum tightening torque N-m	Basic dynamic load rating C N	Basic static load rating C0 N	Maximum allowable static load N
	Shield type		Sealed type																						
	With crowned outer ring*	With cylindrical outer ring*	With crowned outer ring	With cylindrical outer ring		D	C	de	G		B3	Bmax	B1max	B2	C1	g1	G1	H	rs min	Eccen-tricity					
9	CFE 6 BR	CFE 6 B	CFE 6 BUUR	CFE 6 BUU	20.5	16	11	9	M6×1		7.5	12.2	28.2	16	0.6	-	8.5	3	0.3	0.4	11	2.7	3 660	3 650	1 950
11	CFE 8 BR	CFE 8 B	CFE 8 BUUR	CFE 8 BUU	32	19	11	11	M8×1.25		9.5	12.2	32.2	20	0.6	-	10.5	4	0.3	0.4	13	6.5	4 250	4 740	4 620
13	CFE 10-1 BR	CFE 10-1 B	CFE 10-1 BUUR	CFE 10-1 BUU	65	26	12	13	M10×1.25		10.5	13.2	36.2	23	0.6	-	12.5	4	0.3	0.4	16	13.8	5 430	6 890	6 890
	CFE 10 BR	CFE 10 B	CFE 10 BUUR	CFE 10 BUU	49.5	22	12	13	M10×1.25		10.5	13.2	36.2	23	0.6	-	12.5	4	0.3	0.4	16	13.8	5 430	6 890	6 890
16	CFE 12-1 BR	CFE 12-1 B	CFE 12-1 BUUR	CFE 12-1 BUU	115	32	14	16	M12×1.5		11.5	15.2	40.2	25	0.6	6	13.5	6	0.6	0.8	21	21.9	7 910	9 790	9 790
	CFE 12 BR	CFE 12 B	CFE 12 BUUR	CFE 12 BUU	105	30	14	16	M12×1.5		11.5	15.2	40.2	25	0.6	6	13.5	6	0.6	0.8	21	21.9	7 910	9 790	9 790
22	CFE 16 BR	CFE 16 B	CFE 16 BUUR	CFE 16 BUU	190	35	18	22	M16×1.5		15.5	19.6	52.1	32.5	0.8	6	17	6	0.6	0.8	26	58.5	12 000	18 300	18 300
24	CFE 18 BR	CFE 18 B	CFE 18 BUUR	CFE 18 BUU	280	40	20	24	M18×1.5		17.5	21.6	58.1	36.5	0.8	6	19	8	1	0.8	29	86.2	14 800	25 200	25 200
	CFE 18 VBR	CFE 18 VB	CFE 18 VBUUR	CFE 18 VBUU	285	40	20	24	M18×1.5		17.5	21.6	58.1	36.5	0.8	6	19	8	1	0.8	29	86.2	25 300	51 300	31 100
27	CFE 20-1 BR	CFE 20-1 B	CFE 20-1 BUUR	CFE 20-1 BUU	425	47	24	27	M20×1.5		19.5	25.6	66.1	40.5	0.8	8	21	8	1	0.8	34	119	20 700	34 600	34 600
	CFE 20-1 VBR	CFE 20-1 VB	CFE 20-1 VBUUR	CFE 20-1 VBUU	430	47	24	27	M20×1.5		19.5	25.6	66.1	40.5	0.8	8	21	8	1	0.8	34	119	33 200	64 500	37 500
	CFE 20 BR	CFE 20 B	CFE 20 BUUR	CFE 20 BUU	500	52	24	27	M20×1.5		19.5	25.6	66.1	40.5	0.8	8	21	8	1	0.8	34	119	20 700	34 600	34 600
	CFE 20 VBR	CFE 20 VB	CFE 20 VBUUR	CFE 20 VBUU	505	52	24	27	M20×1.5		19.5	25.6	66.1	40.5	0.8	8	21	8	1	0.8	34	119	33 200	64 500	37 500
33	CFE 24 BR	CFE 24 B	CFE 24 BUUR	CFE 24 BUU	895	62	29	33	M24×1.5		25.5	30.6	80.1	49.5	0.8	8	24	12	1	0.8	40	215	30 500	52 600	52 000
	CFE 24 VBR	CFE 24 VB	CFE 24 VBUUR	CFE 24 VBUU	900	62	29	33	M24×1.5		25.5	30.6	80.1	49.5	0.8	8	24	12	1	0.8	40	215	46 600	92 000	52 000
	CFE 24-1 BR	CFE 24-1 B	CFE 24-1 BUUR	CFE 24-1 BUU	1 220	72	29	33	M24×1.5		25.5	30.6	80.1	49.5	0.8	8	24	12	1	0.8	40	215	30 500	52 600	52 000
41	CFE 30-1 BR	CFE 30-1 B	CFE 30-1 BUUR	CFE 30-1 BUU	2 190	85	35	41	M30×1.5		32.5	37	100	63	1	8	30.5	17	1	1.5	49	438	45 400	85 100	85 100
	CFE 30-2 BR	CFE 30-2 B	CFE 30-2 BUUR	CFE 30-2 BUU	2 380	90	35	41	M30×1.5		32.5	37	100	63	1	8	30.5	17	1	1.5	49	438	45 400	85 100	85 100
	CFE 30-2 VBR	CFE 30-2 VB	CFE 30-2 VBUUR	CFE 30-2 VBUU	2 380	90	35	41	M30×1.5		32.5	37	100	63	1	8	30.5	17	1	1.5	49	438	67 700	144 000	85 900
	CFE 30 BR	CFE 30 B	CFE 30 BUUR	CFE 30 BUU	2 030	80	35	41	M30×1.5		32.5	37	100	63	1	8	30.5	17	1	1.5	49	438	45 400	85 100	85 100

* Not a stocked range although available on request.

GUIDE
B = Hex
No B = Slotted (Screwdriver)
UU = 2 Rubber Seals
R = Crowned / Spherical
No R = Cylindrical
V = Full Compliment
No V = Caged
F = Stainless Steel

Every effort has been taken to ensure that the data listed in this catalogue is correct.
Finer Power Transmissions P/L will not accept liability for any damage or loss caused as a result of the data in this catalogue.
Every effort has been taken to ensure that the data listed in this catalogue is correct.
Finer Power Transmissions P/L will not accept liability for any damage or loss caused as a result of the data in this catalogue.

JAPANESE BEARINGS
Finer Power Transmissions P/L | www.finerpt.com

Roller Followers - Imperial

CRY-VUUR Non-Separable Full Complement Series

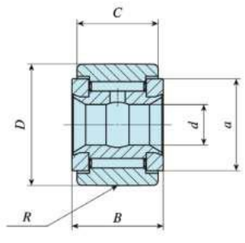

CRY···VR

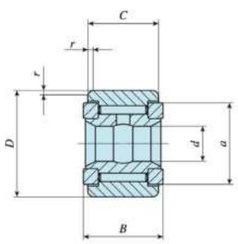

CRY···V

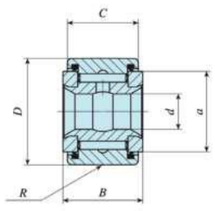

CRY···VUUR

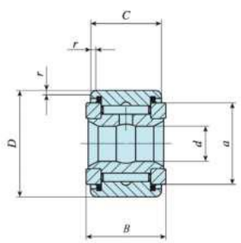

CRY···VUU

CRY-VUUR Non-Separable Full Complement Series

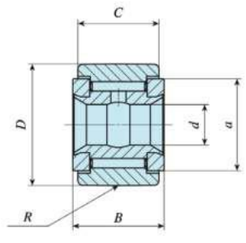

CRY···VR

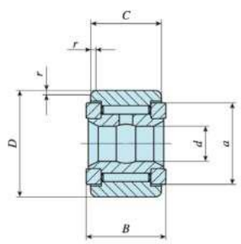

CRY···V

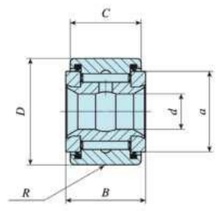

CRY···VUUR

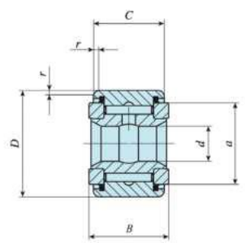

CRY···VUU

Shaft dia. (inch)	Identification number		Mass (Ref.)	Dimensions mm (inch)						Dimensions mm (inch)		Shaft dia.						Basic dynamic load rating C N	Basic static load rating C0
												Push fit		Drive fit		Press fit			
	Shield type Crowner outer ring*	Sealed type Crowned outer ring	g	d	D	B	C	a		R	r	Min.	Max.	Min.	Max.	Min.	Max.		
1/4	CRY 12 V	CRY 12 VUU	27	6.350 (1/ 4)	19.050 (3/ 4)	14.288 (9/16)	12.700 (1/ 2)	14.4 (9/16)		-	0.794 (1/32)	6.332	6.342	6.348	6.358	6.353	6.363	8 710	12 300
	CRY 12 VR	CRY 12 VUUR	27	6.350 (1/ 4)	19.050 (3/ 4)	14.288 (9/16)	12.700 (1/ 2)	14.4 (9/16)		250 (10)	-	6.332	6.342	6.348	6.358	6.353	6.363	8 710	12 300
	CRY 14 V	CRY 14 VUU	36	6.350 (1/ 4)	22.225 (7/ 8)	14.288 (9/16)	12.700 (1/ 2)	14.4 (9/16)		-	0.794 (1/32)	6.332	6.342	6.348	6.358	6.353	6.363	8 710	12 300
	CRY 14 VR	CRY 14 VUUR	36	6.350 (1/ 4)	22.225 (7/ 8)	14.288 (9/16)	12.700 (1/ 2)	14.4 (9/16)		250 (10)	-	6.332	6.342	6.348	6.358	6.353	6.363	8 710	12 300
5/16	CRY 16 V	CRY 16 VUU	68	7.938 (5/16)	25.400 (1)	17.463 (11/16)	15.875 (5/ 8)	19.6 (49/64)		-	1.191 (3/64)	7.92	7.93	7.935	7.945	7.94	7.95	13 100	22 700
	CRY 16 VR	CRY 16 VUUR	68	7.938 (5/16)	25.400 (1)	17.463 (11/16)	15.875 (5/ 8)	19.6 (49/64)		300 (12)	-	7.92	7.93	7.935	7.945	7.94	7.95	13 100	22 700
	CRY 18 V	CRY 18 VUU	77	7.938 (5/16)	28.575 (1 1/ 8)	17.463 (11/16)	15.875 (5/ 8)	19.6 (49/64)		-	1.588 (1/16)	7.92	7.93	7.935	7.945	7.94	7.95	13 100	22 700
3/8	CRY 20 V	CRY 20 VUU	109	9.525 (3/ 8)	31.750 (1 1/ 4)	20.638 (13/16)	19.050 (3/ 4)	25.0 (63/64)		-	1.588 (1/16)	9.507	9.517	9.523	9.533	9.528	9.538	23 600	31 700
	CRY 22 V	CRY 22 VUU	136	9.525 (3/ 8)	34.925 (1 3/ 8)	20.638 (13/16)	19.050 (3/ 4)	25.0 (63/64)		-	1.588 (1/16)	9.507	9.517	9.523	9.533	9.528	9.538	23 600	31 700
7/16	CRY 24 V	CRY 24 VUU	186	11.112 (7/16)	38.100 (1 1/ 2)	23.813 (15/16)	22.225 (7/ 8)	28.8 (1 9/64)		-	1.588 (1/16)	11.095	11.105	11.11	11.12	11.115	11.125	28 200	40 100
	CRY 26 V	CRY 26 VUU	227	11.112 (7/16)	41.275 (1 5/ 8)	23.813 (15/16)	22.225 (7/ 8)	28.8 (1 9/64)		-	1.588 (1/16)	11.095	11.105	11.11	11.12	11.115	11.125	28 200	40 100
1/2	CRY 28 V	CRY 28 VUU	290	12.700 (1/ 2)	44.450 (1 3/ 4)	26.988 (1 1/16)	25.400 (1)	32.7 (1 9/32)		-	1.588 (1/16)	12.682	12.692	12.698	12.708	12.708	12.718	35 300	55 600
	CRY 28 VR	CRY 28 VUUR	290	12.700 (1/ 2)	44.450 (1 3/ 4)	26.988 (1 1/16)	25.400 (1)	32.7 (1 9/32)		500 (20)	-	12.682	12.692	12.698	12.708	12.708	12.718	35 300	55 600
	CRY 30 V	CRY 30 VUU	363	12.700 (1/ 2)	47.625 (1 7/ 8)	26.988 (1 1/16)	25.400 (1)	32.7 (1 9/32)		-	1.588 (1/16)	12.682	12.692	12.698	12.708	12.708	12.718	35 300	55 600
5/8	CRY 32 V	CRY 32 VUU	476	15.875 (5/ 8)	50.800 (2)	33.338 (1 5/16)	31.750 (1 1/ 4)	36.0 (1 27/64)		-	1.588 (1/16)	15.857	15.867	15.873	15.883	15.883	15.893	45 700	80 600
	CRY 32 VR	CRY 32 VUUR	476	15.875 (5/ 8)	50.800 (2)	33.338 (1 5/16)	31.750 1 (1/ 4)	36.0 (1 27/64)		600 (24)	-	15.857	15.867	15.873	15.883	15.883	15.893	45 700	80 600
	CRY 36 V	CRY 36 VUU	599	15.875 (5/ 8)	57.150 (2 1/ 4)	33.338 (1 5/16)	31.750 (1 1/ 4)	36.0 (1 27/64)		-	1.588 (1/16)	15.857	15.867	15.873	15.883	15.883	15.893	45 700	80 600
3/4	CRY 40 V	CRY 40 VUU	816	19.050 (3/ 4)	63.500 (2 1/ 2)	39.688 (1 9/16)	38.100 (1 1/ 2)	43.3 (1 45/64)		-	2.381 (3/32)	19.032	19.042	19.048	19.058	19.058	19.068	61 400	116 000
	CRY 44 V	CRY 44 VUU	1 020	19.050 (3/ 4)	69.850 (2 3/ 4)	39.688 (1 9/16)	38.100 (1 1/ 2)	43.3 (1 45/64)		-	2.381 (3/32)	19.032	19.042	19.048	19.058	19.058	19.068	61 400	116 000
1	CRY 48 V	CRY 48 VUU	1 410	25.400 (1)	76.200 (3)	46.038 (1 13/16)	44.450 (1 3/ 4)	54.0 (2 1/8)		-	2.381 (3/32)	25.377	25.39	25.397	25.41	25.408	25.42	77 600	172 000
	CRY 52 V	CRY 52 VUU	1 640	25.400 (1)	82.550 (3 1/ 4)	46.038 (1 13/16)	44.450 (1 3/ 4)	54.0 (2 1/8)		-	2.381 (3/32)	25.377	25.39	25.397	25.41	25.408	25.42	77 600	172 000
1 1/8	CRY 56 V	CRY 56 VUU	2 250	28.575 (1 1/ 8)	88.900 (3 1/ 2)	52.388 (2 1/16)	50.800 (2)	61.9 (2 7/16)		-	2.381 (3/32)	28.522	28.565	28.572	28.585	28.583	28.595	111 000	239 000
1 1/4	CRY 64 V	CRY 64 VUU	3 200	31.750 (1 1/ 4)	101.600 (4)	58.738 (2 5/16)	57.150 (2 1/ 4)	71.0 (2 51/64)		-	2.381 (3/32)	31.727	31.74	31.747	31.76	31.758	31.77	142 000	317 000
	CRY 64 VR	CRY 64 VUUR	3 200	31.750 (1 1/ 4)	101.600 (4)	58.738 (2 5/16)	57.150 (2 1/ 4)	71.0 (2 51/64)		760 (30)	-	31.727	31.74	31.747	31.76	31.758	31.77	142 000	317 000

* Not a stocked range although available on request.

Every effort has been taken to ensure that the data listed in this catalogue is correct.
Finer Power Transmissions P/L will not accept liability for any damage or loss caused as a result of the data in this catalogue.

Every effort has been taken to ensure that the data listed in this catalogue is correct.
Finer Power Transmissions P/L will not accept liability for any damage or loss caused as a result of the data in this catalogue.

JAPANESE BEARINGS
Finer Power Transmissions P/L | www.finerpt.com

Roller Followers - Metric

NART-UUR/VUUR Non-Separable Cage Series

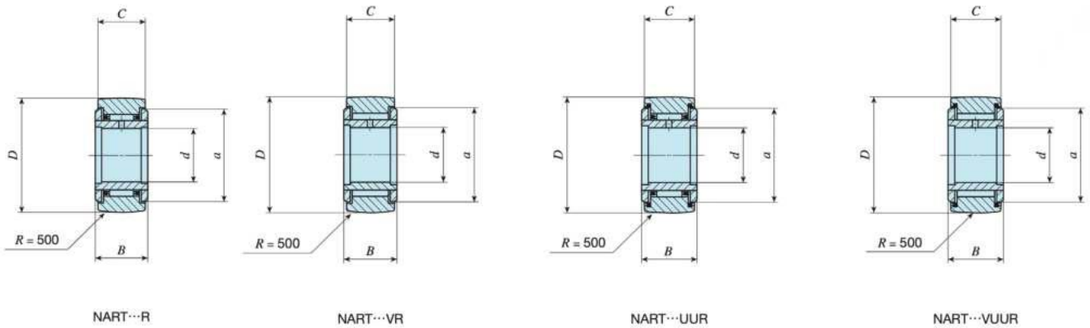

NART-UUR/VUUR Non-Separable Cage Series

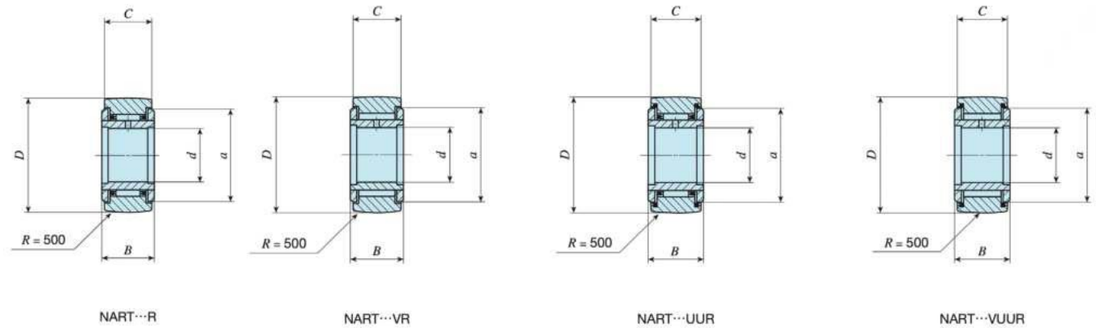

Shaft dia. mm	Identification number				Mass (Ref.) g		Boundary dimensions mm					Basic dynamic load rating C	Basic static load rating C0 N	Maximum allowable static load
	Shield type Crowned outer ring		Sealed type Crowned outer ring											
	With cage*	Full complement*	With cage	Full complement			d	D	B	C	a			
5	NART 5 R	-	NART 5 UUR	-	14.5		5	16	12	11	12	3 650	3 680	3 680
	-	NART 5 VR	-	NART 5 VUUR	15.1		5	16	12	11	12	6 810	8 370	7 310
6	NART 6 R	-	NART 6 UUR	-	20.5		6	19	12	11	14	4 250	4 740	4 740
	-	NART 6 VR	-	NART 6 VUUR	21.5		6	19	12	11	14	7 690	10 300	10 300
8	NART 8 R	-	NART 8 UUR	-	41.5		8	24	15	14	17.5	5 640	5 900	5 900
	-	NART 8 VR	-	NART 8 VUUR	42.5		8	24	15	14	17.5	11 800	15 600	15 600
10	NART 10 R	-	NART 10 UUR	-	64.5		10	30	15	14	23.5	8 030	7 540	7 540
	-	NART 10 VR	-	NART 10 VUUR	66.5		10	30	15	14	23.5	15 600	18 100	17 500
12	NART 12 R	-	NART 12 UUR	-	71		12	32	15	14	25.5	8 580	8 470	8 470
	-	NART 12 VR	-	NART 12 VUUR	73		12	32	15	14	25.5	16 800	20 500	18 600
15	NART 15 R	-	NART 15 UUR	-	102		15	35	19	18	29	13 700	16 400	16 400
	-	NART 15 VR	-	NART 15 VUUR	106		15	35	19	18	29	25 200	36 400	24 000
17	NART 17 R	-	NART 17 UUR	-	149		17	40	21	20	32.5	17 600	21 000	21 000
	-	NART 17 VR	-	NART 17 VUUR	155		17	40	21	20	32.5	32 000	46 300	33 100
20	NART 20 R	-	NART 20 UUR	-	250		20	47	25	24	38	23 000	30 700	30 700
	-	NART 20 VR	-	NART 20 VUUR	255		20	47	25	24	38	41 600	67 300	67 300
25	NART 25 R	-	NART 25 UUR	-	285		25	52	25	24	43	24 700	35 400	35 400
	-	NART 25 VR	-	NART 25 VUUR	295		25	52	25	24	43	45 500	79 100	79 100
30	NART 30 R	-	NART 30 UUR	-	470		30	62	29	28	50.5	33 600	51 400	51 400
	-	NART 30 VR	-	NART 30 VUUR	485		30	62	29	28	50.5	59 900	110 000	92 500
35	NART 35 R	-	NART 35 UUR	-	640		35	72	29	28	53.5	35 700	57 400	57 400
	-	NART 35 VR	-	NART 35 VUUR	655		35	72	29	28	53.5	63 100	121 000	121 000
40	NART 40 R	-	NART 40 UUR	-	845		40	80	32	30	61.5	44 900	81 500	81 500
	-	NART 40 VR	-	NART 40 VUUR	865		40	80	32	30	61.5	76 300	164 000	164 000
45	NART 45 R	-	NART 45 UUR	-	915		45	85	32	30	66.5	46 800	88 600	88 600
	-	NART 45 VR	-	NART 45 VUUR	935		45	85	32	30	66.5	80 300	181 000	181 000
50	NART 50 R	-	NART 50 UUR	-	980		50	90	32	30	76	48 600	95 600	95 600
	-	NART 50 VR	-	NART 50 VUUR	1 010		50	90	32	30	76	84 300	198 000	198 000

* Not a stocked range although available on request.

Every effort has been taken to ensure that the data listed in this catalogue is correct.
Finer Power Transmissions P/L will not accept liability for any damage or loss caused as a result of the data in this catalogue.

Every effort has been taken to ensure that the data listed in this catalogue is correct.
Finer Power Transmissions P/L will not accept liability for any damage or loss caused as a result of the data in this catalogue.

JAPANESE BEARINGS
Finer Power Transmissions P/L | www.finerpt.com

Roller Followers - Metric

NAST-ZZUR Separable w/Inner Ring Cage Series

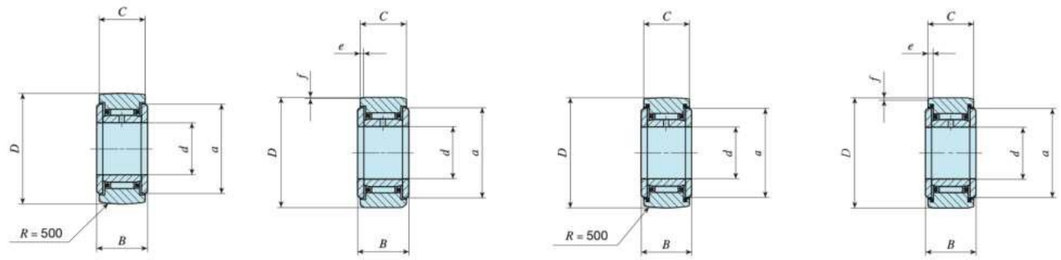

NAST···ZZR NAST···ZZ NAST···ZZUUR NAST···ZZUU

NAST-ZZUR Separable w/Inner Ring Cage Series

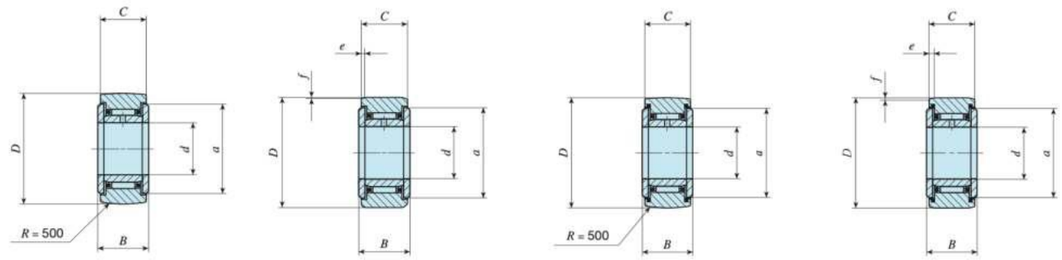

NAST···ZZR NAST···ZZ NAST···ZZUUR NAST···ZZUU

Shaft dia. mm	Identification number				Mass (Ref.) g		Boundary dimensions mm							Basic dynamic load rating C	Basic static load rating C0
	Shield type		Sealed type												
	Crowned outer ring*	Cylindrical outer ring	Crowned outer ring	Cylindrical outer ring			d	D	B	C	a	e	f	N	N
6	NAST 6 ZZR	NAST 6 ZZ	NAST 6 ZZUUR	NAST 6 ZZUU	24.5		6	19	14	13.8	14	2.5	0.8	4 160	4 550
8	NAST 8 ZZR	NAST 8 ZZ	NAST 8 ZZUUR	NAST 8 ZZUU	39		8	24	14	13.8	17.5	2.5	0.8	5 650	5 890
10	NAST 10 ZZR	NAST 10 ZZ	NAST 10 ZZUUR	NAST 10 ZZUU	65		10	30	16	15.8	23.5	2.5	0.8	9 790	9 680
12	NAST 12 ZZR	NAST 12 ZZ	NAST 12 ZZUUR	NAST 12 ZZUU	75		12	32	16	15.8	25.5	2.5	0.8	10 500	10 900
15	NAST 15 ZZR	NAST 15 ZZ	NAST 15 ZZUUR	NAST 15 ZZUU	83		15	35	16	15.8	29	2.5	0.8	12 400	14 300
17	NAST 17 ZZR	NAST 17 ZZ	NAST 17 ZZUUR	NAST 17 ZZUU	135		17	40	20	19.8	32.5	3	1	17 600	20 900
20	NAST 20 ZZR	NAST 20 ZZ	NAST 20 ZZUUR	NAST 20 ZZUU	195		20	47	20	19.8	38	3	1	19 400	24 500
25	NAST 25 ZZR	NAST 25 ZZ	NAST 25 ZZUUR	NAST 25 ZZUU	225		25	52	20	19.8	43	3	1	20 800	28 400
30	NAST 30 ZZR	NAST 30 ZZ	NAST 30 ZZUUR	NAST 30 ZZUU	400		30	62	25	24.8	50.5	4	1.2	30 500	45 400
35	NAST 35 ZZR	NAST 35 ZZ	NAST 35 ZZUUR	NAST 35 ZZUU	550		35	72	25	24.8	53.5	4	1.2	32 400	50 600
40	NAST 40 ZZR	NAST 40 ZZ	NAST 40 ZZUUR	NAST 40 ZZUU	710		40	80	26	25.8	61.5	4	1.2	35 900	61 100
45	NAST 45 ZZR	NAST 45 ZZ	NAST 45 ZZUUR	NAST 45 ZZUU	760		45	85	26	25.8	66.5	4	1.2	37 400	66 400
50	NAST 50 ZZR	NAST 50 ZZ	NAST 50 ZZUUR	NAST 50 ZZUU	830		50	90	26	25.8	76	4	1.2	38 900	71 700

* Not a stocked range although available on request.

Every effort has been taken to ensure that the data listed in this catalogue is correct.
Finer Power Transmissions P/L will not accept liability for any damage or loss caused as a result of the data in this catalogue.

Every effort has been taken to ensure that the data listed in this catalogue is correct.
Finer Power Transmissions P/L will not accept liability for any damage or loss caused as a result of the data in this catalogue.

JAPANESE BEARINGS
Finer Power Transmissions P/L | www.finerpt.com

Roller Followers - Metric

NURT Non-Separable Cage Series

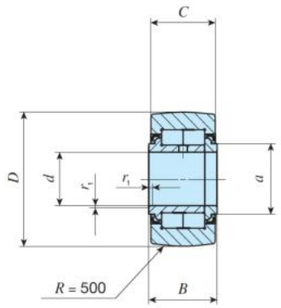

NURT···R

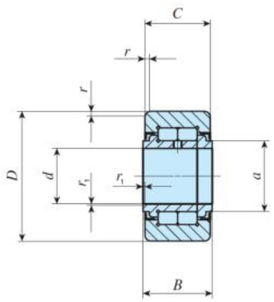

NURT

NURT Non-Separable Cage Series

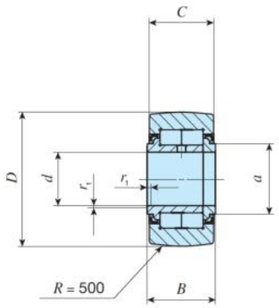

NURT···R

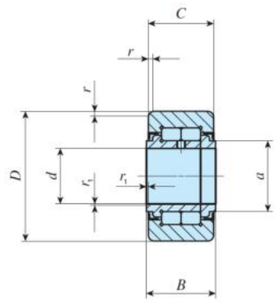

NURT

Shaft Dia. mm	Roller Followers with crowned outer ring		Mass (Ref.) g	Boundary dimensions mm								Basic dynamic load rating C	Basic static load rating C0	Maximum allowable static load
	Crowned outer ring	Cylindrical outer ring		d	D	B	C	a	rs min	r1s min		N	N	N
15	NURT 15 R	NURT 15	100	15	35	19	18	20	0.6	0.3		23 400	27 300	11 800
	NURT 15-1 R	NURT15-1	160	15	42	19	18	20	0.6	0.3		23 400	27 300	27 300
17	NURT 17 R	NURT 17	147	17	40	21	20	22	1	0.3		25 200	30 900	20 300
	NURT 17-1 R	NURT 17-1	222	17	47	21	20	22	1	0.3		25 200	30 900	30 900
20	NURT 20 R	NURT 20	245	20	47	25	24	27	1	0.3		38 900	49 000	27 200
	NURT 20-1 R	NURT 20-1	321	20	52	25	24	27	1	0.3		38 900	49 000	49 000
25	NURT 25 R	NURT 25	281	25	52	25	24	31	1	0.3		43 100	58 100	30 000
	NURT 25-1 R	NURT 25-1	450	25	62	25	24	31	1	0.3		43 100	58 100	58 100
30	NURT 30 R	NURT 30	466	30	62	29	28	38	1	0.3		58 200	75 300	35 200
	NURT 30-1 R	NURT 30-1	697	30	72	29	28	38	1	0.3		58 200	75 300	75 300
35	NURT 35 R	NURT 35	630	35	72	29	28	44	1	0.6		63 900	88 800	57 000
	NURT 35-1 R	NURT 35-1	840	35	80	29	28	44	1	0.6		63 900	88 800	88 800
40	NURT 40 R	NURT 40	817	40	80	32	30	49	1	0.6		86 500	122 000	75 300
	NURT 40-1 R	NURT 40-1	1 130	40	100	32	30	53	1	0.6		86 500	122 000	122 000
45	NURt 45 R	NURT 45	883	45	85	32	30	53	1	0.6		91 500	135 000	78 700
	NURT 45-1 R	NURT 45-1	1400	45	100	32	30	53	1	0.6		91 500	135 000	135 000
50	NURT 50 R	NURT 50	950	50	90	32	30	58	1	0.6		96 300	148 000	82 100
	NURT 50-1 R	NURT 50-1	1690	50	110	32	30	58	1	0.6		96 300	148 000	148 000

Every effort has been taken to ensure that the data listed in this catalogue is correct.
Finer Power Transmissions P/L will not accept liability for any damage or loss caused as a result of the data in this catalogue.

Every effort has been taken to ensure that the data listed in this catalogue is correct.
Finer Power Transmissions P/L will not accept liability for any damage or loss caused as a result of the data in this catalogue.

JAPANESE BEARINGS
Finer Power Transmissions P/L | www.finerpt.com
Sheave Roller Full Compliment

NAS5000 Series

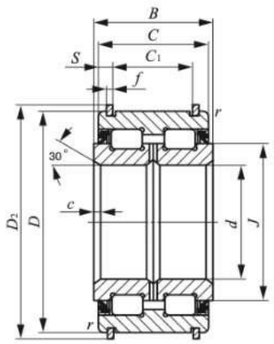

NAS50 ··· UUNR

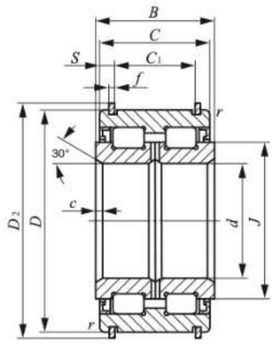

NAS50 ··· ZZNR

NAS5000 Series

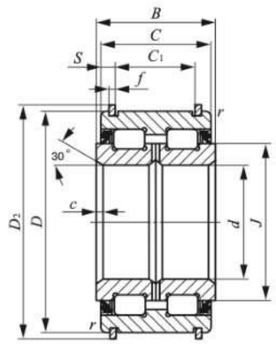

NAS50 ··· UUNR

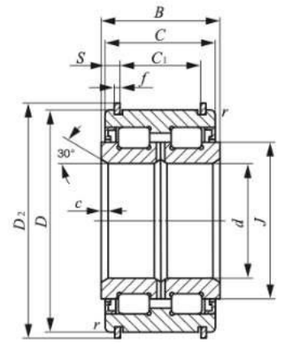

NAS50 ··· ZZNR

Shaft dia. mm	Identification number			Boundary dimensions mm												Basic dynamic load rating C N	Basic static load rating C0 N	Allowable rotational speed(2) rpm
	Sealed type	Shield type*	Mass (Ref.) kg	d	D	D2	B	C	C1	S	f	c	r x min	J				
40	NAS 5008UUNR	NAS 5008ZZNR	0.55	40	68	71.8	38	37	28	4.5	2	1.5	0.6	50		79 500	116 000	2 500
45	NAS 5009UUNR	NAS 5009ZZNR	0.7	45	75	78.8	40	39	30	4.5	2	1.5	0.6	56		95 500	144 000	2 000
50	NAS 5010UUNR	NAS 5010ZZNR	0.75	50	90	83.8	40	39	30	4.5	2	1.5	0.6	61		100 000	158 000	2 000
55	NAS 5011UUNR	NAS 5011ZZNR	1.15	55	90	94.8	46	45	34	5.5	2.5	2	0.6	68		118 000	193 000	1 800
60	NAS 5012UUNR	NAS 5012ZZNR	1.2	60	95	99.8	46	45	34	5.5	2.5	2	0.6	73		123 000	208 000	1 700
65	NAS 5013UUNR	NAS 5013ZZNR	1.3	65	100	104.8	46	45	34	5.5	2.5	2	0.6	78		128 000	224 000	1 600
70	NAS 5014UUNR	NAS 5014ZZNR	1.9	70	110	114.5	54	53	42	5.5	2.5	2	0.6	84		171 000	284 000	1 400
75	NAS 5015UUNR	NAS 5015ZZNR	2	75	115	119.5	54	53	42	5.5	2.5	2	0.6	91		179 000	308 000	1 300
80	NAS 5016UUNR	NAS 5016ZZNR	2.65	80	125	129.5	60	59	48	5.5	2.5	2	0.6	97		251 000	428 000	1 300
85	NAS 5017UUNR	NAS 5017ZZNR	2.8	85	130	134.5	60	59	48	5.5	2.5	2	0.6	101		257 000	446 000	1 200
90	NAS 5018UUNR	NAS 5018ZZNR	3.7	90	140	145.4	67	66	54	6	2.5	2.5	0.6	110		305 000	540 000	1 100
95	NAS 5019UUNR	NAS 5019ZZNR	3.9	95	145	150.4	67	66	54	6	2.5	2.5	0.6	114		312 000	562 000	1 100
100	NAS 5020UUNR	NAS 5020ZZNR	4.05	100	150	155.4	67	66	54	6	2.5	2.5	0.6	118		318 000	584 000	1 100
110	NAS 5022UUNR	NAS 5022ZZNR	6.5	110	170	175.4	80	79	65	7	2.5	3	1	130		384 000	697 000	900
120	NAS 5024UUNR	NAS 5024ZZNR	6.95	120	180	188.4	80	79	65	7	3	3	1	139.5		400 000	750 000	850

*Not a stocked range although available on request

Every effort has been taken to ensure that the data listed in this catalogue is correct.
Finer Power Transmissions P/L will not accept liability for any damage or loss caused as a result of the data in this catalogue.
Every effort has been taken to ensure that the data listed in this catalogue is correct.
Finer Power Transmissions P/L will not accept liability for any damage or loss caused as a result of the data in this catalogue.

JAPANESE BEARINGS
Finer Power Transmissions P/L | www.finerpt.com
Cylindrical Roller Full Compliment

NAG 49UU Rubber Sealed Series

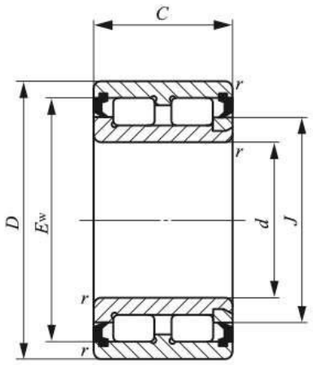

NAG49 ··· UU
($d \leqq 17$)

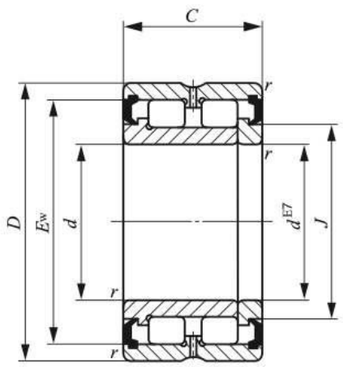

NAG49 ··· UU

NAG 49UU Rubber Sealed Series

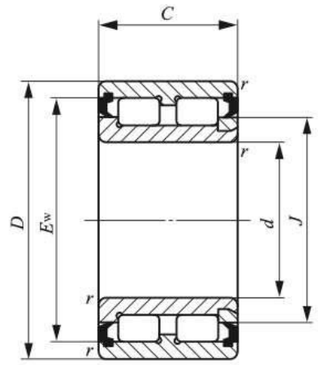

NAG49 ··· UU
($d \leqq 17$)

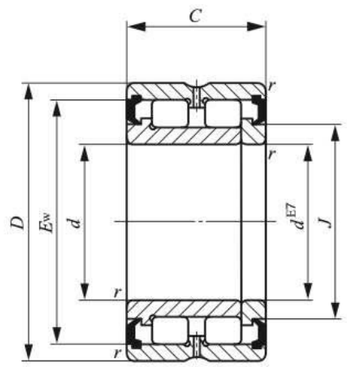

NAG49 ··· UU

Shaft dia. mm	Identification number	Mass (Ref.) g	Boundary dimensions mm							Basic dynamic load rating C N	Basic static load rating C0 N	Allowable rotational speed(2) rpm
	Full complement type		d	D	C	r a min	J	Ew				
10	NAG 4900UU	25.5	10	22	13	0.3	15.5	19.5		9 650	10 800	10 000
12	NAG 4901UU	28.5	12	24	13	0.3	17	21		10 300	12 000	9 000
15	NAG 4902UU	38	15	28	13	0.3	21	25		11 800	15 200	7 000
17	NAG 4903UU	41	17	30	13	0.3	22.5	26.5		12 300	16 500	6 500
20	NAG 4904UU	76.5	20	37	17	0.3	24	31.5		15 600	18 900	5 500
25	NAG 4905UU	89.5	25	42	17	0.3	29.5	37		17 500	23 200	4 500
30	NAG 4906UU	103	30	47	17	0.3	34	41.5		19 400	27 600	4 000
35	NAG 4907UU	172	35	55	20	0.6	40	49		28 700	43 800	3 500
40	NAG 4908UU	225	40	62	22	0.6	46	56		34 600	49 500	3 000
45	NAG 4909UU	265	45	68	22	0.6	51	61		36 400	54 700	2 500
50	NAG 4910UU	270	50	72	22	0.6	55.5	65.5		38 200	59 900	2 500
55	NAG 4911UU	395	55	80	25	1	61.5	72.5		48 100	77 700	2 000
60	NAG 4912UU	425	60	85	25	1	67	77.5		50 300	84 300	2 000
65	NAG 4913UU	455	65	90	25	1	72	83		53 200	93 000	1 900
70	NAG 4914UU	725	70	100	30	1	79	91.5		77 700	139 000	1 800
75	NAG 4915UU	775	75	105	30	1	83.5	95.5		80 000	146 000	1 700
80	NAG 4916UU	815	80	110	30	1	89.5	102		83 000	157 000	1 600

Every effort has been taken to ensure that the data listed in this catalogue is correct.
Finer Power Transmissions P/L will not accept liability for any damage or loss caused as a result of the data in this catalogue.
Every effort has been taken to ensure that the data listed in this catalogue is correct.
Finer Power Transmissions P/L will not accept liability for any damage or loss caused as a result of the data in this catalogue.

JAPANESE BEARINGS
Finer Power Transmissions P/L | www.finerpt.com
Spherical Plain Bearings

SB-A Metric Series

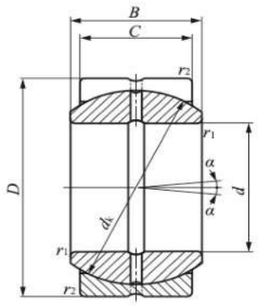

SB ··· A

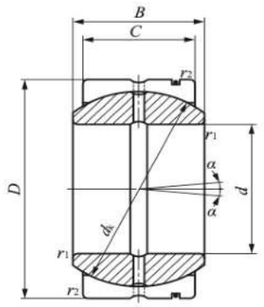

SB

SB-A Metric Series

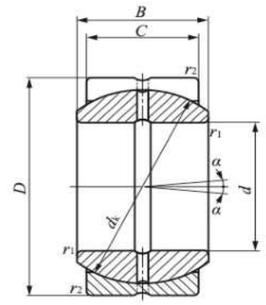

SB ··· A

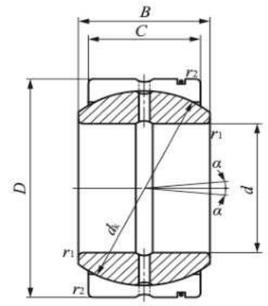

SB

Shaft dia. mm	Identification number		Mass (Ref.) kg	Boundary dimensions mm						Permissible tilting angle degree		Mounting dimensions mm				Dynamic load capacity Cd N	Static load capacity Cs N
												da		Da			
				d	D	B	C	dk	rs min			Min.	Max	Max.	Min.		
12	SB 12A	SB 122211	0.019	12	22	11	9	18	0.3	7		14	14	19.5	17	15 900	95 300
15	SB 15A	SB 152613	0.028	15	26	13	11	22	0.3	6		17.5	17.5	23.5	21	23 700	142 000
20	SB 20A	SB 203216	0.053	20	32	16	14	28	0.3	4		22.5	23	29.5	26	38 400	231 000
25	SB 25A	SB 254221	0.116	25	42	21	18	36	0.3	5		27.5	29	39.5	34	63 500	381 000
30	SB 30A	SB 305027	0.225	30	50	27	23	45	0.6	6		34.5	36	45.5	42	101 000	609 000
35	SB 35A	SB 355530	0.3	35	55	30	26	50	0.6	5		39.5	40	50.5	46.5	127 000	765 000
40	SB 40A	SB 406233	0.375	40	62	33	28	55	0.6	6		44	44	57.5	51.5	151 000	906 000
45	SB 45A	SB 457236	0.6	45	72	36	31	62	0.6	5		49.5	50.5	67.5	58	188 000	1 130 000
50	SB 50A	SB 508042	0.87	50	80	42	36	72	0.6	5		54.5	58.5	75.5	67	254 000	1 530 000
55	SB 55A	SB 559047	1.26	55	90	47	40	80	0.6	5		59.5	64.5	85.5	74.5	314 000	1 880 000

Every effort has been taken to ensure that the data listed in this catalogue is correct.
Finer Power Transmissions P/L will not accept liability for any damage or loss caused as a result of the data in this catalogue.
Every effort has been taken to ensure that the data listed in this catalogue is correct.
Finer Power Transmissions P/L will not accept liability for any damage or loss caused as a result of the data in this catalogue.

SBB-2RS Imperial Series

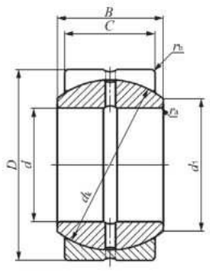

SBB

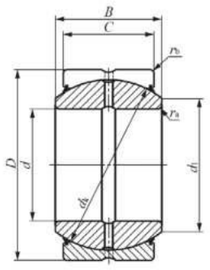

SBB···-2RS

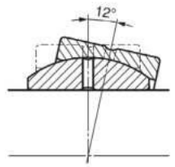

SBB

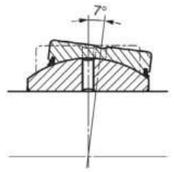

SBB···-2RS

Permissible tilting angle

Shaft dia. mm (inch)	Identification number		Mass (Ref.) kg	Boundary dimensions mm (inch)					dk mm	Radial internal clearance	Mounting dimensions mm			Dynamic load capacity Cd N	Static load capacity Cs N
	Without seal	With seals		d	D	B	C			mm Min./Max	d1	ras max Max.	rbs max Max.		
12.700 (1/2)	SBB 8	-	0.020	12.700 (1/2)	22.225 (7/8)	11.10 (7/16)	9.52 (3/8)		18	0.05/0.15	14.0	0.2	0.6	16 800	101 000
15.875 (5/8)	SBB 10	-	0.036	15.875 (5/8)	26.988 (1 1/16)	13.89 (35/64)	11.91 (15/32)		23	0.05/0.15	17.9	0.2	0.8	26 900	161 000
19.050(3/4)	SBB 12	SBB 12-2RS	0.057	19.050 (3/ 4)	31.750 (1 1/ 4)	16.66 (21/32)	14.27 (9/16)		27.5	0.08/0.18	21.4	0.6	*0.8	38 500	231 000
22.225 (7/8)	SBB 14	SBB 14-2RS	0.088	22.225 (7/ 8)	36.512 (1 7/16)	19.43 (49/64)	16.66 (21/32)		32	0.08/0.18	25	0.6	*0.8	52 300	314 000
25.4(1)	SBB 16	SBB 16-2RS	0.125	25.400 (1)	41.275 (1 5/ 8)	22.22 (7/8)	19.05 (3/4)		36	0.08/0.18	28	0.6	*0.8	67 300	404 000
31.75(1 1/4)	SBB 20	SBB 20-2RS	0.234	31.750 (1 1/ 4)	50.800 (2)	27.76 (1 1/32)	23.80 (15/16)		45	0.08/0.18	35.1	0.6	0.8	105 000	630 000
34.925 (1 3/8)	SBB 22	SBB 22-2RS	0.349	34.925 (1 3/ 8)	55.562 (2 3/16)	30.15 (1 3/16)	26.19 (1 1/32)		49	0.08/0.18	38.5	0.6	0.8	126 000	755 000
38.1 (1 1/2)	SBB 24	SBB 24-2RS	0.424	38.100 (1 1/ 2)	61.912 (2 7/16)	33.32 (1 5/16)	28.58 (1 1/8)		55	0.08/0.18	43.3	0.6	0.8	154 000	925 000
44.45 (1 3/4)	SBB 28	SBB 28-2RS	0.649	44.450 (1 3/ 4)	71.438 (2 13/16)	38.89 (1 17/32)	33.32 (1 5/16)		64	0.08/0.18	50.4	0.6	0.8	209 000	1 250 000
50.8 (2)	SBB 32	SBB 32-2RS	0.939	50.800 (2)	80.962 (3 3/16)	44.45 (1 3/4)	38.10 (1 1/2)		73	0.08/0.18	57.6	0.6	0.8	273 000	1 640 000
57.150 (2 1/4)	SBB 36	SBB 36-2RS	1.32	57.150 (2 1/ 4)	90.488 (3 9/16)	50.01 (1 31/32)	42.85 (1 11/16)		82	0.10/0.20	64.9	0.6	0.8	345 000	2 070 000
63.5 (2 1/2)	SBB 40	SBB 40-2RS	1.85	63.500 (2 1/ 2)	100.012 (3 15/16)	55.55 (2 3/16)	47.62 (1 7/8)		91	0.10/0.20	72	0.6	0.8	425 000	2 550 000
69.850 (2 3/4)	SBB 40	SBB 44-2RS	2.44	69.850 (2 3/4)	111.125 (4 3/8)	61.11 (2 13/32)	52.37 (2 1/16)		100	0.10/0.20	79	0.6	0.8	514 000	3 080 000
76.200 (3)	SBB 48	SBB 48-2RS	3.12	76.200 (3)	120.650 (4 3/ 4)	66.68 (2 5/8)	57.15 (2 1/4)		110	0.10/0.20	86.5	0.6	0.8	616 000	3 700 000
82.550 (3 1/4)	SBB 52	SBB 52-2RS	3.92	82.50 (3 1/4)	130.175 (5 1/8)	72.24 (2 27/32)	61.90 (2 7/16)		119	0.13/0.23	94.1	0.6	0.8	722 000	4 330 000
88.900 (3 1/2)	SBB 56	SBB 56-2RS	4.83	88.900 (3 1/2)	139.700 (5 1/2)	77.77 (3 1/16)	66.68 (2 5/8)		128	0.13/0.23	101.6	0.6	0.8	837 000	5 020 000
95.250 (3 3/4)	SBB 60	SBB 60-2RS	5.87	95.250 (3 3/4)	149.255 (5 7/8)	83.34 (3 9/32)	71.42 (2 13/16)		137	0.13/0.23	108.4	0.6	0.8	960 000	5 760 000
101.600 (4)	SBB 64	SBB 64-2RS	7.07	101.600 (4)	158.750 (6 1/4)	88.90 (3 1/2)	76.20 (3)		146	0.13/0.23	115.8	0.6	0.8	1 090 000	6 550 000

* The value shown is applicable to types without seals. For types with seals, the value is 0.4mm

Every effort has been taken to ensure that the data listed in this catalogue is correct.
Finer Power Transmissions P/L will not accept liability for any damage or loss caused as a result of the data in this catalogue.

JAPANESE BEARINGS
Finer Power Transmissions P/L | www.finerpt.com
Spherical Plain Bearings
SBB-2RS Imperial Series

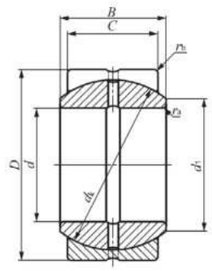

SBB

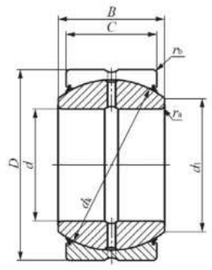

SBB···-2RS

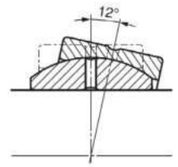

SBB

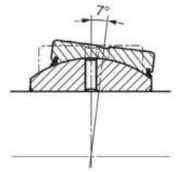

SBB···-2RS

Permissible tilting angle

Every effort has been taken to ensure that the data listed in this catalogue is correct.
Finer Power Transmissions P/L will not accept liability for any damage or loss caused as a result of the data in this catalogue.

JAPANESE BEARINGS
Finer Power Transmissions P/L | www.finerpt.com
Spherical Plain Bearings

GE-G & GE-GS-2RS Heavy Duty Series

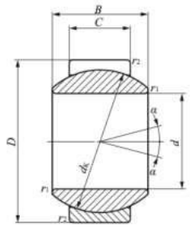

GE···G

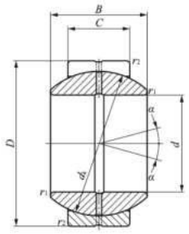

GE···GS

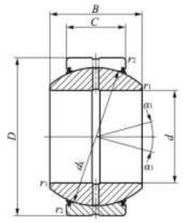

GE···GS-2RS

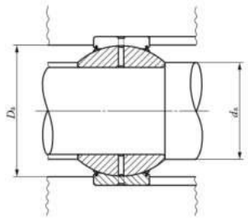

Shaft dia. mm	Identification Number		Mass (Ref.)	Dimensions (mm)								Permissible tilting angle degree		Mounting Dimensions (mm)				Dynamic load capacity	Static load capacity
	Without seals	With Seals	kg	d	D	B	C	dk	(1) r1s min	(1) r2s min		a	a1	da Min.	da Max (2)	Da Max	Da Min.	Cd N	Cs N
10	GE 10G	-	0.022	10	22	12	7	18	0.3	0.3		18	-	12.5	13	19.5	17	12 400	74 100
12	GE 12G	-	0.041	12	26	15	9	22	0.3	0.3		18	-	14.5	16	23.5	21	19 400	117 000
15	GE 15GS	GE 15GS-2RS	0.059	15	30	16	10	25	0.3	0.3		16	13	17.5	19	27.5	26	24 500	147 000
17	GE 17GS	GE 17GS-2RS	0.083	17	35	20	12	29	0.3	0.3		19	16	19.5	21	32.5	30.5	34 100	205 000
20	GE 20GS	GE 20GS-2RS	0.155	20	42	25	16	35.5	0.3	0.6		17	16	22.5	25	37.5	37	55 700	334 000
25	GE 25GS	GE 25GS-2RS	0.215	25	47	28	18	40.7	0.6	0.6		17	15	29.5	29.5	42.5	41.5	71 800	431 000
30	GE 30GS	GE 30GS-2RS	0.330	30	55	32	20	47	0.6	1		17	16	34	34	49.5	48	92 200	553 000
35	GE 35GS	GE 35GS-2RS	0.400	35	62	35	22	53	0.6	1		16	15	39.5	39.5	56.5	54.5	114 000	686 000
40	GE 40GS	GE 40GS-2RS	0.515	40	68	40	25	60	0.6	1		17	14	44.5	44.5	62.5	60	147 000	883 000
45	GE 45GS	GE 45GS-2RS	0.660	45	75	43	28	66	0.6	1		15	13	49.5	50	69.5	66	181 000	1 090 000
50	GE 50GS	GE 50GS-2RS	1.50	50	90	56	36	80	0.6	1		17	16	54.5	57	84.5	79	282 000	1 690 000
60	GE 60GS	GE 60GS-2RS	2.05	60	105	63	40	92	1	1		17	15	65.5	67	99.5	91	361 000	2 170 000
70	GE 70GS	GE 70GS-2RS	3.00	70	120	70	45	105	1	1		16	14	75.5	78	114.5	103	463 000	2 780 000
80	GE 80GS	GE 80GS-2RS	3.60	80	130	75	50	115	1	1		14	13	85.5	87	124.5	112	564 000	3 380 000
90	GE 90GS	GE 90GS-2RS	5.41	90	150	85	55	130	1	1		15	14	95.5	98	144.5	127	701 000	4 210 000
100	GE 100GS	GE 100GS-2RS	6.15	100	160	85	55	140	1	1		14	12	105.5	111	154.5	138	755 000	4 530 000
110	GE 110GS	GE 110GS-2RS	9.70	110	180	100	70	160	1	1		12	11	115.5	124.5	174.5	154	1 100 000	6 590 000
120	GE 120GS	GE 120GS-2RS	15.5	120	210	115	70	180	1	1		16	15	125.5	138.5	204.5	176	1 240 000	7 410 000

GE-G & GE-GS-2RS Heavy Duty Series

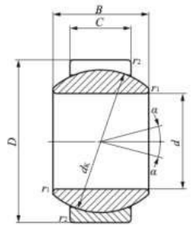

GE···G

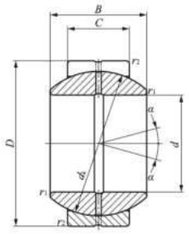

GE···GS

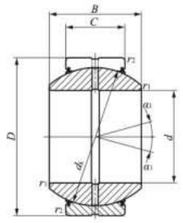

GE···GS-2RS

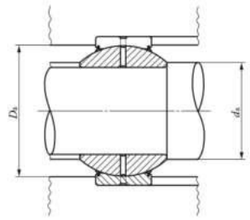

BOOK 7. PREMIUM BEARINGS
7.4 PREMIUM JAPANESE BEARINGS

Every effort has been taken to ensure that the data listed in this catalogue is correct.
Finer Power Transmissions P/L will not accept liability for any damage or loss caused as a result of the data in this catalogue.
Every effort has been taken to ensure that the data listed in this catalogue is correct.
Finer Power Transmissions P/L will not accept liability for any damage or loss caused as a result of the data in this catalogue.

JAPANESE BEARINGS
Finer Power Transmissions P/L | www.finerpt.com
Spherical Plain Bearings

GE-E & GE-ES-2RS Series

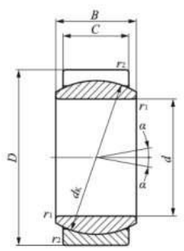

GE ··· E

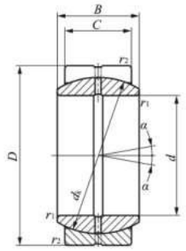

GE ··· ES

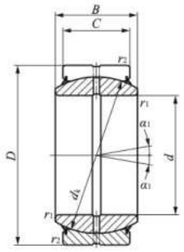

GE ··· ES-2RS

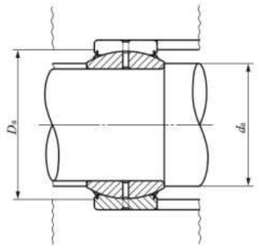

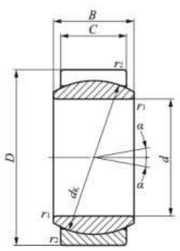

GE ··· E

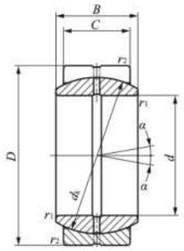

GE ··· ES

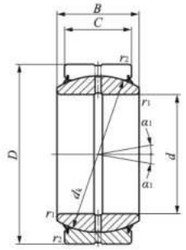

GE ··· ES-2RS

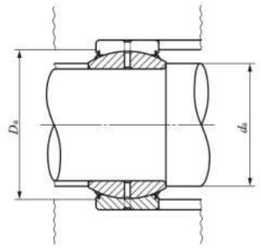

Shaft dia.	Identification Number		Mass (Ref.)	Dimensions (mm)								Permissible tilting angle degree		Mounting Dimensions (mm)				Dynamic load capacity	Static load capacity
mm	Without seals	With Seals	kg	d	D	B	C	dk	(1) r1s min	(1) r2s min		a	a1	da Min.	da Max (2)	Da Max	Da Min.	Cd N	Cs N
8	GE 8E	-	0.008	8	16	8	5	13	0.3	0.3		15	-	10	10	13.5	13	6 370	38 200
10	GE 10E	-	0.012	10	19	9	6	16	0.3	0.3		12	-	12.5	13	16.5	15.5	9 410	56 500
12	GE 12E	-	0.017	12	22	10	7	18	0.3	0.3		11	-	14.5	15	19.5	17	12 400	74 100
15	GE 15ES	GE 15ES-2RS	0.032	15	26	12	9	22	0.3	0.3		8	5	17.5	18	23.5	22.5	19 400	117 000
17	GE 17ES	GE 17ES-2RS	0.049	17	30	14	10	25	0.3	0.3		10	7	19.5	20.5	27.5	26	24 500	147 000
20	GE 20ES	GE 20ES-2RS	0.065	20	35	16	12	29	0.3	0.3		9	6	22.5	24	32.5	30.5	34 100	205 000
25	GE 25ES	GE 25ES-2RS	0.115	25	42	20	16	35.5	0.6	0.6		7	4	29	29	37.5	37	55 700	334 000
30	GE 30ES	GE 30ES-2RS	0.160	30	47	22	18	40.7	0.6	0.6		6	4	34	34	42.5	41.5	71 800	431 000
35	GE 35ES	GE 35ES-2RS	0.258	35	55	25	20	47	0.6	1		6	4	39.5	39.5	49.5	48	92 200	553 000
40	GE 40ES	GE 40ES-2RS	0.315	40	62	28	22	53	0.6	1		7	4	44.5	45	56.5	54.5	114 000	686 000
45	GE 45ES	GE 45ES-2RS	0.413	45	68	32	25	60	0.6	1		7	4	49.5	50.5	62.5	60	147 000	883 000
50	GE 50ES	GE 50ES-2RS	0.560	50	75	35	28	66	0.6	1		6	4	54.5	56	69.5	66	181 000	1 090 000
60	GE 60ES	GE 60ES-2RS	1.10	60	90	44	36	80	1	1		6	3	65.5	66.5	84.5	79	282 000	1 690 000
70	GE 70ES	GE 70ES-2RS	1.54	70	105	49	40	92	1	1		6	4	75.5	77.5	99.5	91	361 000	2 170 000
80	GE 80ES	GE 80ES-2RS	2.29	80	120	55	45	105	1	1		6	4	85.5	89	114.5	103	463 000	2 780 000
90	GE 90ES	GE 90ES-2RS	2.82	90	130	60	50	115	1	1		5	3	95.5	98	124.5	112	564 000	3 380 000
100	GE 100ES	GE 100ES-2RS	4.43	100	150	70	55	130	1	1		7	5	105.5	109.5	144.5	127	701 000	4 210 000
110	GE 110ES	GE 110ES-2RS	4.94	110	160	70	55	140	1	1		6	4	115.5	121	154.5	138	755 000	4 530 000
120	GE 120ES	GE 120ES-2RS	8.12	120	180	85	70	160	1	1		6	4	125.5	135.5	174.5	154	1 100 000	6 590 000
140	GE 140ES	GE 140ES-2RS	11.4	140	210	90	70	180	1	1		7	5	145.5	155.5	204.5	176	1 240 000	7 410 000

Every effort has been taken to ensure that the data listed in this catalogue is correct.
Finer Power Transmissions P/L will not accept liability for any damage or loss caused as a result of the data in this catalogue.
Every effort has been taken to ensure that the data listed in this catalogue is correct.
Finer Power Transmissions P/L will not accept liability for any damage or loss caused as a result of the data in this catalogue.

JAPANESE BEARINGS
Finer Power Transmissions P/L | www.finerpt.com

Spherical Plain Bearings

GE-EC & GE-EC-2RS Series (PTFE Lined)

Maintenance Free.

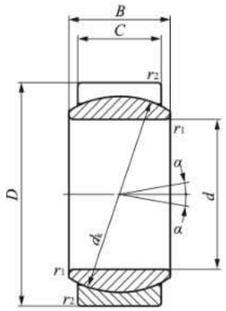

GE ··· EC

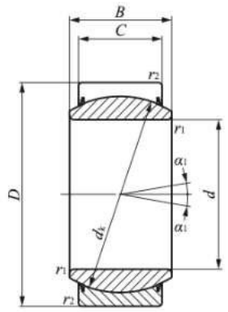

GE ··· EC-2RS

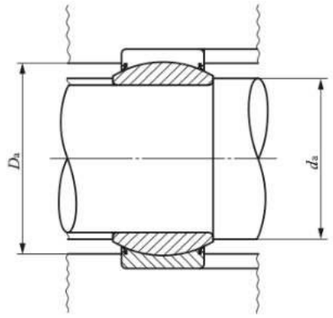

GE-EC & GE-EC-2RS Series (PTFE Lined)

Maintenance Free.

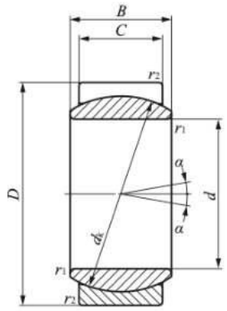

GE ··· EC

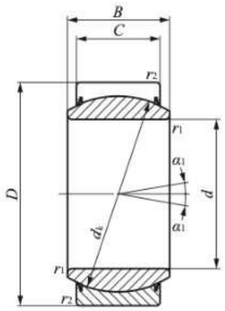

GE ··· EC-2RS

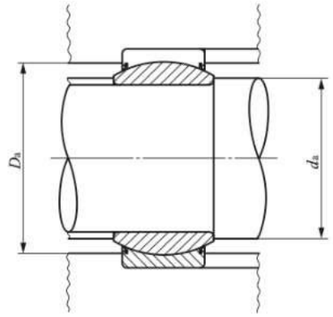

Shaft dia.	Identification Number		Mass (Ref.)	Dimensions (mm)								Permissible tilting angle degree		Mounting Dimensions (mm)				Dynamic load capacity	Static load capacity
									(1)	(1)				da		Da		Cd	Cs
mm	Without seals	With Seals	kg	d	D	B	C	dk	r1s min	r2s min		a	a1	Min.	Max (2)	Max	Min.	N	N
15	GE 15EC	-	0.032	15	26	12	9	22	0.3	0.3		8	-	17.5	18	23.5	21.5	19 400	48 500
17	GE 17EC	-	0.049	17	30	14	10	25	0.3	0.3		10	-	19.5	20.5	27.5	24.5	24 500	61 300
20	GE 20EC	-	0.065	20	35	16	12	29	0.3	0.3		9	-	22.5	24	32.5	28	34 100	85 300
25	GE 25 EC	-	0.115	25	42	20	16	35.5	0.6	0.6		7	-	29	29	37.5	34	55 700	139 000
30	GE 30EC	GE 30EC-2RS	0.160	30	47	22	18	40.7	0.6	0.6		6	4	34	34	42.5	41.5	71 800	180 000
35	-	GE 35EC-2RS	0.258	35	55	25	20	47	0.6	1		-	4	39.5	39.5	49.5	48	92 200	230 000
40	-	GE 40EC-2RS	0.315	40	62	28	22	53	0.6	1		-	4	44.5	45	56.5	54.5	114 000	286 000
45	-	GE 45EC-2RS	0.413	45	68	32	25	60	0.6	1		-	4	49.5	50.5	62.5	60	147 000	368 000
50	-	GE 50EC-2RS	0.560	50	75	35	28	66	0.6	1		-	4	54.5	56	69.5	66	181 000	453 000
60	-	GE 60EC-2RS	1.10	60	90	44	36	80	1	1		-	3	65.5	66.5	84.5	79	282 000	706 000
70	-	GE 70EC-2RS	1.54	70	105	49	40	92	1	1		-	4	75.5	77.5	99.5	91	361 000	902 000

Every effort has been taken to ensure that the data listed in this catalogue is correct.
Finer Power Transmissions P/L will not accept liability for any damage or loss caused as a result of the data in this catalogue.

Every effort has been taken to ensure that the data listed in this catalogue is correct.
Finer Power Transmissions P/L will not accept liability for any damage or loss caused as a result of the data in this catalogue.

POS Series (Metric Male)

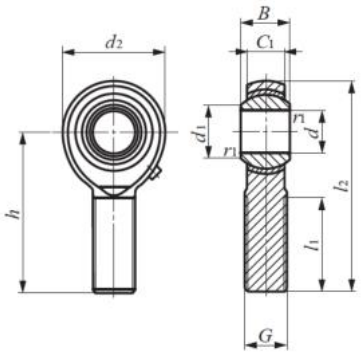

POS(···A)

Identification No.	Dimensions mm											Dynamic Load capacity	Static Load Capacity	Mass (Ref.)
	d	Thread	d2	c1	B	d3	l2	h	l1	-1	Ball dia.	Cd	Cs	g
		G								r ls min	mm (inch)	N	N	
POS 3 POS 3L	3	M 3x0.5	12	4.5	6	5.2	33	27	15	0.2	7.938 (5/16)	1 750	1 220	5.0
POS 4 POS 4L	4	M 4X0.7	14	5.3	7	6.5	37	30	17	0.2	9.525 (3/8)	2 480	2 060	8.1
POS 5 POS 5L	5	M 5X0.8	16	6	8	7.7	41	33	20	0.2	11.112 (7/16)	3 270	3 340	12.5
POS 6 POS 6L	6	M 6X1	18	6.75	9	9	45	36	22	0.2	12.700 (1/2)	4 200	4 730	19
POS 8 POS 8L	8	M8X1.25	22	9	12	10.4	53	42	25	0.2	15.875 (5/8)	7 010	8 640	32
POS 10 POS 10L	10	M 10X1.5	26	10.5	14	12.9	61	48	29	0.2	19.050 (3/4)	9 810	13 300	54
POS 12 POS12 L	12	M 12X1.75	30	12	16	15.4	69	54	33	0.2	22.225 (7/8)	13 100	16 900	85
POS 14 POS 14L	14	M 14X2	34	13.5	19	16.9	77	60	36	0.2	25.400 (1)	16 800	20 900	126
POS 16 POS16L	16	M 16X2	38	15	21	19.4	85	66	40	0.2	28.575 (1 1/8)	21 000	25 400	185
POS 18 POS 18L	18	M 18X1.5	42	16.5	23	21.9	93	72	44	0.2	31.750 260	25 700	30 200	260
POS 20 POS 20L	20	M 20X1.5	46	18	25	24.4	101	78	47	0.2	34.925 340	30 800	35 500	340
POS 22 POS 22L	22	M 22X1.5	50	20	28	25.8	109	84	51	0.2	38.100 435	37 400	41 700	435
POS 25 POS 25L	25	M 24X2	60	22	31	29.6	124	94	57	0.6	42.862 (1 11/16)	46 200	72 700	650

L = Left Hand Thread

Every effort has been taken to ensure that the data listed in this catalogue is correct.
Finer Power Transmissions P/L will not accept liability for any damage or loss caused as a result of the data in this catalogue.

POSB Series (Imperial Male)

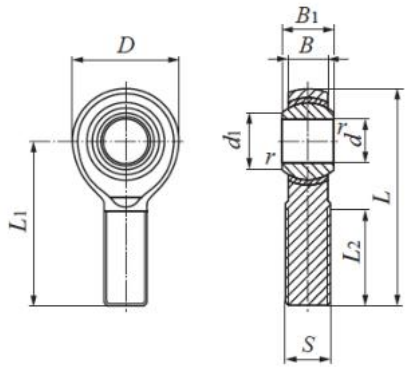

POSB

Identification No.	Dimensions mm (inch)											Dynamic Load capacity	Static Load Capacity	Mass (Ref.)
	d	Thread CLASS 3a	D	B	B1	d1	L	L1	L2	-1 r ls min	Ball dia. mm (inch)	Cd N	Cs N	g
POSB 3 POSB 3L	3/16	-32UNF	15.88	6.35	7.92	7.77	39.70	31.75	19.05	0.3	11.112	3 460	4 850	14
		(.1900)	(5/8)	(1/4)	(5/16)	(5/16)	(1 9/16)	(1 1/4)	(3/4)	(.012)	(7/16)			
POSB 4 POSB 4L	1/4	-28UNF	19.05	7.14	9.53	9.02	49.20	39.67	25.40	0.5	13.097	4 590	8 870	23
		(.2500)	(.750)	(9/32)	(3/8)	(23/64)	(1 15/16)	(1 9/16)	(1)	(.020)	(33/64)			
POSB 5 POSB 5L	5/16	-24UNF	22.23	8.74	11.10	11.35	58.72	47.63	31.75	0.5	15.875	6 800	14 200	36
		(.3125)	(.875)	(11/32)	(7/16)	(29/64)	(2 5/16)	(1 7/8)	(1 1/4)	(.020)	(5/8)			
POSB 6 POSB 6L	3/8	-24UNF	25.40	10.31	12.70	13.13	61.93	49.23	31.75	0.5	18.256	9 230	21 600	54
		(.3750)	(1)	(13/32)	(1/2)	(33/64)	(2 7/16)	(1 15/16)	(1 1/4)	(.020)	(23/32)			
POSB 7 POSB 7L	7/16	-20UNF	28.58	11.10	14.27	14.88	68.28	53.98	34.93	0.5	20.638	11 200	26 100	77
		(.4375)	(1 1/8)	(7/16)	(9/16)	(33/64)	(2 11/16)	(2 1/8)	(1 3/8)	(.020)	(13/16)			
POSB 8 POSB 8L	1/2	-20UNF	33.32	12.70	15.88	17.73	78.59	61.93	38.10	0.5	23.812	14 800	36 200	122
		(.5000)	(1 5/16)	(1/2)	(5/8)	(45/64)	(3 3/32)	(2 7/16)	(1 1/2)	(.020)	(15/16)			
POSB 10 POSB 10L	5/8	-18UNF	38.10	14.27	19.05	21.31	85.73	66.68	41.28	0.5	28.575	20 000	39 300	186
		(.6250)	(1 1/2)	(9/16)	(3/4)	(27/32)	(3 3/8)	(2 5/8)	(1 5/8)	(.020)	(1 1/8)			
POSB 12 POSB 12L	3/4	-16UNF	44.45	17.45	22.23	24.84	95.25	73.03	44.45	0.5	33.338	28 500	55 000	295
		(.7500)	(1 3/4)	(11/16)	(7/8)	(63/64)	(3 3/4)	(2 7/8)	(1 3/4)	(.020)	(1 5/16)			
POSB 16 POSB 16L	1	-12UNF	69.85	25.40	34.93	32.23	139.70	104.78	53.98	0.5	47.625	59 300	112 000	1129
		(1.2500)	(2 3/4)	(1)	(1 3/8)	(1 17/64)	(5 1/2)	(4 1/8)	(2 1/8)	(.020)	(1 7/8)			

L = Left Hand Thread

Every effort has been taken to ensure that the data listed in this catalogue is correct.
Finer Power Transmissions P/L will not accept liability for any damage or loss caused as a result of the data in this catalogue.

JAPANESE BEARINGS
Finer Power Transmissions P/L | www.finerpt.com
Rod Ends with Female Thread

PHS Series (Metric Female)

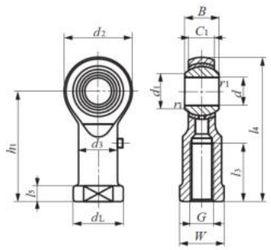

PHS(···A)

PHS Series (Metric Female)

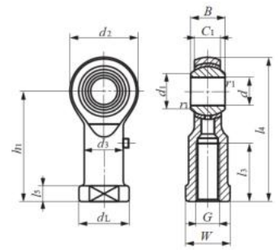

PHS(···A)

Identification No.	Mass (Ref.)	Boundary Dimensions mm											Boundary Dimensions mm					Dynamic Load capacity	Static Load Capacity
		d	Thread	D2	C1	B	D1	l4	h1	l3	l5		W	d3	dL	-1	Ball dia.	Cd	Cs
	g		G													rs min	mm (inch)	N	N
PHS 3 PHS 3L	5.7	3	M 3X0.5	12	4.5	6	5.2	27	21	10	3		5.5	5	6.5	0.2	7.938 (5/16)	1 750	3 670
PHS 4 PHS 4L	11.9	4	M 4X0.7	14	5.3	7	6.5	31	24	12	4		8	8	9.5	0.2	9.525 (3/8)	2 480	4 680
PHS 5 PHS 5L	16.5	5	M 5X0.8	16	6	8	7.7	35	27	14	4		9	9	11	0.2	11.112 (7/16)	3 270	5 730
PHS 6 PHS 6L	25	6	M 6X1	18	6.75	9	9	39	30	14	5		11	10	13	0.2	12.700 (1/2)	4 200	6 910
PHS 8 PHS 8L	43	8	M 8X1.25	22	9	12	10.4	47	36	17	5		14	12.5	16	0.2	15.875 (5/8)	7 010	10 200
PHS 10 PHS 10L	72	10	M 10X1.5	26	10.5	14	12.9	56	43	21	6.5		17	15	19	0.2	19.050 (3/4)	9 810	13 300
PHS 12 PHS 12L	107	12	M 12X1.75	30	12	16	15.4	65	50	24	6.5		19	17.5	22	0.2	22.225 (7/8)	13 100	16 900
PHS 14 PHS 14L	160	14	M 14X2	34	13.5	19	16.9	74	57	27	8		22	20	25	0.2	25.400 (1)	16 800	20 900
PHS 16 PHS 16L	210	16	M 16X2	38	15	21	19.4	83	64	33	8		22	22	27	0.2	28.575 (1 1/8)	21 000	25 400
PHS 18 PHS 18L	295	18	M 18X1.5	42	16.5	23	21.9	92	71	36	10		27	25	31	0.2	31.750 (1 1/4)	25 700	30 200
PHS 20 PHS 20L	380	20	M 20X1.5	46	18	25	24.4	100	77	40	10		30	27.5	34	0.2	34.925 (1 3/8)	30 800	35 500
PHS 22 PHS 22L	490	22	M 22X1.5	50	20	28	25.8	109	84	43	12		32	30	37	0.2	38.100 (1 1/2)	37 400	41 700
PHS 25 PHS 25L	750	25	M 24X2	60	22	31	29.6	124	94	48	12		36	33.5	42	0.6	42.862 (1 11/16)	46 200	72 700

L = Left Hand Thread

Every effort has been taken to ensure that the data listed in this catalogue is correct.
Finer Power Transmissions P/L will not accept liability for any damage or loss caused as a result of the data in this catalogue.
Every effort has been taken to ensure that the data listed in this catalogue is correct.
Finer Power Transmissions P/L will not accept liability for any damage or loss caused as a result of the data in this catalogue.

JAPANESE BEARINGS
Finer Power Transmissions P/L | www.finerpt.com
Rod Ends with Female Thread

PHSB Series (Imperial Female)

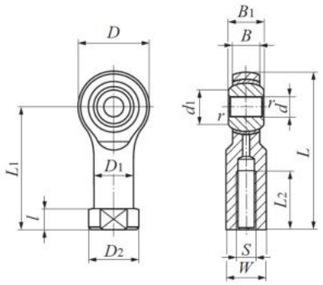

PHSB

PHSB Series (Imperial Female)

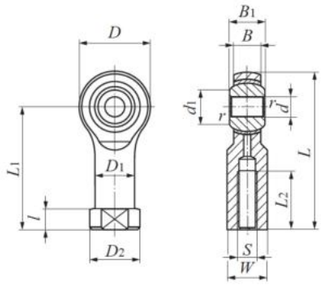

PHSB

Identificatino No.	Mass (Ref.)	Boundary Dimensions mm								Boundary Dimensions mm								Dynamic Load capacity	Static Load Capacity
		d	Thread	D	B	B1	d1	L		l	L1	L2	W	D1	D2	-1	Ball dia.	Cd	Cs
	g		S CLASS 3b													rs min	mm (inch)	N	N
PHSB 3	14	3/16	-32UNF	15.88	6.35	7.92	7.77	34.93		4.75	26.97	14.27	7.92	7.92	10.31	0.3	11.112	3 460	9 090
PHSB 3L			(.1900)	(.625)	(.250)	(.312)	(.306)	(1.375)		(.187)	(1.062)	(.562)	(.312)	(.312)	(.406)	(.012)	(7/16)		
PHSB 4	23	1/4	-28UNF	19.05	7.14	9.53	9.02	42.85		4.75	33.32	19.05	9.53	9.53	11.89	0.5	13.097	4 590	13 200
PHSB 4L			(.2500)	(.750)	(.281)	(.375)	(.355)	(1.687)		(.187)	(1.312)	(.750)	(.375)	(.375)	(.468)	(.020)	(33/64)		
PHSB 5	36	5/16	-24UNF	22.23	8.74	11.10	11.35	46.02		4.75	34.93	19.05	11.10	11.10	12.70	0.5	15.875	6 800	16 500
PHSB 5L			(.3125)	(.875)	(.344)	(.437)	(.447)	(1.812)		(.187)	(1.375)	(.750)	(.437)	(.437)	(.500)	(.020)	(5/8)		
PHSB 6	59	3/8	-24UNF	25.40	10.31	12.70	13.13	53.98		6.35	41.28	23.80	14.27	14.27	17.45	0.5	18.256	9 230	21 600
PHSB 6L			(.3750)	(1.000)	(.406)	(.500)	(.517)	(2.125)		(.250)	(1.625)	(.937)	(.562)	(.562)	(.687)	(.020)	(23/32)		
PHSB 7	82	7/16	-20UNF	28.58	11.10	14.27	14.88	60.33		6.35	46.02	26.97	15.88	15.88	19.05	0.5	20.638	11 200	26 100
PHSB 7L			(.4375)	(1.125)	(.437)	(.562)	(.586)	(2.375)		(.250)	(1.812)	(1.062)	(.625)	(.625)	(.750)	(.020)	(13/16)		
PHSB 8	132	1/2	-20UNF	33.32	12.70	15.88	17.73	70.64		6.35	53.98	30.15	19.05	19.05	22.23	0.5	23.812	14 800	36 200
PHSB 8L			(.5000)	(1.312)	(.500)	(.625)	(.698)	(2.781)		(.250)	(2.125)	(1.187)	(.750)	(.750)	(.875)	(.020)	(15/16)		
PHSB 10	191	5/8	-18UNF	38.10	14.27	19.05	21.31	82.55		7.92	63.50	38.10	22.23	22.23	25.40	0.5	28.575	20 000	39 300
PHSB 10L			(.6250)	(1.500)	(.562)	(.750)	(.839)	(3.250)		(.312)	(2.500)	(1.500)	(.875)	(.875)	(1.000)	(.020)	(1 1/8)		
PHSB 12	286	3/4	-16UNF	44.45	17.45	22.23	24.84	95.25		7.92	73.03	44.45	25.40	25.40	28.58	0.5	33.338	28 500	55 000
PHSB 12L			(.7500)	(1.750)	(.687)	(.875)	(.978)	(3.750)		(.312)	(2.875)	(1.750)	(1.000)	(1.000)	(1.125)	(.020)	(1 5/16)		
PHSB 16	998	1	-12UNF	69.85	25.40	34.93	32.23	139.70		11.07	104.78	53.98	38.10	38.10	44.45	0.5	47.625	59 300	86 800
PHSB 16L			(1.2500)	(2.750)	(1.000)	(1.375)	(1.269)	(5.500)		(.436)	(4.125)	(2.125)	(1.500)	(1.500)	(1.750)	(.020)	(1 7/8)		

L = Left Hand Thread

Every effort has been taken to ensure that the data listed in this catalogue is correct.
Finer Power Transmissions P/L will not accept liability for any damage or loss caused as a result of the data in this catalogue.
Every effort has been taken to ensure that the data listed in this catalogue is correct.
Finer Power Transmissions P/L will not accept liability for any damage or loss caused as a result of the data in this catalogue.

Spherical Plain Bearings

SDTZ Part#	Description	SKF Part#	INA Part#	IKO Part#
GE---ES	STD DUTY,METRIC ,GROOVE AND HOLES	GE---ES	GE---DO	GE---ES
GE---ET	STD DUTY, TEFLON LINED, MAINT FREE	GE---TE	GE---UK	GE---EC
GEG---ES	MED DUTY, METRIC,GROOVE AND HOLES	GEH---ES	GE---FO	GE---GS
GEG---ET	MED DUTY ,METRIC, TEFLON LINED	GEH---TE	GE---FW	-
GEZ---ES	STD DUTY,INCH, GROOVE AND HOLES	GEZ---ES	GE---ZO	SBB
GEEM-ES	STD DUTY,METRIC WIDE INNER, GROOVE AND HOLES	GEM---ES	GE---HO	-

Rod Ends - Metric

SDTZ Part#	Description	LS Part#	SKF Part#	INA Part#	IKO Part#	Heim Part#	Aurora Part#
PHS-3	METRIC - FEMALE - RH - 3MM	SIBP3S	SIKAC3M	GIKFR3PB	PHS-3	SF3	MW-M3
PHS-4	METRIC - FEMALE - RH - 4MM	SIBP4S	SIKAC4M	GIKFR4PB	PHS-4	SF4	MW-M4
PHS-5	METRIC - FEMALE - RH - 5MM	SIBP5S	SIKAC5M	GIKFR5PB	PHS-5	SF5	MW-M5
PHS-6	METRIC - FEMALE - RH - 6MM	SIBP6S	SIKAC6M	GIKFR6PB	PHS-6	SF6	MW-M6
PHS-8	METRIC - FEMALE - RH - 8MM	SIBP8S	SIKAC8M	GIKFR8PB	PHS-8	SF8	MW-M8Z
PHS-10	METRIC - FEMALE - RH - 10MM	SIBP10S	SIKAC10M	GIKFR10PB	PHS-10	SF10	MW-M10Z
PHS-12	METRIC - FEMALE - RH - 12MM	SIBP12S	SIKAC12M	GIKFR12PB	PHS-12	SF12	MW-M12Z
PHS-14	METRIC - FEMALE - RH - 14MM	SIBP14S	SIKAC14M	GIKFR14PB	PHS-14	SF14	MW-M14Z
PHS-16	METRIC - FEMALE - RH - 16MM	SIBP16S	SIKAC16M	GIKFR16PB	PHS-16	SF16	MW-M16Z
PHS-18	METRIC - FEMALE - RH - 18MM	SIBP18S	SIKAC18M	GIKFR18PB	PHS-18	SF18	MW-M18Z
PHS-20	METRIC - FEMALE - RH - 20MM	SIBP20S	SIKAC20M	GIKFR20PB	PHS-20	SF20	MW-M20Z
PHS-22	METRIC - FEMALE - RH - 22MM	SIBP22S	SIKAC22M	GIKFR22PB	PHS-22	SF22	MW-M22Z
PHS-25	METRIC - FEMALE - RH - 25MM	SIBP25S	SIKAC25M	GIKFR25PB	PHS-25	SF25	MW-M25Z
PHS-3L	METRIC - FEMALE - LH - 3MM	SILBP3S	SILKAC3M	GIKFL3PB	PHS-3L	SFL3	MG-M3
PHS-4L	METRIC - FEMALE - LH - 4MM	SILBP4S	SILKAC4M	GIKFL4PB	PHS-4L	SFL4	MG-M4
PHS-5L	METRIC - FEMALE - LH - 5MM	SILBP5S	SILKAC5M	GIKFL5PB	PHS-5L	SFL5	MG-M5
PHS-6L	METRIC - FEMALE - LH - 6MM	SILBP6S	SILKAC6M	GIKFL6PB	PHS-6L	SFL6	MG-M6
PHS-8L	METRIC - FEMALE - LH - 8MM	SILBP8S	SILKAC8M	GIKFL8PB	PHS-8L	SFL8	MG-M8Z
PHS-10L	METRIC - FEMALE - LH - 10MM	SILBP10S	SILKAC10M	GIKFL10PB	PHS-10L	SFL10	MG-M10Z
PHS-12L	METRIC - FEMALE - LH - 12MM	SILBP12S	SILKAC12M	GIKFL12PB	PHS-12L	SFL12	MG-M12Z
PHS-14L	METRIC - FEMALE - LH - 14MM	SILBP14S	SILKAC14M	GIKFL14PB	PHS-14L	SFL14	MG-M14Z
PHS-16L	METRIC - FEMALE - LH - 16MM	SILBP16S	SILKAC16M	GIKFL16PB	PHS-16L	SFL16	MG-M16Z
PHS-18L	METRIC - FEMALE - LH - 18MM	SILBP18S	SILKAC18M	GIKFL18PB	PHS-18L	SFL18	MG-M18Z
PHS-20L	METRIC - FEMALE - LH - 20MM	SILBP20S	SILKAC20M	GIKFL20PB	PHS-20L	SFL20	MG-M20Z
PHS-22L	METRIC - FEMALE - LH - 22MM	SILBP22S	SILKAC22M	GIKFL22PB	PHS-22L	SFL22	MG-M22Z
PHS-25L	METRIC - FEMALE - LH - 25MM	SILBP25S	SILKAC25M	GIKFL25PB	PHS-25L	SFL25	MG-M25Z
POS-3	METRIC - MALE - RH - 3MM	SABP3S	SAKAC3M	GAKFR3PB	POS-3	SM3	MM-M3
POS-4	METRIC - MALE - RH - 4MM	SABP4S	SAKAC4M	GAKFR4PB	POS-4	SM4	MM-M4
POS-5	METRIC - MALE - RH - 5MM	SABP5S	SAKAC5M	GAKFR5PB	POS-5	SM5	MM-M5
POS-6	METRIC - MALE - RH - 6MM	SABP6S	SAKAC6M	GAKFR6PB	POS-6	SM6	MM-M6
POS-8	METRIC - MALE - RH - 8MM	SABP8S	SAKAC8M	GAKFR8PB	POS-8	SM8	MM-M8Z
POS-10	METRIC - MALE - RH - 10MM	SABP10S	SAKAC10M	GAKFR10PB	POS-10	SM10	MM-M10Z
POS-12	METRIC - MALE - RH - 12MM	SABP12S	SAKAC12M	GAKFR12PB	POS-12	SM12	MM-M12Z
POS-14	METRIC - MALE - RH - 14MM	SABP14S	SAKAC14M	GAKFR14PB	POS-14	SM14	MM-M14Z
POS-16	METRIC - MALE - RH - 16MM	SABP16S	SAKAC16M	GAKFR16PB	POS-16	SM16	MM-M16Z
POS-18	METRIC - MALE - RH - 18MM	SABP18S	SAKAC18M	GAKFR18PB	POS-18	SM18	MM-M18Z
POS-20	METRIC - MALE - RH - 20MM	SABP20S	SAKAC20M	GAKFR20PB	POS-20	SM20	MM-M20Z
POS-22	METRIC - MALE - RH - 22MM	SABP22S	SAKAC22M	GAKFR22PB	POS-22	SM22	MM-M22Z
POS-25	METRIC - MALE - RH - 25MM	SABP25S	SAKAC25M	GAKFR25PB	POS-25	SM25	MM-M25Z
POS-3L	METRIC - MALE - LH - 3MM	SALBP3S	SALKAC3M	GAKFL3PB	POS-3L	SML3	MB-M3
POS-4L	METRIC - MALE - LH - 4MM	SALBP4S	SALKAC4M	GAKFL4PB	POS-4L	SML4	MB-M4
POS-5L	METRIC - MALE - LH - 5MM	SALBP5S	SALKAC5M	GAKFL5PB	POS-5L	SML5	MB-M5

Every effort has been taken to ensure that the data listed in this catalogue is correct.
Finer Power Transmissions P/L will not accept liability for any damage or loss caused as a result of the data in this catalogue.

Rod Ends - Metric

SDTZ Part#	Description	LS Part#	SKF Part#	INA Part#	IKO Part#	Heim Part#	Aurora Part#
POS-6L	METRIC - MALE - LH - 6MM	SALBP6S	SALKAC6M	GAKFL6PB	POS-6L	SML6	MB-M6
POS-8L	METRIC - MALE - LH - 8MM	SALBP8S	SALKAC8M	GAKFL8PB	POS-8L	SML8	MB-M8Z
POS-10L	METRIC - MALE - LH - 10MM	SALBP10S	SALKAC10M	GAKFL10PB	POS-10L	SML10	MB-M10Z
POS-12L	METRIC - MALE - LH - 12MM	SALBP12S	SALKAC12M	GAKFL12PB	POS-12L	SML12	MB-M12Z
POS-14L	METRIC - MALE - LH - 14MM	SALBP14S	SALKAC14M	GAKFL14PB	POS-14L	SML14	MB-M14Z
POS-16L	METRIC - MALE - LH - 16MM	SALBP16S	SALKAC16M	GAKFL16PB	POS-16L	SML16	MB-M16Z
POS-18L	METRIC - MALE - LH - 18MM	SALBP18S	SALKAC18M	GAKFL18PB	POS-18L	SML18	MB-M18Z
POS-20L	METRIC - MALE - LH - 20MM	SALBP20S	SALKAC20M	GAKFL20PB	POS-20L	SML20	MB-M20Z
POS-22L	METRIC - MALE - LH - 22MM	SALBP22S	SALKAC22M	GAKFL22PB	POS-22L	SML22	MB-M22Z
POS-25L	METRIC - MALE - LH - 25MM	SALBP25S	SALKAC25M	GAKFL25PB	POS-25L	SML25	MB-M25Z
PHSB-3	IMPERIAL - FEMALE - RH - 3/16"	SIZP4S	-	-	PHSB-3	HF3	MW-3
PHSB-4	IMPERIAL - FEMALE - RH - 1/4"	SIZP6S	-	-	PHSB-4	HF4	MW-4
PHSB-5	IMPERIAL - FEMALE - RH - 5/16"	SIZP7S	-	-	PHSB-5	HF5	MW-5
PHSB-6	IMPERIAL - FEMALE - RH - 3/8"	SIZP9S	-	-	PHSB-6	HF6	MW-6
PHSB-7	IMPERIAL - FEMALE - RH - 7/16"	SIZP11S	-	-	PHSB-7	HF7	MW-7
PHSB-8	IMPERIAL - FEMALE - RH - 1/2"	SIZP12S	-	-	PHSB-8	HF8	MW-8
PHSB-10	IMPERIAL - FEMALE - RH - 5/8"	SIZP15S	-	-	PHSB-10	HF10	MW-10

Every effort has been taken to ensure that the data listed in this catalogue is correct.
Finer Power Transmissions P/L will not accept liability for any damage or loss caused as a result of the data in this catalogue.

Rod Ends - Imperial

SDTZ Part#	Description	LS Part#	SKF Part#	INA Part#	IKO Part#	Heim Part#	Aurora Part#
PHSB-12	IMPERIAL - FEMALE - RH - 3/4"	SIZP19S	-	-	PHSB-12	HF12	MW-12
PHSB-16	IMPERIAL - FEMALE - RH - 1"	SIZP25S	-	-	PHSB-16	HF16	MW-16
PHSB-3L	IMPERIAL - FEMALE - LH - 3/16"	SILZP4S	-	-	PHSB-3L	HFL3	MG-3
PHSB-4L	IMPERIAL - FEMALE - LH - 1/4"	SILZP6S	-	-	PHSB-4L	HFL4	MG-4
PHSB-5L	IMPERIAL - FEMALE - LH - 5/16"	SILZP7S	-	-	PHSB-5L	HFL5	MG-5
PHSB-6L	IMPERIAL - FEMALE - LH - 3/8"	SILZP9S	-	-	PHSB-6L	HFL6	MG-6
PHSB-7L	IMPERIAL - FEMALE - LH - 7/16"	SILZP11S	-	-	PHSB-7L	HFL7	MG-7
PHSB-8L	IMPERIAL - FEMALE - LH - 1/2"	SILZP12S	-	-	PHSB-8L	HFL8	MG-8
PHSB-10L	IMPERIAL - FEMALE - LH - 5/8"	SILZP15S	-	-	PHSB-10L	HFL10	MG-10
PHSB-12L	IMPERIAL - FEMALE - LH - 3/4"	SLIZP19S	-	-	PHSB-12L	HFL12	MG-12
PHSB-16L	IMPERIAL - FEMALE - LH - 1"	SILZP25S	-	-	PHSB-16L	HFL16	MG-16
POSB-3	IMPERIAL - MALE - RH - 3/16"	SAZP4S	-	-	POSB-3	HM3	MM-3
POSB-4	IMPERIAL - MALE - RH - 1/4"	SAZP6S	-	-	POSB-4	HM4	MM-4
POSB-5	IMPERIAL - MALE - RH - 5/16"	SAZP7S	-	-	POSB-5	HM5	MM-5
POSB-6	IMPERIAL - MALE - RH - 3/8"	SAZP9S	-	-	POSB-6	HM6	MM-6
POSB-7	IMPERIAL - MALE - RH - 7/16"	SAZP11S	-	-	POSB-7	HM7	MM-7
POSB-8	IMPERIAL - MALE - RH - 1/2"	SAZP12S	-	-	POSB-8	HM8	MM-8
POSB-10	IMPERIAL - MALE - RH - 5/8"	SAZP15S	-	-	POSB-10	HM10	MM-10
POSB-12	IMPERIAL - MALE - RH - 3/4"	SAZP19S	-	-	POSB-12	HM12	MM-12
POSB-16	IMPERIAL - MALE - RH - 1"	SAZP25S	-	-	POSB-16	HM16	MM-16
POSB-3L	IMPERIAL - MALE - LH - 3/16"	SALZP4S	-	-	POSB-3L	HML3	MB-3
POSB-4L	IMPERIAL - MALE - LH - 1/4"	SALZP6S	-	-	POSB-4L	HML4	MB-4
POSB-5L	IMPERIAL - MALE - LH - 5/16"	SALZP7S	-	-	POSB-5L	HML5	MB-5
POSB-6L	IMPERIAL - MALE - LH - 3/8"	SALZP9S	-	-	POSB-6L	HML6	MB-6
POSB-7L	IMPERIAL - MALE - LH - 7/16"	SALZP11S	-	-	POSB-7L	HML7	MB-7
POSB-8L	IMPERIAL - MALE - LH - 1/2"	SALZP12S	-	-	POSB-8L	HML8	MB-8
POSB-10L	IMPERIAL - MALE - LH - 5/8"	SALZP15S	-	-	POSB-10L	HML10	MB-10
POSB-12L	IMPERIAL - MALE - LH - 3/4"	SALZP19S	-	-	POSB-12L	HML12	MB-12
POSB-16L	IMPERIAL - MALE - LH - 1"	SALZP25S	-	-	POSB-16L	HML16	MB-16

Every effort has been taken to ensure that the data listed in this catalogue is correct.
Finer Power Transmissions P/L will not accept liability for any damage or loss caused as a result of the data in this catalogue.

Needle Roller Bearings

IKO	KOYO/TOR	INA	FAG	SKF	MCGILL	Descripion
AS	AS	AS	AS	AS	-	NR - Thrust Washer
AZK		K	K	K	-	NR - Thrust Cage & Roller
BA	J	SCE	-	-	-	NR - Shell Type w/Oil Hole
BHA	JH	SCH	-	-	-	NR HD - Shell Type w/Oil Hole
BR	HJ	NCS	-	-	MR	NR - w/o Inner Ring
CF...	-	KR...X	KR...DZ	KR...X	MCFR...X	CF - Cyl Outer Ring
CF...B	-	KR...XSK	-	KR...XSK	MCFR...BX	CF - Hex Sealed cyl. Outer Ring
CF...BR	-	KR...SK	-	KR...SK	MCFR...B	CF - Hex Sealed Crowned Outer Ring
CF...FB	-	-	-	-	-	CF- Stainsless Steel Hex Sealed Cyl. Outer ring
CF...FBR	-	-	-	-	-	CF- Stainsless Steel Hex Sealed Crowned Outer ring
CF...R	-	KR	KR	KR	MCFR	CF - Crowned Outer Ring
CF...V	-	KRV...X	-	KRV...X	MCF...X	CF - Full Comp
CF...VB	-	KRV...XSK	-	KRV...XSK	MCF...BX	CF - Full Comp Hex Sealed, cyl. Outer Ring
CF...VBR	-	KRV...SK	-	KRV...SK	MCF...B	CF - Full Comp Hex Sealed, Crowned. Outer Ring
CF...VR	-	KRV	-	KRV	MCF	CF - Full Comp, Crowned Outer Ring
CFE	-	KRE...X	-	-	-	CF - Eccentric Collar, Cyl. Outer Ring
CFE...B	-	KRE...XSK	-	-	-	CF - Eccentric Collar, Hex, Sealed Cyl. Outer Ring
CFE...BR	-	KRE...SK	-	-	-	CF - Eccentric Collar, Hex, Sealed Crowned. Outer Ring
CFE...R	-	KRE	-	-	-	CF - Eccentric Collar, Crowned Outer Ring
CFE...V	-	KRVE...X	-	-	-	CF - Eccentric Collar, Full Comp, Cyl Outer Ring
CFE...VB	-	KRVE...XSK	-	-	-	CF - Eccentric Collar, Hex, Sealed Cyl. Outer Ring
CFE...VBR	-	KRVE...SK	-	-	-	CF - Eccentric Collar,Full comp, Hex, Sealed Crowned. Outer Ring
CFE...VR	-	KRVE	-	-	-	CF - Eccentric Collar, Full Comp, Crowned Outer Ring
CR...	-	CFC	-	-	-	CF - Cyl Outer Ring
CR...B	-	CFC...SK	-	-	-	CF- Hex Sealed, cyl. Outer Ring
CR...BR	-	CFC...YSK	-	-	-	CF- Hex Sealed, Crowned Outer Ring
CR...R	-	CFC...Y	-	-	-	CF- Crowned Outer Ring
CR...V	CR	CF	-	-	CF	CF- Full Comp Slotted, Sealed Cyl. Outer Ring
CR...VB	CRB	CF...SK	-	-	CF...B	CF - Full Comp, HEX, sealed Cyl. Outer ring
CR...VBR	CRBC	CF...YSK	-	-	CCF...B	CF - Full comp, HEX, sealed Crowned Outer ring
CR...VR	CRC	CF...Y	-	-	CCF	CF - Full Comp, Crowned Outer Ring
CRH...VB	-	-	-	-	CFH...B	CF - Full Comp, HD hex Sealed, cyl Outer Ring
CRH...VBR	-	-	-	-	CCFH...B	CF - Full Comp, HD hex Sealed, Crowned Outer Ring
CRY...V	-	-	-	-	CYR	RF - Non Sep, Full Comp, Sealed cyl. Outer Ring
CRY...VR	-	-	-	-	CCYR	RF - Non Sep, Full Comp, Sealed Crowned. Outer Ring
GBR	-	-	-	-	GR	NR - Machined
GS	GS	GS	GS	GS	-	NR - Thrust, Outer ring/Housing Washer
IRB	IR	SI	-	-	-	NR - Shell Type - Inner Ring
IRT	JR	IR	JR	IR	-	NR - Shell Type - Inner Ring
KT	FWJV	K	K	K	-	NR - Cage
KT...EG		KZK	K...FV	KZK	-	NR - Cage
KTV...EG		KBK	K...FKIV	KBK	-	NR - Cage
LRB	IR	PI	-	-	MI	NR - Machined, Inner Ring
LRBZ	IR	-	-	-	MI	NR - Machined, Inner Ring
LRT	JR	IR	JR	IR	-	NR - Machined - Inner Ring
LRTZ	JRZ	IR	JRZ	IRZ	-	NR - Machined - Inner Ring
NA	NA	NA	NA	NA	-	NR - Machined
NAF	-	NAO	NAO	NAO	-	NR - Machined
NART...R	NATR	NATR	NATR	NATR	MCYRR	RF - Non - Sep, sealed, Crowned Outer Ring
NART...VR	-	NATV	-	NATV	MCYR	RF - Non Sep, Full Comp, Sealed Crowned outer Ring
NAS ...NR	DC	SL04	NNF	NNF	-	Full Comp Sheave Roller Sealed Snap Ring
NAST	STO...DZ	STO...X	STO...DZ	STO...X	-	RF - sep. w/Inner Ring, Crowned Outer Ring
NAST...R	STO	STO	STO	STO	-	RF - sep w/ Inner Ring, Sealed, Crowned Outer Ring
NATA	-	NKIA	NKJA	NKIA	-	Comb NR with Angular Contact
NATB	-	NKIB	NKJB	NKIB	-	Comb NR with 3-Point Contact

Every effort has been taken to ensure that the data listed in this catalogue is correct.
Finer Power Transmissions P/L will not accept liability for any damage or loss caused as a result of the data in this catalogue.

Needle Roller Bearings

IKO	KOYO/TOR	INA	FAG	SKF	MCGILL	Descripion
NAX	-	NKX	NAXK	NKX	-	Comb NR with Thrust Ball Bearing
NAX...Z	-	NKX...Z	NAXK...Z	NKX...Z	-	Comb NR with Thrust Ball & Cover
NBX	-	NKXR	NAXR	NKXR	-	Comb NR with Thrust Roller Bearing
NBX...Z	-	NKXR...Z	NAXR...Z	NKXR...Z	-	Comb NR with Trust Roller & Cover
NTB	AXK	AXK	AXK	AXK	-	NR - Thrust
NUCF...R	-	NUKR	-	-	MCFD	CF- Cyl. Roller, Hex Crowned Outer Ring
NURT	-	NUTR...X	-	-	MCYRD...X	RF - Full comp, cyl. Roller, cyl outer ring
NURT...R	-	NUTR	-	-	MCYRD	RF - Full comp, cyl. Roller, crowned outer ring
RNA	RNA	RNA	RNA	RNA	-	NR w/o Inner Ring
RNAF	-	RNAO	RNAO	RNAO	-	NR - w/o Inner Ring
TAF	NK	NK	NK	NK	-	NR - Machined w/o Inner Ring
TAFI	NKJ	NKI	NKJ	NKI	-	NR - Machined wit Inner Ring
TLA	HK	HK	HK	-	-	NR - Shell type
TLAM	BK	BK	BK	BK	-	NR - Shell type, closed end
WS	WS	WS	WS	WS	-	NR - Thrust, inner ring, Shaft washer
YB	Y	SN	-	-	-	BR - Full Comp
UU*	2RS	2RS / PP	2RS / 2LS	2RS	SS	Sealed

Every effort has been taken to ensure that the data listed in this catalogue is correct.
Finer Power Transmissions P/L will not accept liability for any damage or loss caused as a result of the data in this catalogue.

Premium Deep Groove Ball Bearing Specials

PREMIUM DEEP GROOVE BALL BEARINGS SPECIALS

Imperial Premium Ball Bearings **7.5.4**

RLS & RMS Series 7.5.4

R Series 7.5.5

Non-Standard Bores **7.5.6**

6200 Series 7.5.6

Wide Section Ball Bearings **7.5.8**

Interchange Charts **7.5.9**

Deep Groove Ball Bearings - Imperial 7.5.9

Every effort has been taken to ensure that the data listed in this catalogue is correct.
Finer Power Transmissions P/L will not accept liability for any damage or loss caused as a result of the data in this catalogue.

RLS & RMS Series

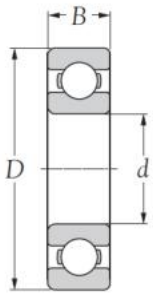

Open

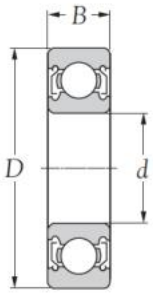

Shielded type (ZZ)

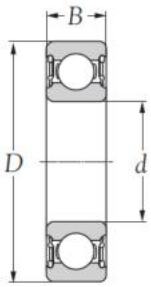

Sealed type (2RS)

Boundary dimension (mm)			Basic load ratings (N)		Limiting speeds		Bearing Numbers			Mass (kg)
d	D	B	dynamic Cr	static Cor	grease rpm	oil				
1/2	1 5/16	3/8	5162	3026	21000	28500	RLS 4	RLS 4 ZZ	RLS 4 2RS	0.037
	1 5/8	5/8	9034	5607	18500	25000	RMS 4	RMS 4 ZZ	RMS 4 2RS	0.096
5/8	1 9/16	7/16	7387	4361	18000	24000	RLS 5	RLS 5 ZZ	RLS 5 2RS	0.059
	1 13/16	5/8	9345	5607	16500	22000	RMS 5	RMS 5 ZZ	RMS 5 2RS	0.117
3/4	1 7/8	9/16	10547	6542	15500	21000	RLS 6	RLS 6 ZZ	RLS 6 2RS	0.109
	2	11/16	12193	7788	14700	20000	RMS 6	RMS 6 ZZ	RMS 6 2RS	0.156
7/8	2	9/16	10725	6542	14300	19500	RLS 7	RLS 7 ZZ	RLS 7 2RS	0.116
	2 1/4	11/16	14196	9123	13300	18000	RMS 7	RMS 7 ZZ	RMS 7 2RS	0.197
1	2 /14	5/8	13795	8900	12700	17000	RLS 8	RLS 8 ZZ	RLS 8 2RS	0.169
	2 1/2	3/4	16332	10547	12200	16500	RMS 8	RMS 8 ZZ	RMS 8 2RS	0.262
1 1/8	2 1/2	5/8	14997	10013	11700	15500	RLS 9	RLS 9 ZZ	RLS 9 2RS	0.22
	2 13/16	13/16	22695	15842	10800	14500	RMS 9	RMS 9 ZZ	RMS 9 2RS	0.347
1 1/4	2 3/4	11/16	20470	13929	10600	14400	RLS 10	RLS 10 ZZ	RLS 10 2RS	0.276
	3 1/5	7/8	27902	19536	9800	13200	RMS 10	RMS 10 ZZ	RMS 10 2RS	0.476
1 3/8	3	11/16	23051	15842	9800	13200	RLS 11	RLS 11 ZZ	RLS 11 RS	0.333
	3 1/2	7/8	33598	23852	8800	11900	RMS 11	RMS 11 ZZ	RMS 11 2RS	0.608
1 1/2	3 1/4	3/4	25810	17889	9000	12200	RLS 12	RLS 12 ZZ	RLS 12 2RS	0.418
	3 3/4	15/16	36490	26211	8200	11000	RMS 12	RMS 12 ZZ	RMS 12 2RS	0.753
1 5/8	4	15/16	40495	30038	7700	10300	RMS 13	RMS 13 ZZ	RMS 13 2RS	0.857
1 3/4	3 3/4	13/16	31595	22339	7800	10600	RLS 14	RLS 14 ZZ	RLS 14 2RS	0.594
	4 1/4	1 1/16	43254	31195	7100	9600	RMS 14	RMS 14 ZZ	RMS 14 2RS	1.061
1 7/8	4	13/16	37380	27857	7200	9800	RLS 15	RLS 15 ZZ	RLS 15 2RS	0.78
2	4	13/16	37558	27857	7200	9800	RLS 16	RLS 16 ZZ	RLS 16 2RS	0.667
	4 1/2	1 1/16	51175	38715	5900	8000	RMS 16	RMS 16 ZZ	RMS 16 2RS	1.175
2 1/4	5	1 1/4	62745	48505	4600	6200	RMS 18	RMS 18 ZZ	RMS 18 2RS	1.601

Every effort has been taken to ensure that the data listed in this catalogue is correct.
Finer Power Transmissions P/L will not accept liability for any damage or loss caused as a result of the data in this catalogue.

R Series

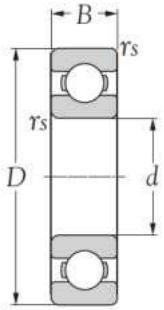

Open

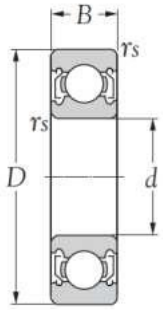

Shielded type (ZZ)

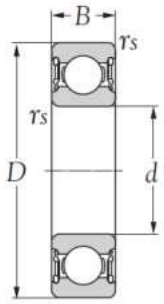

Sealed type (2RS)

Boundary dimension (mm)				Basic load ratings (N)		Limiting speeds		Bearing numbers			Mass (kg)
d	D	B	r	dynamic	static	grease	oil	open	w/ Shields	w/ seals	
				Cr	Cor	rpm					
1/8	9.525	3.967 (5/32)	0.3	630	218	56000	67000	R 2	-	-	0.0012
	3/8	3.967 (5/32)					-	-	R 2 ZZ	R 2 2RS	0.0014
3/16	12.7	3.967 (5/32)	0.3	1310	490	41000	48000	R 3	-	-	0.0032
	1/2	4.978 (13/64)					-	-	R 3 ZZ	R 4 2RS	0.0024
1/4	15.875	3.967 (5/32)	0.4	1480	615	36000	43000	R 4	-	-	0.0040
	5/8	4.978 (13/64)					-	-	R 4 ZZ	R 4 2RS	0.0044
1/4	19.050	5.556 (7/32)	0.4	1480	615	36000	43000	R 4A			0.004
	3/4	7.142 (9/32)							R 4A ZZ	R 4A 2RS	0.004
3/8	22.525	5.556 (7/32)	1.0	3300	1400	31000	37000	R 6	-	-	0.0136
	7/8	7.142 (9/32)					-	-	R 6 ZZ	R 6 2RS	0.0140
1/2	28.575	6.350 (1/4)	1.0	3950	2250	26000	31000	R 8	-	-	0.0165
	1 1/8	7.938 (5/16)					-	-	R 8 ZZ	R 8 2RS	0.0180
5/8	34.925	7.140 (9/32)	1.0	4600	2800	21000	25000	R 10	-	-	0.0340
	1 3/8	8.733 (11/32)					-	-	R 10 ZZ	R 10 ZZ	0.0370
3/4	41.275	7.938 (5/16)	1.0	7250	4450	16000	21000	R 12	-	-	0.0440
	1 5/8	11.112 (7/16)					-	-	R 12 ZZ	R 12 ZZ	0.0470
7/8	47.62	9.525(3/8)	1	7250	4950	12000	16000	R 14	-	-	0.07
	1 7/8	12.7 (1/2)					-	-	R 14 ZZ	R 14 2RS	0.072
1	50.8	9.525(3/8)	1	8250	5450	11000	15000	R 16	-	-	0.081
	2	12.7 (1/2)					-	-	R 16 ZZ	R 16 2RS	0.085
1 1/8	53.975	9.525 (3/8)	1	9600	6260	10000	13000	R 18	-	-	0.086
	2 1/8	12.7 (1/2)					-	-	R 18 ZZ	R 18 2RS	0.09
1 1/4	57.15	9.525(3/8)	1	10800	7520	9000	11000	R 20	-	-	0.09
	2 1/4	12.700 (1/2)					-	-	R 20 ZZ	R 20 2RS	0.095
1 1/2	66.67	11.112(7/16)	1	13150	9450	6000	7500	R 24	-	-	0.136
	2 5/8	14.288 (9/16)					-	-	R 24 ZZ	R 24 2RS	0.14

Every effort has been taken to ensure that the data listed in this catalogue is correct.
Finer Power Transmissions P/L will not accept liability for any damage or loss caused as a result of the data in this catalogue.

FINERPOWER TRANSMISSIONS
Finer Power Transmissions P/L | www.finerpt.com
Non-Standard Bores

6200 Series

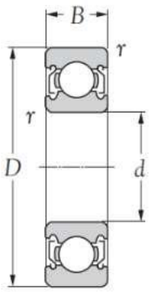

Shielded type
(ZZ)

Sealed type
(2RS)

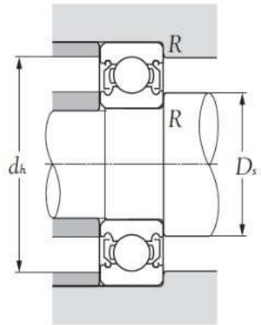

6200 Series

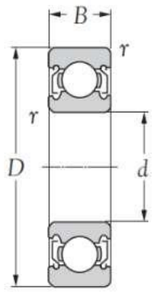

Shielded type
(ZZ)

Sealed type
(2RS)

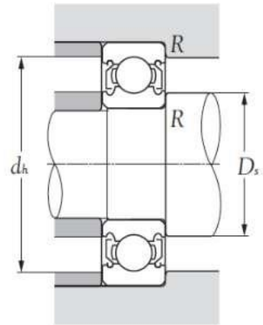

Boundary dimension (mm)				Basic load ratings (N)		Limiting speeds			Bearing numbers		Abutment and fillet dimensions(mm)				Mass (kg)
				dynamic	static	grease	oil				Ds	Ds	dh	R	
d	D	B	r	Cr	Cor	rpm			ZZ*	2RS	min	max	max	max	
1/2	32	10	0.6	6100	2750	22000	26000		6201-1/2" ZZ	6202-1/2" 2RS	17	17.5	27.000	0.6	0.037
5/8	35	11	0.6	7750	3600	19000	23000		6202-5/8" ZZ	6202-5/8" 2RS	20	20.5	30	0.6	0.045
1/2	35	11	0.6	7750	3600	19000	23000		6202-1/2" ZZ	6202-1/2" 2RS	20	20.5	30	0.6	0.045
16	35	11	0.6	7750	3600	19000	23000		6202-16mm ZZ	6202-16m 2RS	20	20.5	30	0.6	0.045
16	40	12	0.6	9600	4600	18000	21000		6203-16mm ZZ	6203-16mm 2RS	22	23	35	0.6	0.066
1/2	40	12	0.6	9600	4600	18000	21000		6203-1/2" ZZ	6203-1/2" 2RS	22	23	35	0.6	0.066
5/8	40	12	0.6	9600	4600	18000	21000		6203-5/8" ZZ	6203-5/8" 2RS	22	23	35	0.6	0.066
3/4	40	12	0.6	9600	4600	18000	21000		6203-3/4" ZZ	6203-3/4" 2RS	22	23	35	0.6	0.066
3/4	47	14	1	12800	6650	16000	18000		6204-3/4" ZZ	6204-3/4" 2RS	26	28	41	1	0.106
1	47	12	-	-	-	-	-		-	6005-1 2RS	-	-	-	-	-
1	52	15	1	14000	7850	13000	15000		6205-1" ZZ	6205-1" 2RS	31	32	46	1	0.128
3/4	52	15	-	-	-	-	-		-	6205-3/4 2RS	31	32	46	1	0.152

* Not a stocked range although available on request.

Every effort has been taken to ensure that the data listed in this catalogue is correct.
Finer Power Transmissions P/L will not accept liability for any damage or loss caused as a result of the data in this catalogue.
Every effort has been taken to ensure that the data listed in this catalogue is correct.
Finer Power Transmissions P/L will not accept liability for any damage or loss caused as a result of the data in this catalogue.

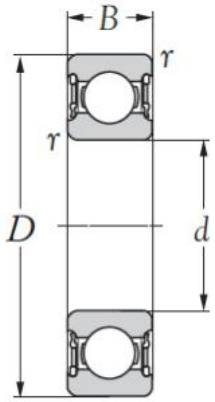

Sealed type
(2RS)

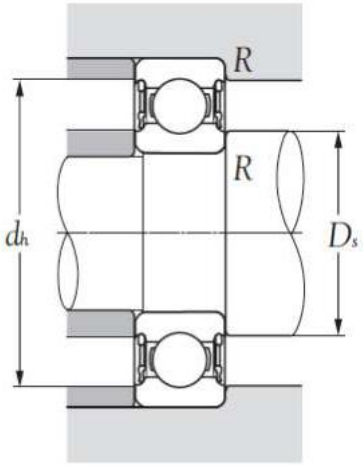

Boundary dimension (mm)				Basic load ratings (N)		speed rating	Bearing numbers	Abutment and fillet dimensions(mm)				Mass (kg)
d	D	B	rs min	dynamic Cr	static Cor	grease (rpm)		Ds min	Ds max	dh max	R max	
10	30	14	0.6	5070	2360	17000	62200 2RS	14	14.5	26	0.6	0.04
12	32	14	0.6	6890	3100	15000	62201 2RS	16	16	28	0.6	0.045
	37	17	1	9750	4150	14000	62301 2RS	17	17	32	1	0.07
15	35	14	0.6	7800	3750	13000	62202 2RS	19	19	31	0.6	0.054
	42	17	1	11400	5400	12000	62302 2RS	20	20	37	1	0.11
17	40	16	0.6	9560	4750	12000	62203 2RS	21	21	36	0.6	0.083
	47	19	1	13500	6550	11000	62303 2RS	22	23	43	1	0.15
20	47	18	0.6	12700	6550	10000	62204 2RS	25	25	42	1	0.13
	52	21	1.1	15900	7800	9500	62304 2RS	26	27	45	1	0.2
25	52	18	0.1	14000	7800	8500	62205 2RS	30	31	47	1	0.15
	62	24	1.1	22500	11600	7500	62305 2RS	31	33	55.5	1	0.32
30	62	20	1	19500	11200	7500	62206 2RS	35	37	57	1	0.24
	72	27	1.1	28100	16000	6300	62306 2RS	36.5	41.5	65.5	1	0.48
35	72	23	1.1	25500	15300	6300	62207 2RS	41.5	43.5	65.5	1	0.37
	80	31	1.5	33200	19000	6000	62307 2RS	43	44	72	1.5	0.66
40	80	23	1.1	30700	19000	5600	62208 2RS	46.5	49.5	73.5	1	0.44
45	85	23	1.1	33200	21600	5000	62209 2RS	51.5	54	78.5	1	0.48
50	90	23	1.1	35100	23200	4800	62210 2RS	56.5	58	83.5	1	0.52
10	26	12	0.3	4620	1960	19000	63000 2RS	12	12.5	24	0.3	0.025
12	28	12	0.3	5070	2360	17000	63001 2RS	14	14.5	26	0.3	0.029
15	32	13	0.3	5590	2850	14000	63002 2RS	17	18.0	30	0.3	0.039
17	35	14	0.3	6050	3250	13000	63003 2RS	19	20.0	33	0.3	0.052
20	42	16	0.6	9360	5000	11000	63004 2RS	24	24.5	38	0.6	0.086
25	47	16	0.6	11200	6550	9500	63005 2RS	29	29.0	43	0.6	0.100
30	55	19	1.0	13300	8300	8000	63006 2RS	35	35.5	50	1	0.160
35	62	20	1.0	15900	10200	7000	63007 2RS	40	40.5	57	1	0.210

Every effort has been taken to ensure that the data listed in this catalogue is correct.
Finer Power Transmissions P/L will not accept liability for any damage or loss caused as a result of the data in this catalogue.

Deep Groove Ball Bearings - Imperial

Finer Part #	FAG Part #	RHP Part #	SKF Part #	STEYR Part #
RLS4	LS5	LJ 1/2	RLS4	RLS4
RLS5	LS7	LJ 5/8	RLS5	RLS5
RLS6	LS8	LJ 3/4	RLS6	RLS6
RLS7	LS9	LJ 7/8	RLS7	RLS7
RLS8	LS10	LJ 1 E	RLS8	RLS8
RLS9	LS11	LJ 1 1/8	RLS9	RLS9
RLS10	LS12	LJ 1 1/4	RLS10	RLS10
RLS11	LS12 1/2	LJ 1 3/8	RLS11	RLS11
RLS12	LS13	LJ 1 1/2	RLS12	RLS12
RLS14	LS13 1/2	LJ 1 3/4	RLS14	RLS14
RLS16	LS15	LJ 2 E	RLS16	RLS16
RMS4	MS5	MJ 1/2	RMS4	RMS4
RMS5	MS7	MJ 5/8	RMS5	RMS5
RMS6	MS8	MJ 3/4	RMS6	RMS6
RMS7	MS9	MJ 7/8	RMS7	RMS7
RMS8	MS10	MJ 1 E	RMS8	RMS8
RMS9	MS11	MJ 1 1/8	RMS9	RMS9
RMS10	MS12	MJ 1 1/4	RMS10	RMS10
RMS11	MS12 1/2	MJ 1 3/8	RMS11	RMS11
RMS12	MS13	MJ 1 1/2	RMS12	RMS12

Finer Part #	FAG Part #	SKF Part #	MRC Part #	FAFNIR Part #
R2	R-2	EE0	R-2	33-K-3
R3	R-3	EE1	R-3	33-K-5
R4	R-4	EE2	R-4	S-1-K-7
R6	R-6	EE3	R-6	S-3-K
R8	R-8	EE4	R-8	S-5-K
R10	R-10	EE5	R-10	S-7-K
R12	R-12	EE6	R-12	S-8-K
EE7	-	-	-	-
R14	R-14	EE8	R-14	S-9-K
R16	R-16	EE9	R-16	S-10-K
R18	R-18	EE10	R-18	S-11-K
R20	R-20	EE11	R-20	S-12-K
R4A	R-4-A	-	R-4-A	S-1-K

Every effort has been taken to ensure that the data listed in this catalogue is correct.
Finer Power Transmissions P/L will not accept liability for any damage or loss caused as a result of the data in this catalogue.